Flexco Slider/Impact Bed

Installation, Operation and Maintenance Manual

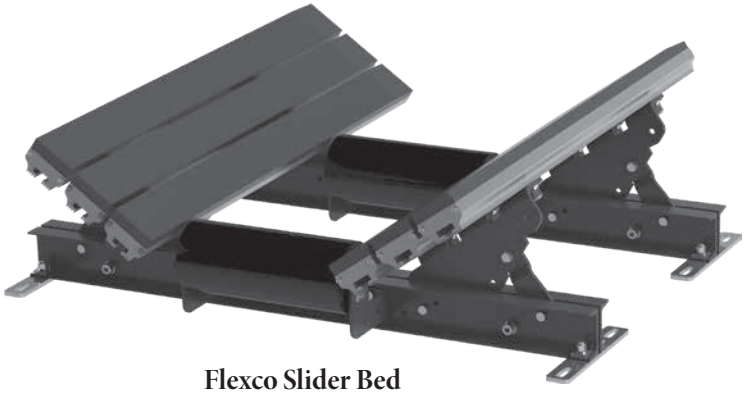

Flexco Slider Bed
(EZSB-C shown)

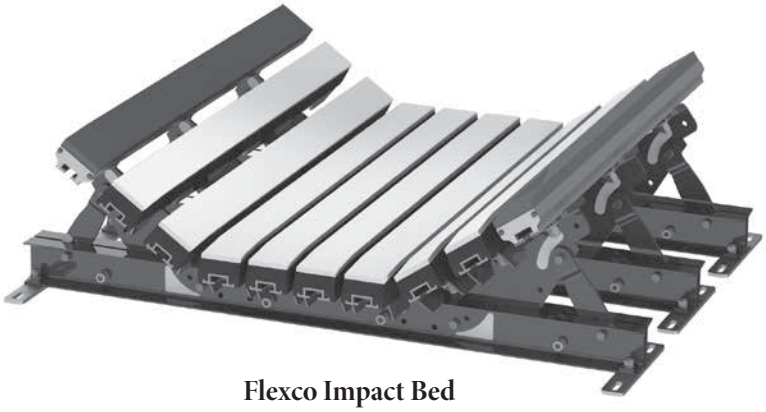

Flexco Impact Bed
(EZIB-M shown)

Serial Number: _____

Purchase Date: _____

Purchased From: _____

Installation Date: _____

Serial number information can be found on the Serial Number Label included in the Information Packet shipped with the impact bed.

This information will be helpful for any future inquiries or questions about replacement parts, specifications or troubleshooting.

Table of Contents

Section 1 - Important Information

1.1 General Introduction

We at Flexco are very pleased that you have selected a Flexco Slider Bed or Impact Bed for your conveyor system.

This manual will help you to understand the operation of this product and assist you in making it work up to its maximum efficiency over its lifetime of service.

It is essential for safe and efficient operation that the information and guidelines presented be properly understood and implemented. This manual will provide safety precautions, installation instructions, maintenance procedures and troubleshooting tips.

If, however, you have any questions or problems that are not covered, please visit our web site or contact our Customer Service Department:

Customer Service: 49-7428-9406-0

Visit www.flexco.com for other Flexco locations and products.

Please read this manual thoroughly and pass it on to any others who will be directly responsible for installation, operation and maintenance of this cleaner. While we have tried to make the installation and service tasks as easy and simple as possible, it does however require correct installation and regular inspections and adjustments to maintain top working condition.

1.2 User Benefits

The "transfer point" is integrally important to the successful operation of a belt conveyor system. The material transferred from one conveyor (or other source) to another conveyor must be done without damaging the conveyor's key component...the belt. A correctly-selected impact bed is critical for this task.

Since material size, weight and the drop height can cause considerable impact force that can damage the belt, the right impact bed must be chosen to absorb the impact energy and minimize any damage to the beltline.

The proper impact bed can also support the belt in the loading zone to prevent material spillage.

1.3 Proper Impact Bed Selection

Flexco Impact beds are expressly designed to absorb energy from falling materials. The bed model should be spec'd to the needs of the conveyor application. To do this, the following data points are needed (Also see the Flexco Impact Bed Spec Sheet on Page 7).

1. **Belt Width** - This is typically a simple check and the only additional information that would be required is if belt width is inconsistent with structure width.

2. **Troughing Angle** - What is the angle of the current bed or troughing set?

3. **Roller Diameter and CEMA Rating** - Rollers are typically 125 or150mm (5" or 6") and rated CEMA C, D or E.

4. **Bed Length** - Typically 1.2M or 1.5M (4' or 5'). Special lengths available upon request.

5. **Drop Height and Lump Size & Weight** - This is the critical information required.
   NOTE: Flexco Slider Bed with rolls not for use in impact zone.

   a. **Drop Height** - The measurement from where the material leaves the feeding conveyor to where it makes contact with the receiving conveyor.

   b. **Lump Size and Weight** - The lump size - The largest dimension of the material pieces dropping. The material weight is of the largest lump size found and weighed.

   c. **Chart for Rough Calculations** - Weighing is always more accurate, but the chart values will give a rough weight estimate.

Material	kg/m³
Coke	657
Fertilizer	961
Bauxite, crushed	1282
Potash	1282
Coal, Bituminous, Solid	1346
Coal, Anthracite, Solid	1506
Slag, Solid	2114
Chromium Ore	2163
Halite (Salt), Solid	2323
Phosphorus	2339
Stone (Common, Generic)	2515
Limestone, Solid	2611
Shale, Solid	2675
Granite, Solid	2691
Gypsum, Solid	2787
Trap Rock, Solid	2883
Dolomite, Solid	2899
Malachite (Copper Ore)	3860
Platinum Ore	4293
Hematite (Iron Ore)	5158

Now you can calculate the impact energy (in lb.-ft.) and make the bed selection by the rating chart.

Impact Energy Calculation Chart

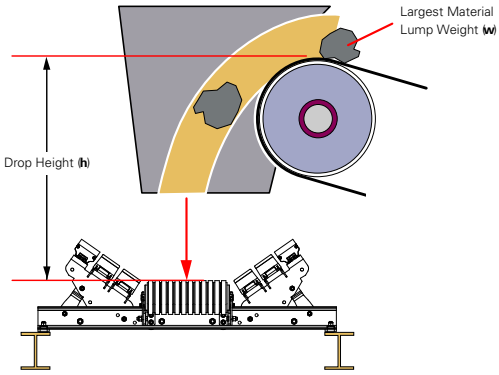

By using this simple lb-ft formula, for whatever your application, you will know the load capacities needed to specify the best DRX™ Impact Bed to get the job done right.

Calculate Impact Energy:

Lump weight _____ *kg*

x Drop length _____ *m*

Total _____ *kg-m*

Match lb-ft to bed rating:

0 kg-m (0 lb-ft)..... EZSB-C
0-25 kg-m (0-200 lb-ft)..... EZSB-I or EZIB-L
25-100 kg-m (200-750 lb-ft)..... EZIB-M

A sample Impact Bed Spec Sheet is included (Page 7) for future use.

1.4 Selecting the Right Impact Bar

The primary purpose of the impact bars is to absorb the energy of the falling material and prevent damage to the belt. They are the first line of defense. Typical impact bars can be purchased with a 13mm (1/2") UHMW top cover or with a longer-wearing 25mm (1") top cover. Care should be taken to choose the right top cover thickness for your application to ensure maximum energy absorption.

Generally, impact bars are 75mm (3") high and 100mm (4") wide. They are made up of an aluminum extrusion base, an elastomer (rubber) center, and a low-friction (UHMW) top cover. The extrusion takes up about 25mm (1") of the bar's height. That means that depending on the thickness of the top cover chosen (13mm or 25mm), the energy-absorbing rubber core is either 38mm (1-1/2") or 25mm (1"). Reducing the rubber core of each bar by 50% in heavier impact applications can reduce the impact bed's effectiveness and performance.

Some general guidelines:

1. If the impact bed's primary use is for dust suppression with no sizeable amount of impact (for loads not exceeding 48.5 kg-m of impact energy), choose the 25mm (1") top cover. It will offer twice the service life with no measurable performance degradation.

2. For applications with 48.5 kg-m or more of impact force, the 13mm (1/2") top cover is strongly recommended. It will provide 50% more energy impact protection for the belt.

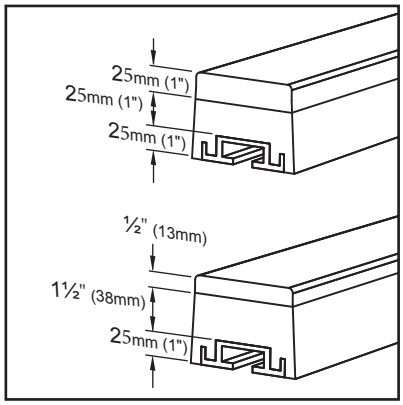

1.5 Installation and Service Option

The Flexco Impact Bed is designed to be easily installed and serviced by your on-site personnel. However, if you would prefer complete turn-key factory service, please contact your local Flexco Field Engineer or your Flexco Distributor.

1.6 Flexco Impact Bed Spec Sheet

CUSTOMER INFO:

Company Name: _____

Address: _____ Date: _____

_____ Phone #: _____

Contact Name: _____ Fax #: _____

Title/Position: _____ e-Mail: _____

Converyor Name: _____ PO #: _____ Distributor: _____

_____ A Mounting Bolt Center-to-Center

_____ B Center Roll Height Above Mounting Base

_____ C Inside Structure Dimension

_____ D Trough Angle

_____ E Belt Width

_____ F Length of Load Zone

_____ G Material

_____ H Drop Height

_____ _____ _____ I Maximum Lump Size
Length Width Height

_____ J Tons per Hour

_____ K Belt Speed

_____ W Maximum Lump Weight

_____ Idler Length 1

_____ Idler Length 2

_____ Idler Length 3

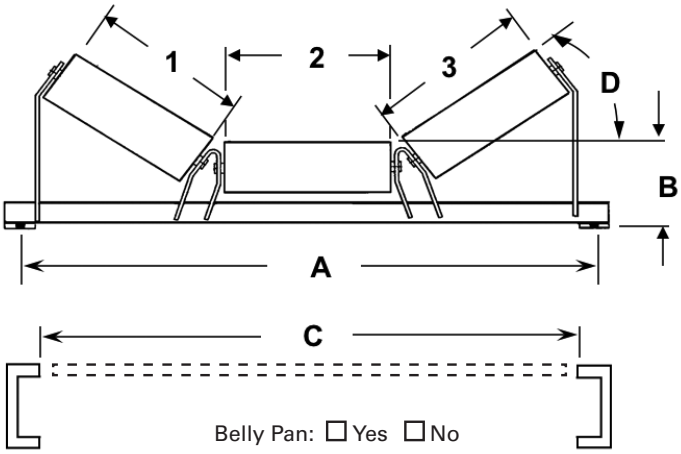

Impact Energy Calculation Chart

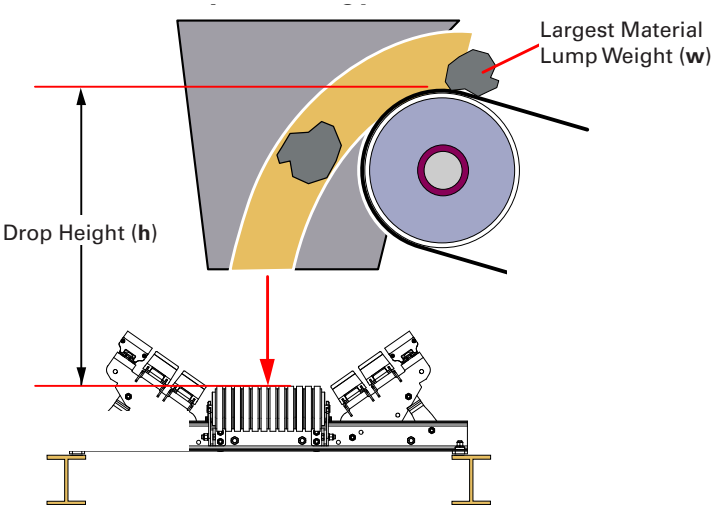

Impact Energy

Lump Weight **(w)** _____

Drop Height **(h)** x _____

Total - **kg-m (lb-ft)** _____

See below for bed recommendation/selection

Bed Selection:

No impact ☐ **EZSB-C**

Up to 25 kg-m (200 lb-ft) ☐ **EZSB-I** ☐ **EZIB-L**

25 to 100 kg-m (200 to 750 lb-ft) ☐ **EZIB-M**

Section 2 - Safety Considerations and Precautions

Before installing and operating the Flexco Slider/Impact Bed, it is important to review and understand the following safety information.

There are set-up, maintenance and operational activities involving both **stationary** and **operating** conveyors. Each case has a safety protocol.

2.1 Stationary Conveyors

The following activities are performed on stationary conveyors:

- Installation
- Skirt rubber adjustments
- Impact bar replacement
- Cleaning
- Repairs

⚠ DANGER

It is imperative that OSHA/MSHA Lockout/Tagout (LOTO) regulations, 29 CFR 1910.147, be followed before undertaking the preceding activities. Failure to use LOTO exposes workers to uncontrolled behavior of the impact bed caused by movement of the conveyor belt. Severe injury or death can result.

Before working:

- Lockout/Tagout the conveyor power source
- Disengage any takeups
- Clear the conveyor belt or clamp securely in place

⚠ WARNING

Use Personal Protective Equipment (PPE):

- Safety eyewear
- Hardhats
- Safety footwear

Close quarters and heavy components create a worksite that compromises a worker's eyes, feet and skull.
PPE must be worn to control the foreseeable hazards associated with conveyor belt components. Serious injuries can be avoided.

2.2 Operating Conveyors

There are two routine tasks that must be performed while the conveyor is running:

- Inspection of the sealing performance
- Dynamic troubleshooting

⚠ DANGER

Every belt conveyor is an in-running nip hazard. Never touch or prod an operating impact bed. Conveyor hazards cause instantaneous amputation and entrapment.

⚠ WARNING

Never adjust anything on an operating impact bed. Unforseeable materials falling into the chute can cause violent movements of the impact bed structure. Flailing hardware can cause serious injury or death.

⚠ WARNING

Conveyor chutes contain projectile hazards. Stay as far from the impact bed as practical and use safety eyewear and headgear. Missiles can inflict serious injury.

Section 3 - Pre-Installation Checks and Options

3.1 Checklist

- Check the model and size of the impact bed. Is it the right one for your beltline?
- Check the bed to be sure all the parts are included in the shipment.
- Find the Information Packet in the shipment.
- Review the "Tools Needed" section on the front of the installation instructions.
- Prepare the conveyor site:
  - Lift the belt in the transfer zone. Use a lifting hoist or Flexco's Belt Lifters.
  - Remove the old impact bed or impact idlers.
  - Inspect the conveyor structure for damage or misalignment. Make adjustments as necessary.
  - Troughing idlers should be installed directly before and after the new impact bed.

3.2 Optional Installation Accessories

Optional tools can make the installation of the DRX™ Impact Bed easier and faster.

Flex-Lifter™ Conveyor Belt Lifter

Description	Ordering Number	Item Code
Medium Flex-Lifter™ 900 - 1500mm (36" - 60")	FL-M	76469
Large Flex-Lifter 1200 - 1800mm (48" - 72")	FL-L	76470
XL Flex-Lifter 1800 - 2400mm (72" - 96")	FL-XL	76983

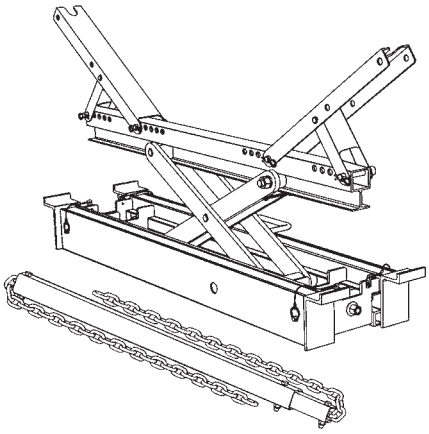

Flex-Lifter™ Conveyor Belt Lifter
The Flexco® Flex-Lifter makes the job of lifting the conveyor belt easy and safe. Using two Flex-Lifters, the belt can be quickly lifted out of the way to install the impact bed. The
Flex-Lifter has the highest safe lift rating available at 1800 kg (4000 lbs.) on Medium and Large, and 2725 kg (6000 lbs.)
on XL. And it's versatile. It can also be used to lift topside or return side belt for splicing, roller replacement or other maintenance jobs. Available in three sizes: Medium for belt widths 3900 - 1500mm (36" - 60"), Large for belt widths 1200 - 1800mm (48" - 72"), and XL for belt widths 1800 - 2400mm (72" - 96").

Impact Bed Shim Kits

Description	Ordering Number	Item Code	Wt. Kg.
Shim Kit - L	SHIM-KITL	77548	6.2
Shim Kit - M	SHIM-KITM	77549	9.3

Shims
Depending on your idler rating and size, shimming may be required. See charts below for quantity of kits required.

Impact Bed Handy Wrench

Description	Ordering Number	Item Code	Wt. Kg.
Impact Bed Handy Wrench	HW-IMPB	76939	0.7

Impact Bed Handy Wrench
A handy ratcheting wrench with two common sizes (19mm and 24mm or 3/4" and 15/16") for easier installation and maintenance of impact beds.

Shim Chart - CEMA C or D Idlers

Model	Impact Bed Size	Cema C or D, 125mm (5") IDLERS	Cema C or D, 150mm (6") IDLERS
EZSB-C, EZSB-I, EZIB-L	600-900mm (24"-36")	Shim idler up 13mm (1/2")	No Kits Required
	1050-1800mm (42"- 72")	No Kits Required	Use (1) SHIM-KITL; Shim up 13mm (.5")
EZIB-M	600-900mm (24"-36")	Shim idler up 13mm (1/2")	No Kits Required
	1050-1800mm (42"- 72")	No Kits Required	Use (1) SHIM-KITM; Shim up 13mm (.5")

Shim Chart - CEMA E Idlers

Model	Impact Bed Size	CEMA E, 150mm (6") IDLERS	CEMA E, 175mm (7") IDLERS
EZSB-C, EZSB-I, EZIB-L	600-1500mm (36"-60")	Use (3) SHIM-KITL; Shim up 38mm (1.5")	Use (4) SHIM-KITL; Shim up 50mm (2")
	1800mm (72")	Use (4) SHIM-KITL; Shim up 50mm (2")	Use (5) SHIM-KITL; Shim up 2.5" (63mm)
EZIB-M	600-1500mm (36"-60")	Use (3) SHIM-KITM; Shim up 38mm (1.5")	Use (4) SHIM-KITM; Shim up 50mm (2")
	1800mm (72")	Use (4) SHIM-KITM; Shim up 50mm (2")	Use (5) SHIM-KITM; Shim up 2.5" (63mm)

Section 4 - Installation Instructions

4.1 Flexco Slider/Impact Beds

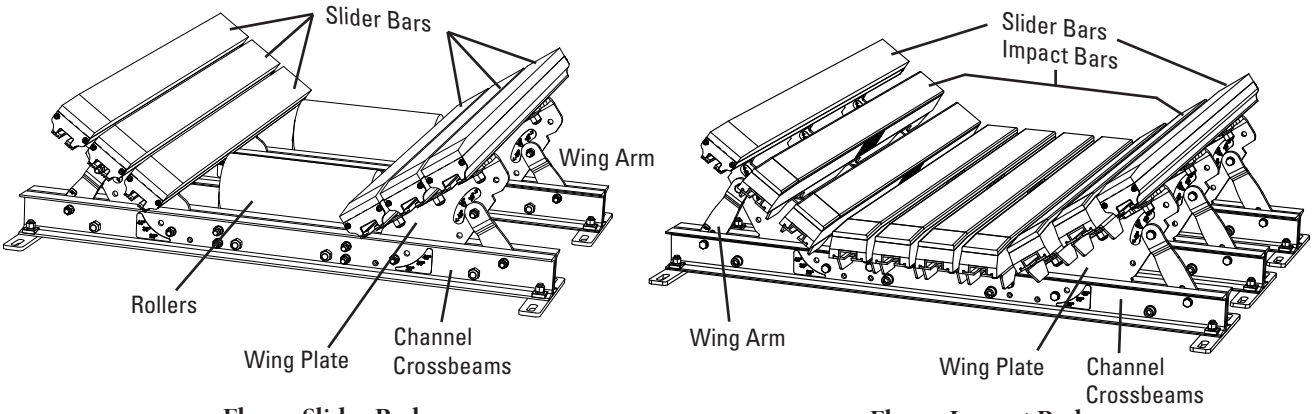

Flexco Slider Bed
(EZSB-C shown)

Flexco Impact Bed
(EZIB-M shown)

Physically lock out and tag the conveyor at the power source before you begin installation.

Caution: Components may be heavy. Use safety approved lifting procedures.

Before Installation: Inspect structure; confirm CEMA rating. Shim bed or idlers per Table 1. NOTE: Installation of an idler is required 25-150mm (1"-6") before and after a Flexco Slider or Impact Bed. If more than one impact bed is used, idlers should be installed between every one or two beds.

If CEMA rating is unknown, measure the lead and trail idler for height from the top of center roll to the top of conveyor structure. Table 2 shows the nominal center height required for the idler based on belt width. If incorrect, shim idler(s) to the height shown in Table 2.

Table 1: Shim Requirements

Idler Diameter (CEMA C or D)	600-900mm (24"-36") Belt Width	1050-1800mm (42"-72") Belt Width
125mm (5")	Idler up 13mm (1/2")	No shim
150mm (6")	No shim	Bed up 13mm (1/2")
Idler Diameter (CEMA E)	**900-1500mm (36"-60") Belt Width**	**1800mm (72") Belt Width**
150mm (6")	Bed up 38mm (1.5")	Bed up 50mm (2")
175mm (7")	Bed up 50mm (2")	Bed up 64mm (2.5")

Table 2: Nominal Center Roll Height

Belt Width	600-1200mm (24"- 48")	1350-1500mm (54"- 60")	1800mm (72")
Height	229mm (9")	235mm (9-1/4")	241mm (9-1/2")

Tools Needed:
- Welder
- Grease Pencil
- Tape Measure
- Cutting torch
- 90° square
- 19mm (3/4") open-ended wrench
- 19mm (3/4") and 24mm (15/16") deep sockets with socket wrench or impact wrench
- Flex-Lifter™ (helpful)

1. **Free the area of previous system.** Remove material (idlers, etc.) from the area of desired installation. Loosen or remove skirting material for extra space. If available, use Flex-Lifters before and after the load zone to lift the belt out of the way.

2. **Visually locate center of loading zone.** Determine the center of the load zone on the side of the structure and mark (Fig. 2). Mark and measure from the end of template to a fixed point on the structure, then transfer this dimension to the opposite side of the structure.

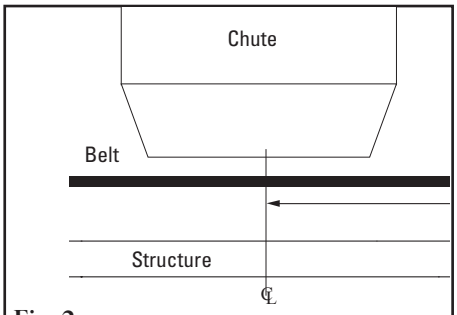

Fig. 2

4.1 Flexco Slider/Impact Beds (cont.)

3. **Locate mounting templates.** Measure and mark where the center of the template will sit on the structure by measuring belt width + 230mm (9") and centering this on the structure (Fig. 3a). Often this can be centered on the holes left from the previous idlers. Lengthwise, center template over the center mark from Step 2. Align notches on mounting templates with marks on structure and mark all the holes (Fig. 3b). Drill or torch holes. Included mounting bolts should fit freely through the holes.

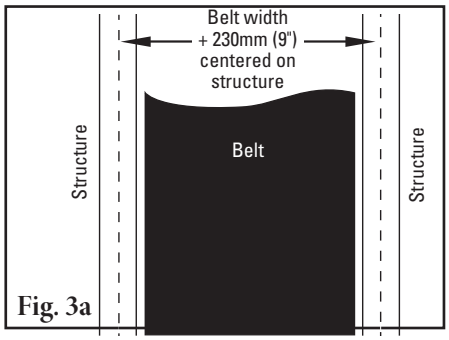

Fig. 3a

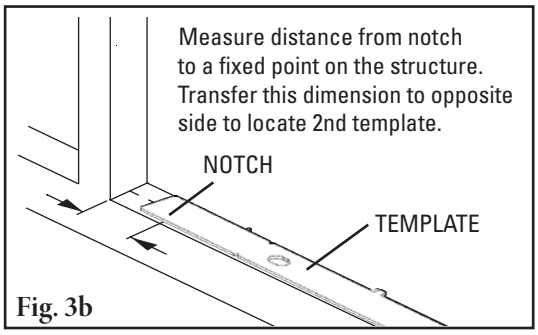

Fig. 3b

If installing a slider bed:

4S. **Bed Preparation - lower wing plates, install idler.** All beds come preset with a 35° trough. If 35° trough is preferred setting, loosen bolts at base of wing arms and wing plates. Remove bolt between wing arms and wing plates. Rotate wing arms and wing plates down (Fig. 4S-a).

If 20° or 45° trough is preferred setting, remove bolts (Fig. 4S-b). Reassemble bolts loosely at base of wing arms and wing plates in the correct holes for 20° or 45° trough per affixed labels (Fig. 4S-c). Confirm correct setting as shown below (Fig. 4S-d). Confirm crossbeam assembly is ready for assembly installation to conveyor (Fig. 4S-e).

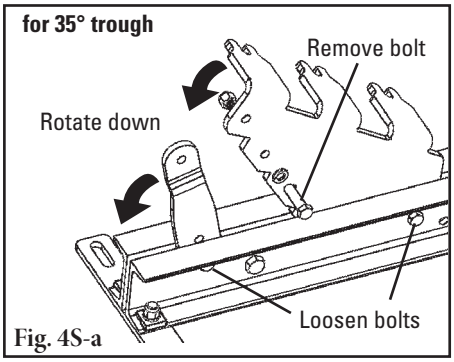

Fig. 4S-a

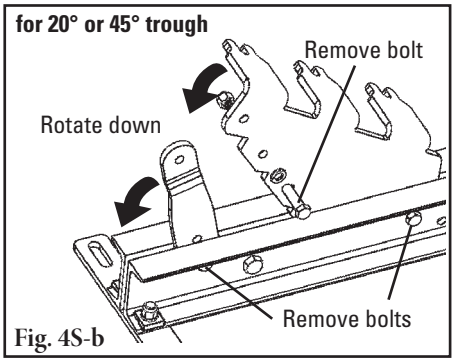

Fig. 4S-b

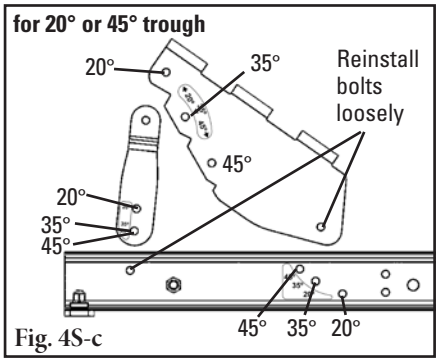

Fig. 4S-c

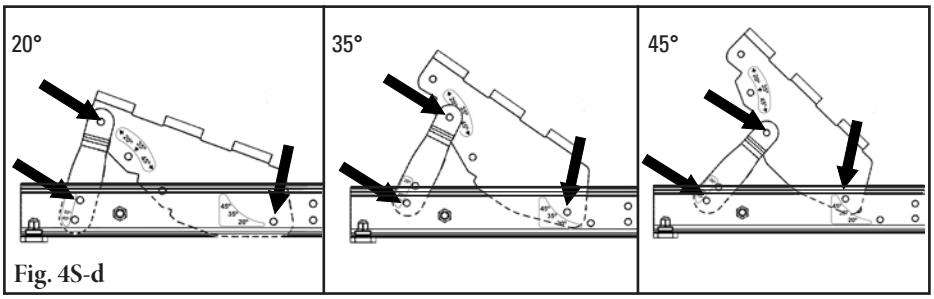

Fig. 4S-d

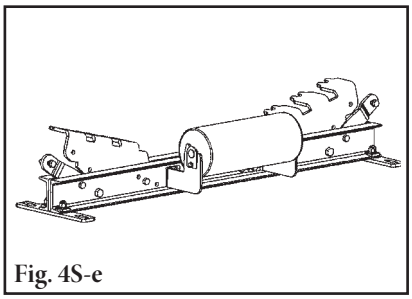
Fig. 4S-e

4.1 Flexco Slider/Impact Beds (cont.)

5S. Install channel crossbeams. Position all channel crossbeams onto the conveyor structure with the tabs on the wing plates facing the tail pulley, aligning with the mounting holes from Step 3. Insert the channel crossbeam mounting bolt and leave finger tight (Fig. 5S). Use shim under mounting plate if needed (Table 1). Verify the height of center roller on leading and trailing idlers (Table 2).

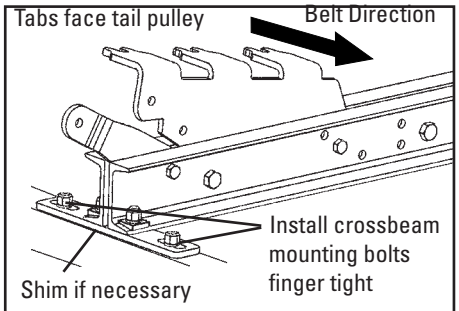

Fig. 5S

Table 1: Shim Requirements

Idler Diameter (CEMA C or D)	600-900mm (24"-36") Belt Width	1050-1800mm (42"-72") Belt Width
125mm (5")	Idler up 13mm (1/2")	No shim
150mm (6")	No shim	Bed up 13mm (1/2")
Idler Diameter (CEMA E)	**900-1500mm (36"-60") Belt Width**	**1800mm (72") Belt Width**
150mm (6")	Bed up 38mm (1.5")	Bed up 50mm (2")
175mm (7")	Bed up 50mm (2")	Bed up 64mm (2.5")

6S. Square up all channel crossbeams. With a square, ensure the first channel crossbeam is perpendicular to the conveyor structure and belt, then tighten in place. Next, space the remaining channel crossbeams with the correct center-to-center spacing. Use tabs on provided template to set spacing (Fig. 6S-a). If this is not possible, use dimensions in Table 3 (Fig. 6S-b). Tighten all bolts in place. **Note:** Center-to-center spacing must be maintained to within +/- 3mm (1/8").

Table 2: Nominal Center Roll Height

Belt Width	600-1200mm (24"- 48")	1350-1500mm (54"- 60")	1800mm (72")
Height	229mm (9")	235mm (9-1/4")	241mm (9-1/2")

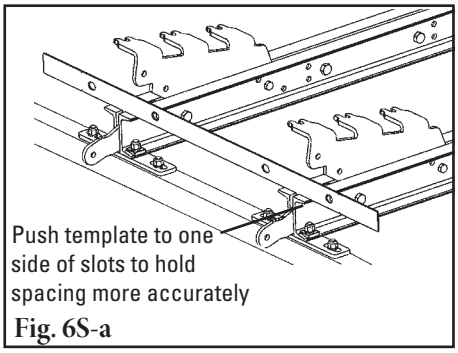

Fig. 6S-a

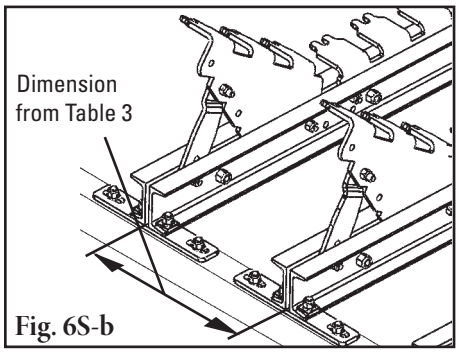

Fig. 6S-b

Table 3: Center-to-center (C-C) Dimensions

Bed Model	1.2M (4')	1.5M (5')
EZSB-C	660mm (26")	864mm (34")
EZSB-I	660mm (26")	864mm (34")

7S. Install idlers. If idlers were removed at any point during installation, reinstall now.

8S. Install impact/slider bars to wing plates. Starting with the innermost bars, set the bars in place. Position the studs between the tabs in the wing assembly while confirming the chamfer of the bar is positioned facing the tail pulley (Fig. 8S). See below for bar assembly configuration based on bed model.

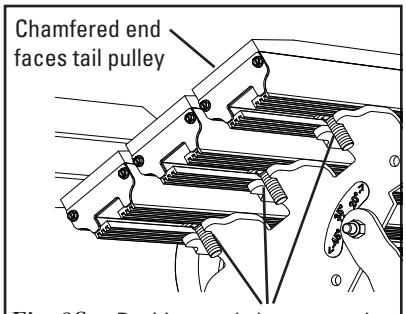

Fig. 8S Position studs between tabs

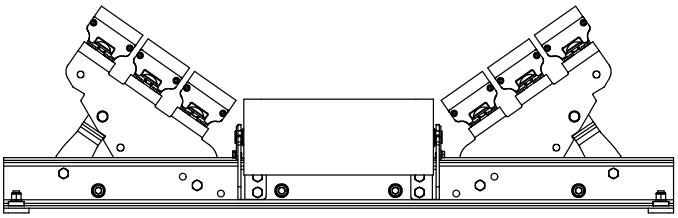

EZSB-C has 2 idlers under center. All (purple) slider bars on side troughs.

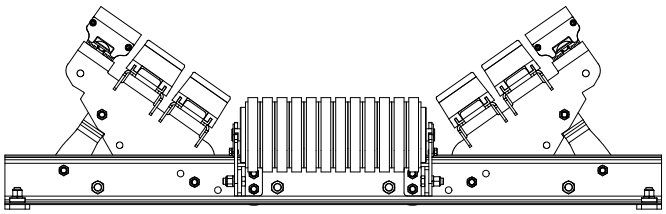

EZSB-4I has 4 impact idlers under center, and EZSB-5I has 5. All (white) impact bars with support bars on side troughs, except last outboard (purple) slider bar on each side.

4.1 Flexco Slider/Impact Beds (cont.)

9S. Fasten all impact bars. With all impact bars correctly positioned on the wing assemblies, install on each stud a flat washer, lock washer and a nylock nut (Fig. 9S). Tighten to 135 N/m (100 ft-lb) torque.

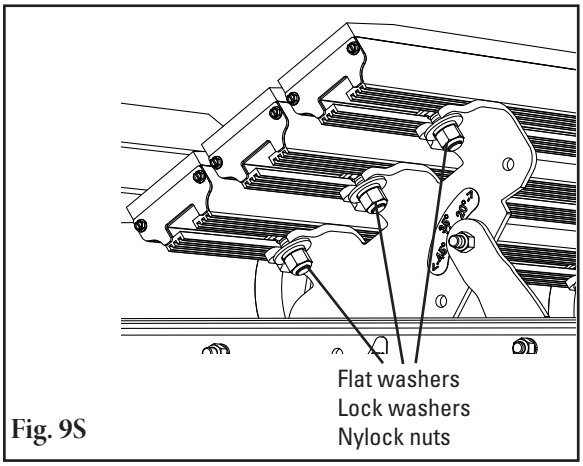

Fig. 9S

Skip to Step 10 - Final Assembly (Page 17)

If installing an impact bed:

4I. Bed preparation - Lower/remove wing plate/center plate. All beds come preset with a 35° trough. If 35° trough is preferred setting, loosen bolts at base of wing plate and wing arms on non-access side and remove wing plates and wing arms completely from the access side. To remove center plate, loosen non-access side bolt and remove the access side bolt (Fig. 4I-a).

If 20° or 45° trough is preferred setting, remove bolts (Fig. 4I-b) and reassemble non-access side wing arm and wing plate to the correct holes for 20° or 45° trough per affixed labels (Fig. 4I-c). Confirm correct setting as shown below (Fig. 4I-d). Prepare crossbeam for installation by removing center plate and access side wing assembly (Fig. 4I-a).

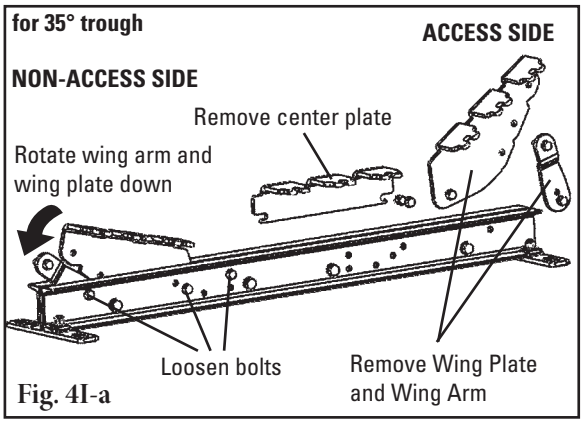

Fig. 4I-a

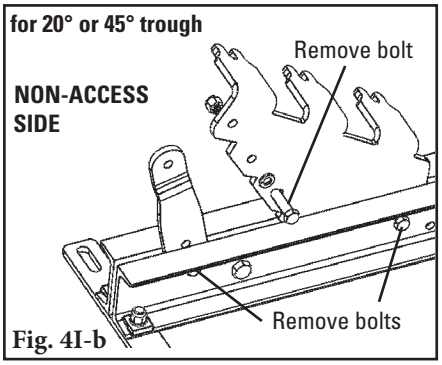

Fig. 4I-b

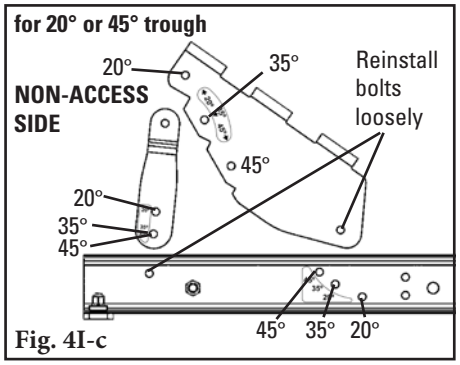

Fig. 4I-c

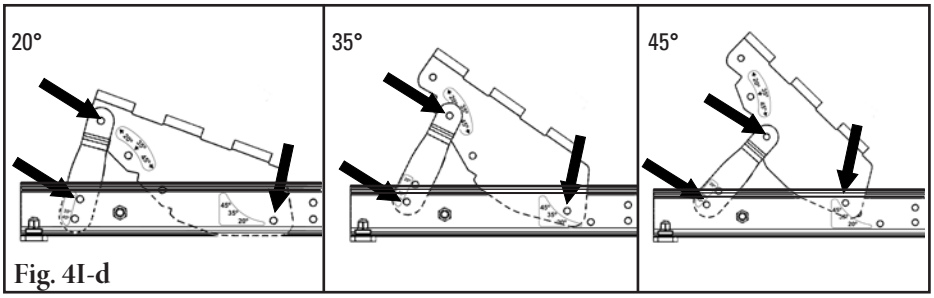

Fig. 4I-d

4.1 Flexco Slider/Impact Beds (cont.)

5I. Install channel crossbeams. Position all channel crossbeams onto the conveyor structure with the tabs on the wing plates facing the tail pulley, aligning with the mounting holes from Step 3. Insert the channel crossbeam mounting bolt and leave finger tight (Fig. 5I). Use shim under mounting plate if needed (Table 1). Verify the height of center roller on leading and trailing idlers (Table 2).

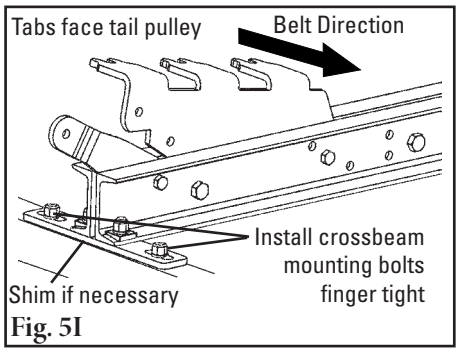

Fig. 5I

Table 1: Shim Requirements

Idler Diameter (CEMA C or D)	600-900mm (24"-36") Belt Width	1050-1800mm (42"-72") Belt Width
125mm (5")	Idler up 13mm (1/2")	No shim
150mm (6")	No shim	Bed up 13mm (1/2")
Idler Diameter (CEMA E)	**900-1500mm (36"-60") Belt Width**	**1800mm (72") Belt Width**
150mm (6")	Bed up 38mm (1.5")	Bed up 50mm (2")
175mm (7")	Bed up 50mm (2")	Bed up 64mm (2.5")

6I. Square up all channel crossbeams. With a square, ensure the first channel crossbeam is perpendicular to the conveyor structure and belt, then tighten in place. Next, space the remaining channel crossbeams with the correct center-to-center spacing. Use tabs on provided template to set spacing (Fig. 6I-a). If this is not possible, use dimensions in Table 3 (Fig. 6I-b). Tighten all bolts in place. **Note:** Center-to-center spacing must be maintained to within +/- 3mm (1/8").

Table 2: Nominal Center Roll Height

Belt Width	600-1200mm (24"- 48")	1350-1500mm (54"- 60")	1800mm (72")
Height	229mm (9")	235mm (9-1/4")	241mm (9-1/2")

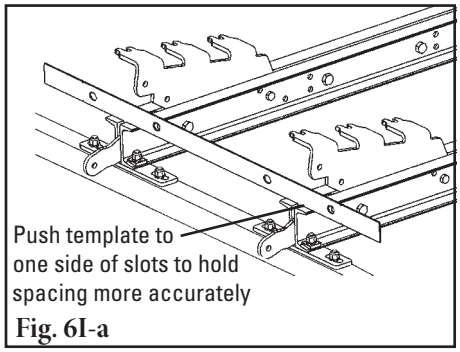

Fig. 6I-a

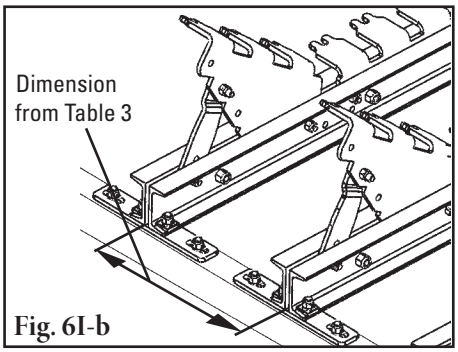

Fig. 6I-b

Table 3: Center-to-center (C-C) Dimensions

Bed Model	1.2M (4')	1.5M (5')
EZIB-L	660mm (26")	864mm (34")
EZIB-M	406mm (16")	559mm (22")

7I. Install center impact bars. Slide the center bracket into the channel crossbeam. Tabs must face the tail pulley. Position studs between tabs in the center bracket while confirming the chamfer of the impact bar is positioned facing the tail pulley. Tighten the nuts to the studs on the bars to 135 N/m (100 ft-lb) torque. Slide this assembly into place under the belt until the notch on the center bracket engages the bolt left in the channel crossbeam (Fig. 7I).
Reinstall second bolt and tighten these two with 81 N/m (60 ft-lb) torque. After center plate is installed, reinstall wing assembly to channel crossbeam per Step 4I for access side.

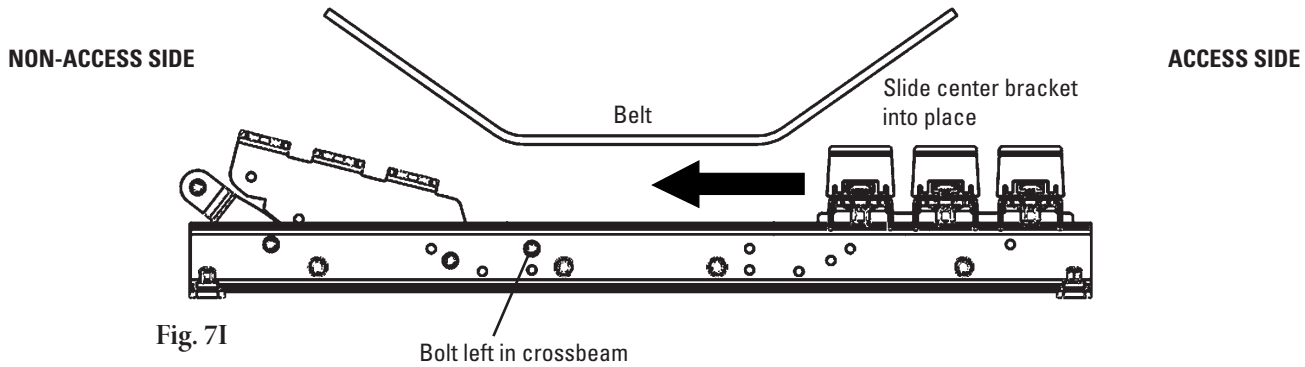

Fig. 7I

4.1 Flexco Slider/Impact Beds (cont.)

8I. Install bars to wing plates. Starting with the innermost bars, set the bars in place. Position the studs between the tabs in the wing assembly while confirming the chamfer of the bar is positioned facing the tail pulley (Fig. 8I). See below for bar assembly configuration.

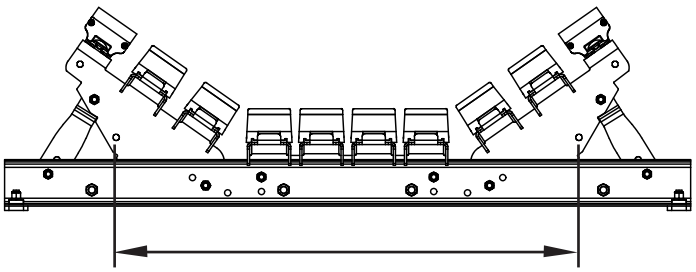

EZIB has bar supports under all white impact bars.

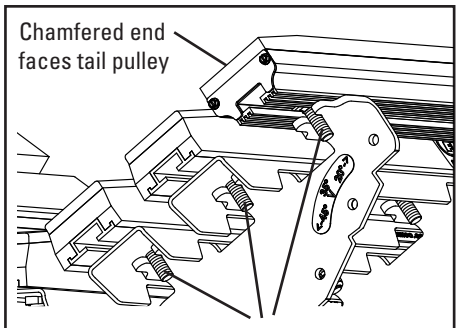

Fig. 8I

9I. Fasten all impact bars. With all impact bars correctly positioned on the wing assemblies, install on each stud a flat washer, lock washer and a nylock nut (Fig. 9I). Tighten to 135 N/m (100 ft-lb) torque.

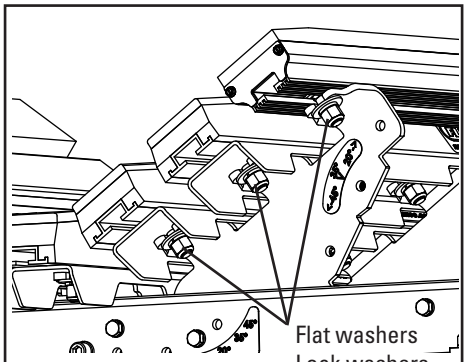

Fig. 9I

4.1 Flexco Slider/Impact Beds (cont.)

Final Assembly

10. **Lift wing assemblies into operating position.** Lift wing assembly up to belt. Rotate wing arm up so that it supports the wing assembly for the correct degree trough angle (Fig. 10a). Insert bolt and ensure all wing plates are set to the preferred trough angle setting (Fig. 10b). Tighten bolts to 81 N/m (60 ft-lb.) torque. Also tighten bolts at base of wing plate and wing arm.
    Note: This is easier when the skirt rubber has been removed.

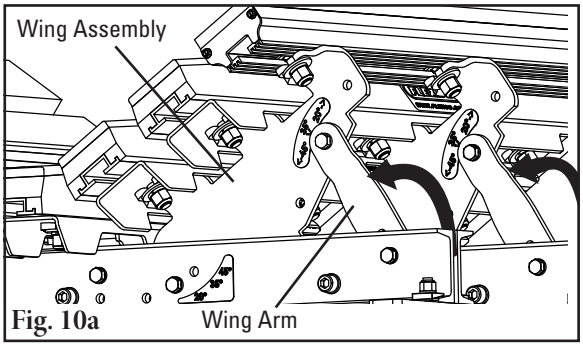

Fig. 10a

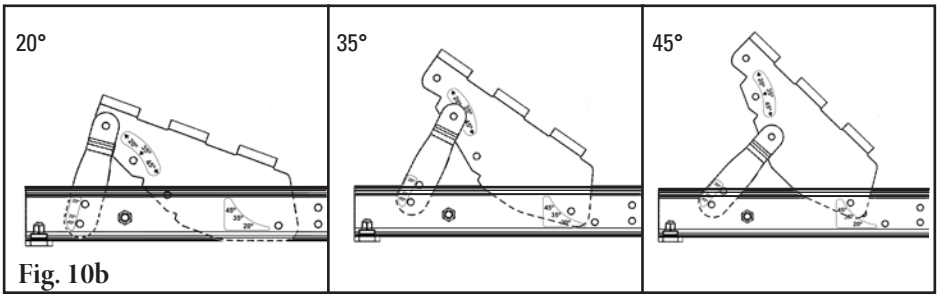

Fig. 10b

11. **Confirm correct clearance between impact bars and belt.** Reference Table 2 to confirm center roll height. On beds with full bars, this should provide a 6mm (1/4") gap to lift the belt (Fig. 11a). On beds with rolls, this should align the idler with the rolls on the bed (Fig. 11b). If this gap or alignment is incorrect, shim idlers or bed accordingly.

Table 2: Nominal Center Roll Height

Belt Width	600-1200mm (24"- 48")	1350-1500mm (54"- 60")	1800mm (72")
Height	229mm (9")	235mm (9-1/4")	241mm (9-1/2")

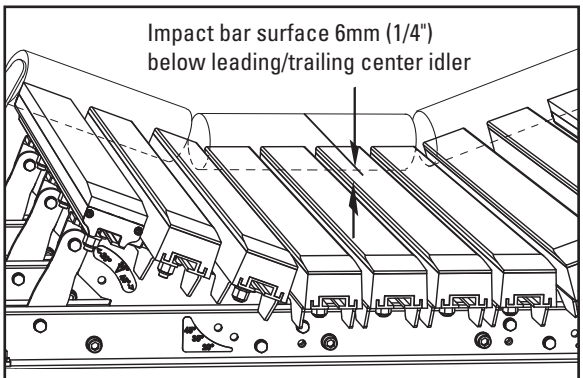

Fig. 11a

12. **Readjust skirt rubber** to maintain a good seal against impact bed. Replace all protective guarding around load zone.

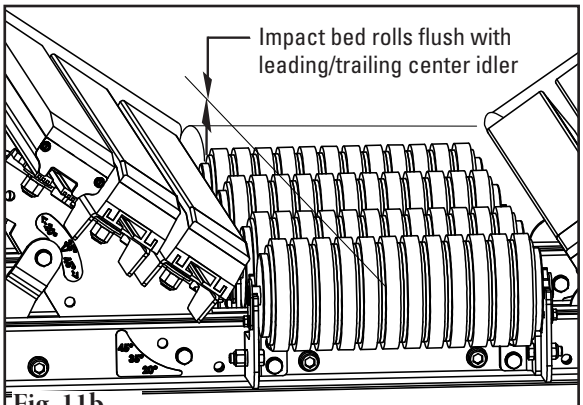

Fig. 11b

Section 5 - Pre-Operation Checklist and Testing

5.1 Pre-Op Checklist

- Recheck that all fasteners are tight
- Check that empty belt is 6mm (1/4") above the impact bars
- Apply all supplied labels
- Be sure that all installation materials and tools have been removed from the belt and conveyor area

5.2 Test Run the Conveyor

- Run the conveyor for at least 15 minutes and confirm the skirt rubber is properly sealing the transfer point. Adjust skirt rubber as needed.

Section 6 - Maintenance

Flexco impact beds are designed to operate with minimum maintenance. However, to maintain superior performance some service is required. When the impact bed is installed a regular maintenance program should be set up. This program will ensure that the impact bed operates at optimal efficiency, and problems can be identified and fixed before any damage is done to the belt, the bed, other conveyor components, or structure.

All safety procedures for inspection of equipment (stationary or operating) must be observed. The Flexco Slider/Impact Bed operates in the loading zone of the conveyor system and is in direct contact with the moving belt. Only visual observations can be made while the belt is running. Service tasks can be done only with the conveyor stopped and by observing the correct lockout/tagout procedures.

6.1 New Installation Inspection

After the impact bed has run for a few days a visual inspection should be made to ensure the bed is performing properly. Make adjustments as needed.

6.2 Routine Visual Inspection (every 2-4 weeks)

A visual inspection of the impact bed can determine:

- If the skirt rubber is adequately keeping the chute area sealed
- If the impact bars are worn out and need to be replaced
- If there are excessive materials building up around the impact bed
- If there is damage to the impact bed, belt or other conveyor components

If any of the above conditions exist, a determination should be made on when the conveyor can be stopped for cleaner maintenance.

6.3 Routine Physical Inspection (every 6-8 weeks)

When the conveyor is not in operation and properly locked and tagged out, a physical inspection of the cleaner to perform the following tasks:

- Clean material buildup off the impact bed and conveyor structure.
- Closely inspect each impact bar for wear and damage. Bars are worn when the UHMW is worn down to or near the rubber. Replace if needed.
- Check the impact bed frame for damage.
- Inspect all fasteners for tightness and wear. Tighten or replace as needed.
- Inspect skirt rubber and adjust as needed to compensate for impact bar wear.
- When maintenance tasks are completed, test run the conveyor to ensure the impact bed is performing properly.

6.4 Bar Replacement Instructions

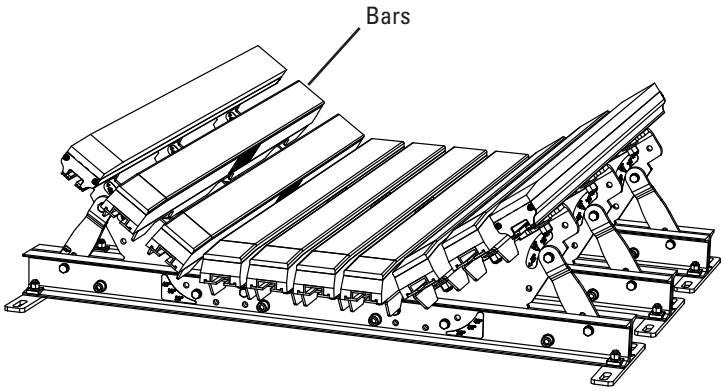

Flexco Impact Bed (EZIB-M shown)

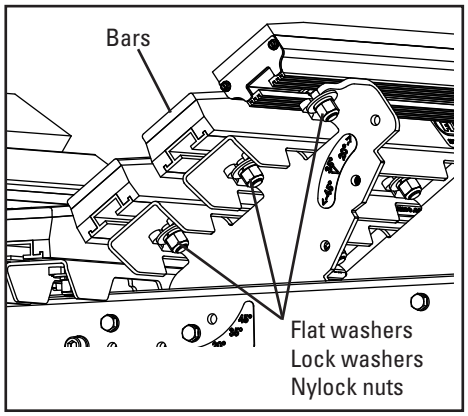

Bar and Fastener Detail

Physically lock out and tag the conveyor at the power source before you begin maintenance.

Tools Needed:
- 319mm (3/4") open-ended wrench
- 19mm (3/4") and 24mm (15/16") deep sockets with socket wrench or impact wrench
- Flex-Lifter™

1. **Remove tension.** Use a Flexco® Belt Lifter or other appropriate lifting equipment to lift the belt off the impact bed.

2. **Loosen wing assemblies.** Loosen or remove bolts from each wing assembly; drop wing arms and wing plates to provide vertical clearance for inspection/removal of bars (Fig. 2).

3. **Drop wing arms.** If belt lifter is used, access to center bars is available. If lifter is not used, remove one side of wing assemblies and remove center plate to slide out and inspect/replace center bars (Fig. 3).

4. **Inspect bars.** Check to see which bars are worn or damaged and need to be replaced.

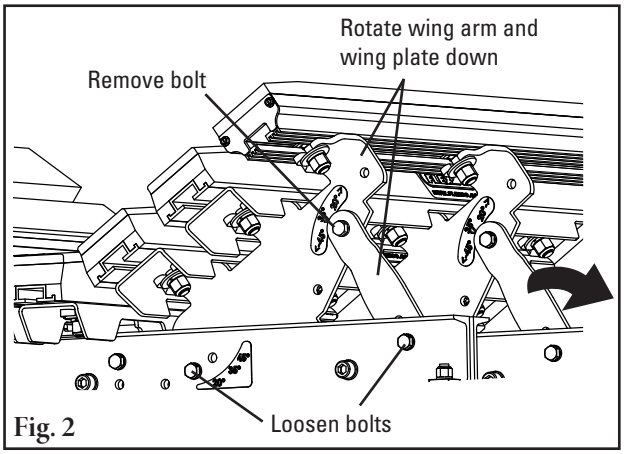

Fig. 2

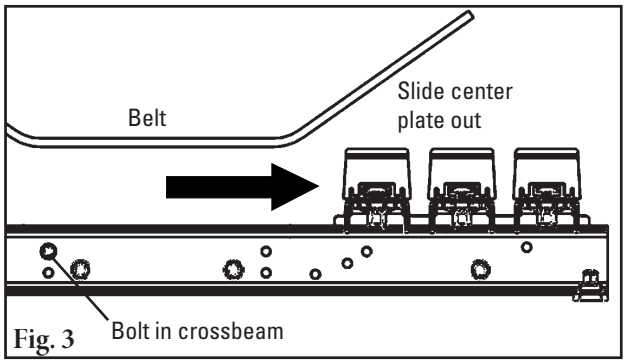

Fig. 3

6.4 Bar Replacement Instructions (cont.)

5. **Remove worn bars.** Loosen and remove nuts at each cross stringer and remove the impact bars (Fig. 5).

6. **Remove support bar (if attached).** Remove the nuts holding the support in place and attach to the new bar (Fig. 6).

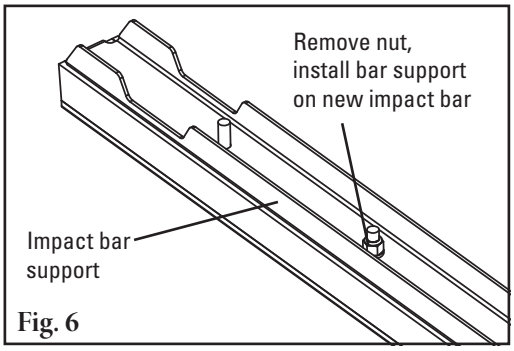

Fig. 6

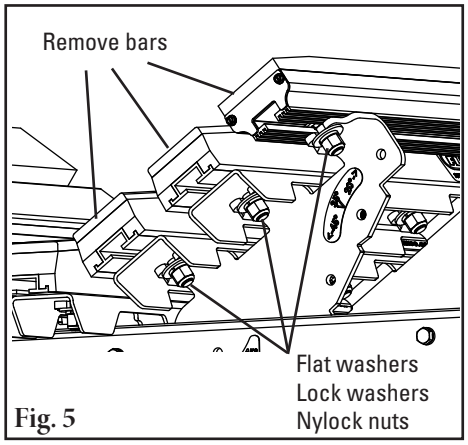

Fig. 5

7. **Install new bars and supports onto center plate.** Place the new bars and bar supports onto the center plate with the chamfered ends facing the tail pulley. Line up the bolts and tighten the bars to the center plate. Tighten to 135 N/m (100 ft-lb) torque. Slide center plate back into place (Fig. 7). Tighten center plate bolts to 60 ft-lb (81 N/m) torque.

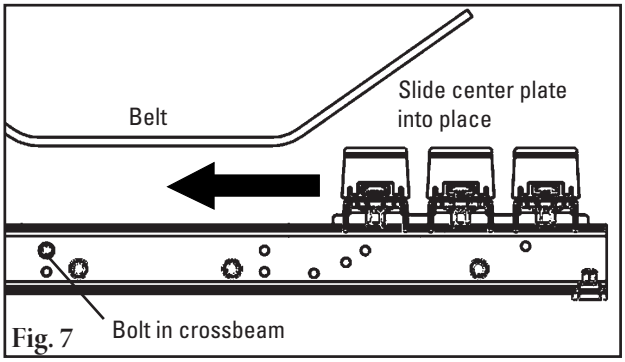

Fig. 7

8. **Install new bars (and supports) onto wing assemblies.** Place the new bars (and bar supports, if present) onto the wing plate with chamfered ends facing the tail pulley (Fig. 8). Line up the bolts and tighten the bars to the wing assemblies. Tighten to 135 N/m (100 ft-lb) torque.

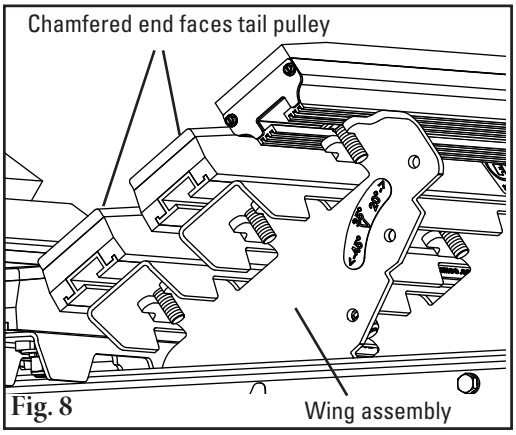

Fig. 8

9. **Reset wing assemblies.** Depending on trough setting (20°, 35° or 45°) use Fig. 9 to reset trough on all wing assemblies. Tighten to 60 ft-lb torque.

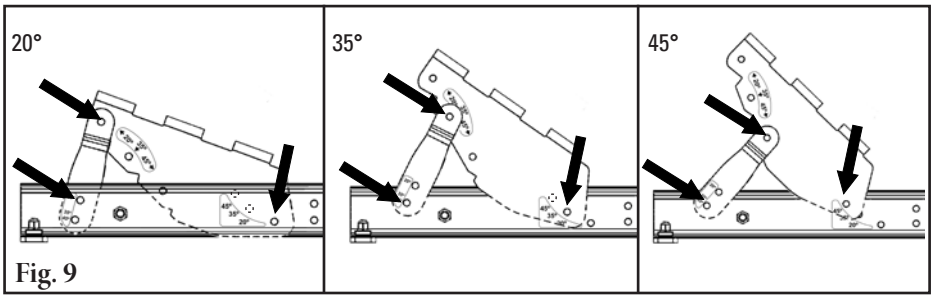

Fig. 9

Test run the conveyor. Run the conveyor for a few minutes and inspect to ensure that the bed is performing properly. Make adjustments as necessary.

6.5 Roller Replacement Instructions

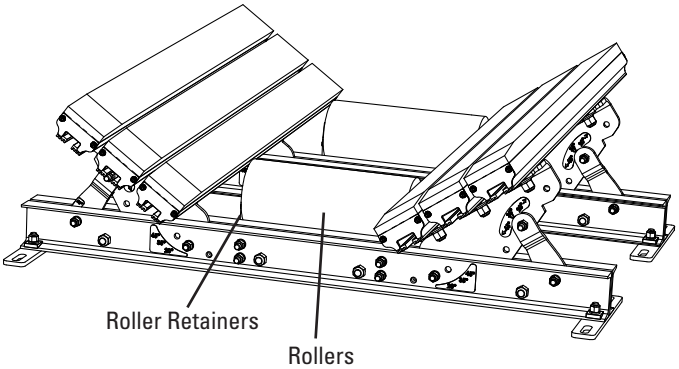

EZ Slider Bed (EZSB-C shown)

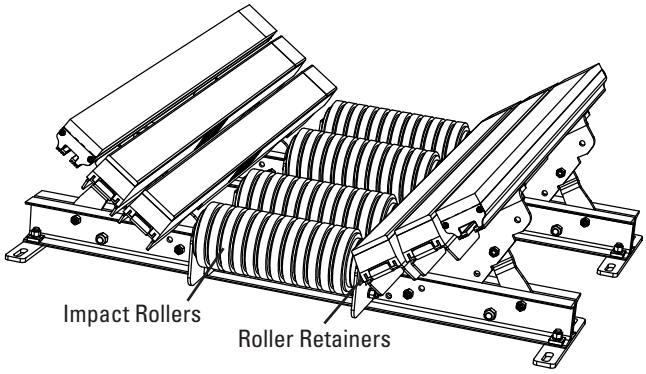

EZ Slider Bed (EZSB-I shown)

Physically lock out and tag the conveyor at the power source before you begin maintenance.

Tools Needed:
- Tape measure
- 13mm (1/2") wrench or crescent wrench
- Flex-Lifter™ (helpful)

CAUTION: Components may be heavy. Use safety-approved lifting procedures.

1. **Remove tension from belt.** Use a Flex-Lifter™ or other appropriate lifting equipment to lift the belt approx. 75mm (3") off the bed.

2. **Remove roller** by unbolting Roller Retainers (Fig. 1).

3. **Install new roller** and re-bolt Roller Retainers (Fig. 1). Confirm roller turns smoothly.

4. **Lower the belt.** Ensure belt completely contacts rollers. Lower brackets if there is not good contact. Tighten all bolts.

5. **Test run the conveyor.** Run the conveyor for a few minutes and inspect to ensure that the bed is performing properly. Make adjustments as necessary.

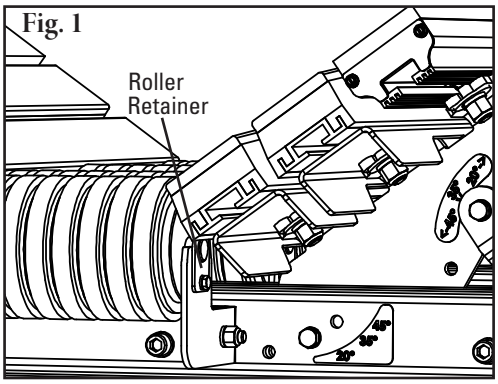

6.6 Maintenance Log

Conveyor Name/No. _____

Date: _____ Work done by: _____ Service Quote #: _____

Activity: _____

Date: _____ Work done by: _____ Service Quote #: _____

Activity: _____

Date: _____ Work done by: _____ Service Quote #: _____

Activity: _____

Date: _____ Work done by: _____ Service Quote #: _____

Activity: _____

Date: _____ Work done by: _____ Service Quote #: _____

Activity: _____

Date: _____ Work done by: _____ Service Quote #: _____

Activity: _____

Date: _____ Work done by: _____ Service Quote #: _____

Activity: _____

Date: _____ Work done by: _____ Service Quote #: _____

Activity: _____

6.7 Slider/Impact Bed Maintenance Checklist

Site: _____ **Inspected by**: _____ **Date:** _____

Impact Bed: _____ **Serial Number:** _____

Beltline Information:

Beltline Number: _____ Belt Condition: _____

Belt Width: ☐ 600mm (24") ☐ 750mm (30") ☐ 900mm (36") ☐ 1050mm (42") ☐ 1200mm (48") ☐ 1350mm (54") ☐ 1500mm (60") ☐ 1800mm (72")

Transition Distance (back of bed to center of tail pulley): _____ Belt Speed: _____ Belt Thickness: _____

Distance to Leading Idler: _____ Distance to Trailing Idler: _____

Vertical Distance between top of nearest idler and top surface of center impact bars: _____

Impact Bar Life:

Date bars installed: _____ Date bars inspected: _____ Estimated bar life:_____

Bar Condition: _____ inches of top cover remaining:_____

Roll Life:

Date rolls installed: _____ Date rolls inspected: _____ Estimated roll life:_____

Roll Condition: _____

Impact Bed Frame Condition:

☐ Good ☐ Bent ☐ Rusted

Overall Impact Bed Performance: (Rate the following 1 - 5, 1= very poor - 5 = very good)

Appearance: ☐ Comments:_____

Location: ☐ Comments:_____

Maintenance: ☐ Comments:_____

Performance: ☐ Comments:_____

Other comments: _____

Section 7 - Troubleshooting

Problem	Possible Cause	Possible Solutions
Bars wearing out too fast	Impact bars are not at 6mm (1/4") below leading and trailing idlers	Adjust/shim as needed to correct dimension
	More than two beds in a row without idler between	Add an idler between at least every other bed to lift the belt back up
	Leading idler does not match troughing angle	Correct the angle of the leading idler to match the bed
Vibration or noise	Belt rubbing too hard on UHMW impact bar covers	Verify height of leading/trailing idlers
	Material buildup under bed	Clean up buildup, adjust skirting
	Skirt rubber pushing too hard on belt	Adjust skirt rubber
Bars deforming	Larger material than specified is flowing through transition (under-specified bed)	Replace with a heavier-duty version of impact bed or add additional bar supports
Bar damage	Mechanical splice damaging UHMW top covers	Repair, skive or replace splice

Section 8 - Specs and CAD Drawings

8.1 Specifications and Guidelines

Easy Solution for Load Zone Problems

- Complete load zone offering with slider beds through impact beds for up to 100 kg-lm of force.
- No specifying trough angle; each bed is adjustable for 20°, 35° and 45° trough settings (ships at 35° setting)
- Low-profile installation. Because Flexco beds feature trough wings that are adjustable, they lay flat during installation, providing more clearance.
- Full UHMW slider bars included on outside bar to provide proper sealing and long life.
- Unique Impact Bar Supports protect the impact bars from damage, extending service life. An Anti-Migratory Tab on each support secures the bar and prevents it from sliding in the direction of belt travel.
- All beds are manufactured for mounting holes belt width +225mm (9"), per CEMA. For wider structure, contact Customer Service for special quote.

How to spec the correct Flexco slider/impact bed for your conveyor transfer point

Roller Size and CEMA Rating

125mm (5") ☐ **150mm (6")** ☐

CEMA **C** ☐ **D** ☐ **E** ☐

Belt Width: _____

Bed Length: 1.2M (4') ☐ **1.5M (5')** ☐

Impact Energy Calculation Chart

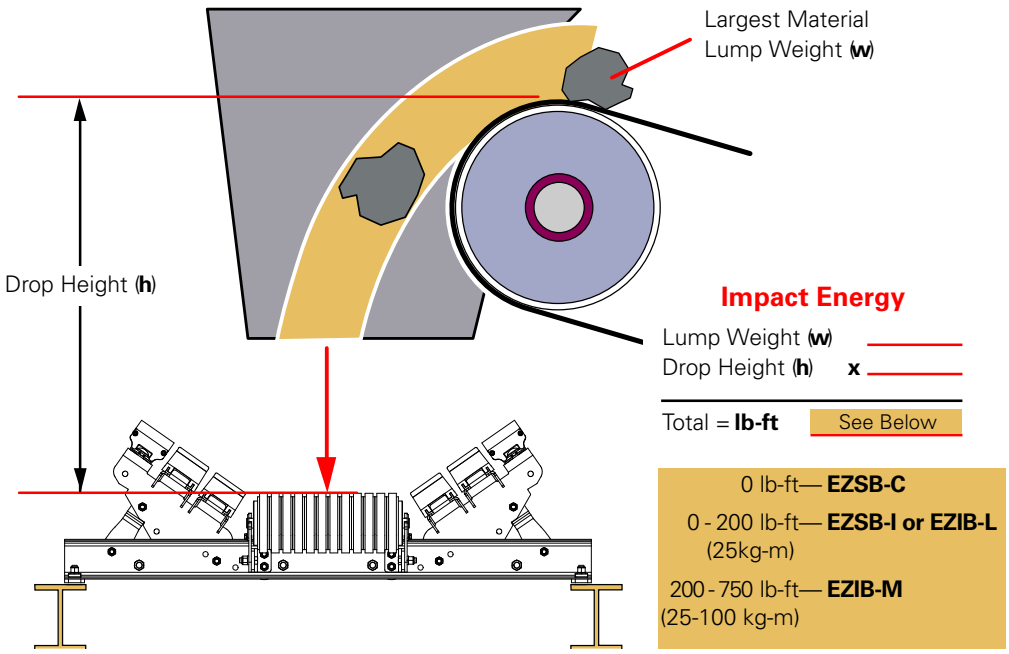

8.2 CAD Drawing - EZSB-C Slider Bed with Rollers

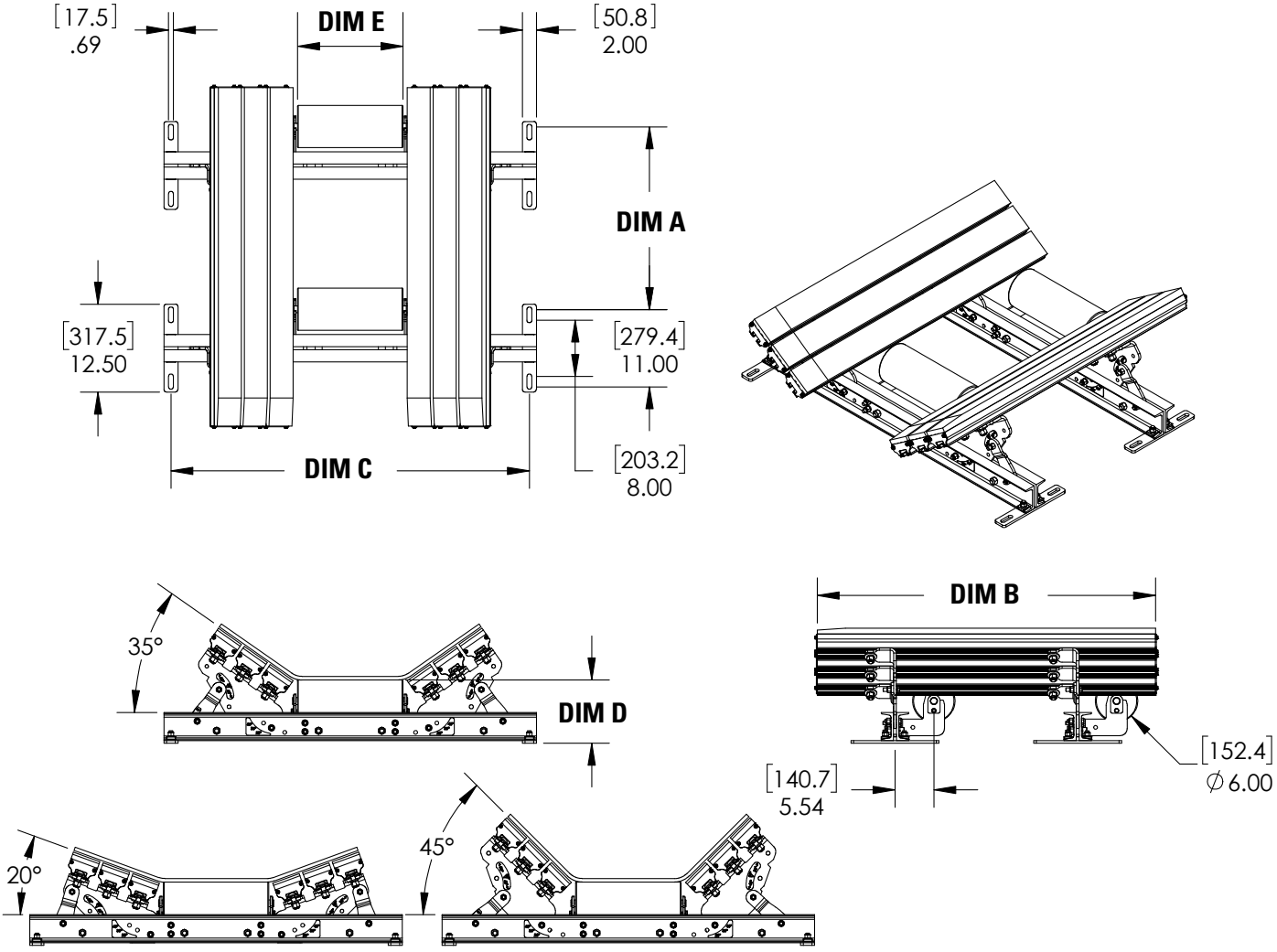

Bed Length 1.2M (4')		Bed Length 1.5M (5')					
Dim A	Dim B	Dim A	Dim B	Bed Width	Dim C	Dim D	Dim E
660.4mm (26")	1240mm (48.82")	863.6mm (34")	1500mm (59.06")	600mm (24")	838 mm (33")	229mm (9")	229mm (9")
				750mm (30")	991mm (39")	229mm (9")	279mm (11")
				900mm (36")	1143mm (45")	229mm (9")	330mm (13")
				1050mm (42")	1295mm (51")	229mm (9")	381mm (15")
				1200mm (48")	1448mm (57")	229mm (9")	432mm (17")
				1350mm (54")	1600mm (63")	235mm (9.25")	483mm (19")
				1500mm (60")	1753mm (69")	235mm (9.25")	533mm (21")
				1800mm (72")	2057mm (81")	241mm (9.5")	635mm (25")

8.2 CAD Drawing - EZSB-I Slider Bed with Impact Rollers

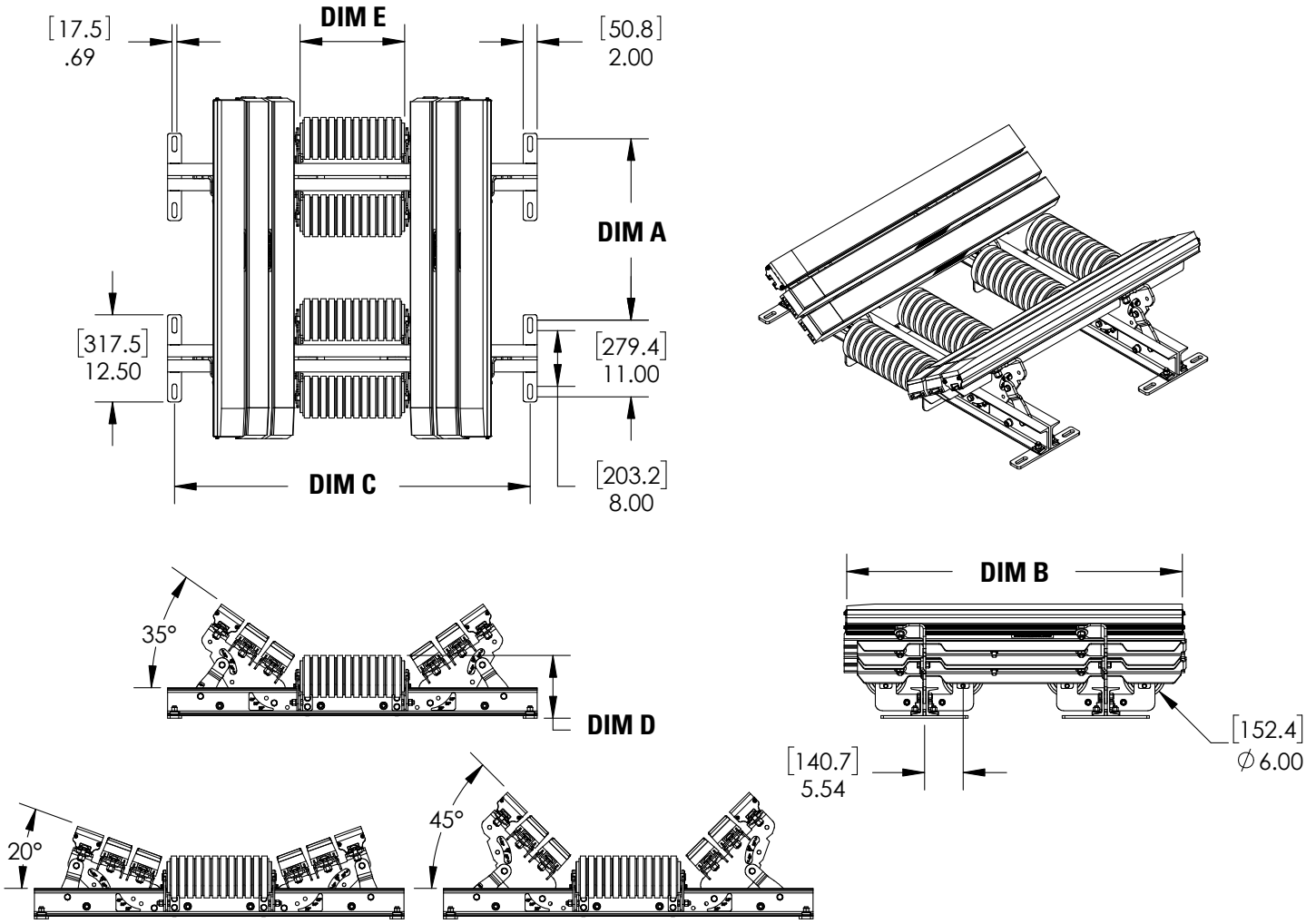

Bed Width	Bed Length 1.2M (4')		Bed Length 1.5M (5')*		Dim C	Dim D	Dim E
	Dim A	Dim B	Dim A	Dim B			
600mm (24")	660.4mm (26")	1223mm (48.14")	863.6mm (34")	1483mm (58.38")	838 mm (33")	229mm (9")	229mm (9")
750mm (30")					991mm (39")	229mm (9")	279mm (11")
900mm (36")					1143mm (45")	229mm (9")	330mm (13")
1050mm (42")					1295mm (51")	229mm (9")	381mm (15")
1200mm (48")					1448mm (57")	229mm (9")	432mm (17")
1350mm (54")					1600mm (63")	235mm (9.25")	483mm (19")
1500mm (60")					1753mm (69")	235mm (9.25")	533mm (21")
1800mm (72")					2057mm (81")	241mm (9.5")	635mm (25")

* 1.5M (5') beds come with 5 impact rolls.

8.2 CAD Drawing - EZIB-L Light-Duty Slider Bed

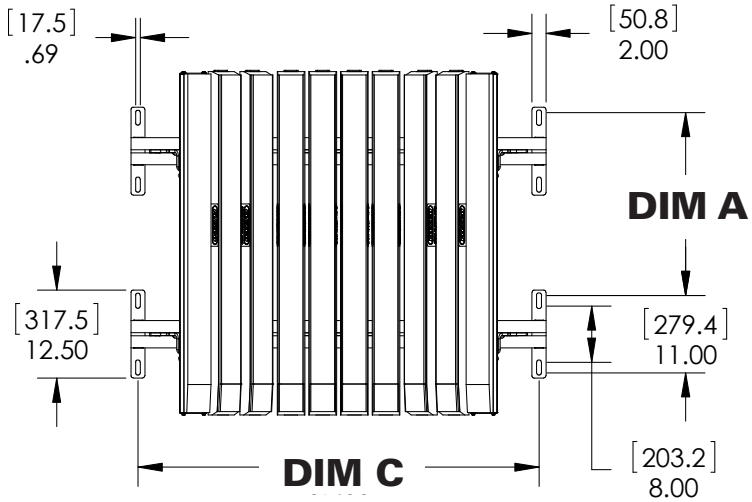

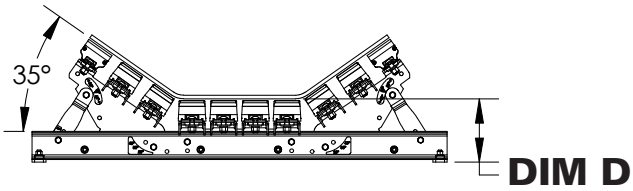

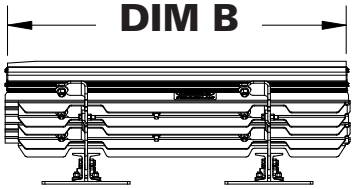

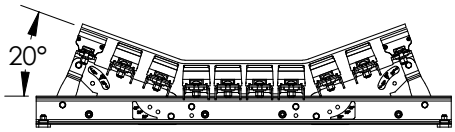

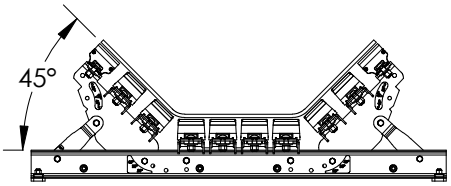

Bed Width	Bed Length 1.2M (4')		Bed Length 1.5M (5')		Dim C	Dim D
	Dim A	Dim B	Dim A	Dim B		
600mm (24")	660.4mm (26")	1223mm (48.14")	863.6mm (34")	1483mm (58.38")	838 mm (33")	229mm (9")
750mm (30")					991mm (39")	229mm (9")
900mm (36")					1143mm (45")	229mm (9")
1050mm (42")					1295mm (51")	229mm (9")
1200mm (48")					1448mm (57")	229mm (9")
1350mm (54")					1600mm (63")	235mm (9.25")
1500mm (60")					1753mm (69")	235mm (9.25")
1800mm (72")					2057mm (81")	241mm (9.5")

8.2 CAD Drawing - EZIB-M Medium-Duty Slider Bed

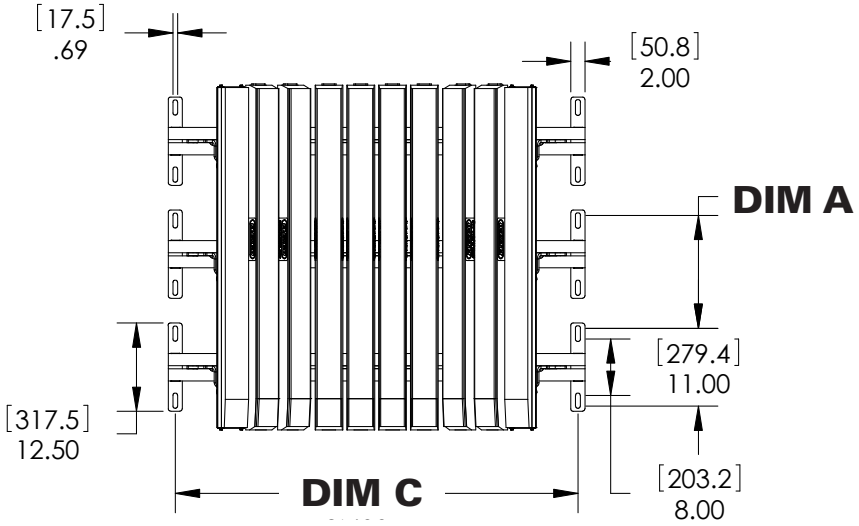

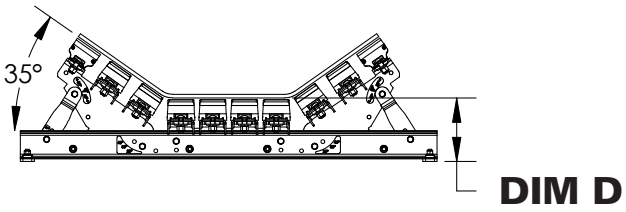

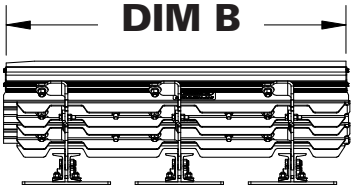

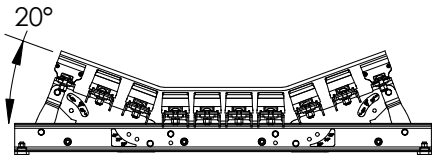

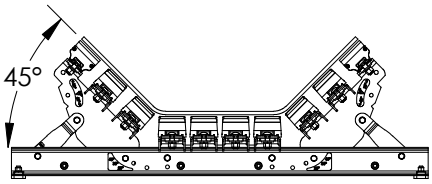

Bed Width	Bed Length 1.2M (4')		Bed Length 1.5M (5')		Dim C	Dim D
	Dim A	Dim B	Dim A	Dim B		
600mm (24")	406.4mm (16")	1223mm (48.14")	558.8mm (22")	1483mm (58.38")	838 mm (33")	229mm (9")
750mm (30")					991mm (39")	229mm (9")
900mm (36")					1143mm (45")	229mm (9")
1050mm (42")					1295mm (51")	229mm (9")
1200mm (48")					1448mm (57")	229mm (9")
1350mm (54")					1600mm (63")	235mm (9.25")
1500mm (60")					1753mm (69")	235mm (9.25")
1800mm (72")					2057mm (81")	241mm (9.5")

Section 9 - Replacement Parts

9.1 Replacement Parts List - Flexco Slider Bed - EZSB-C

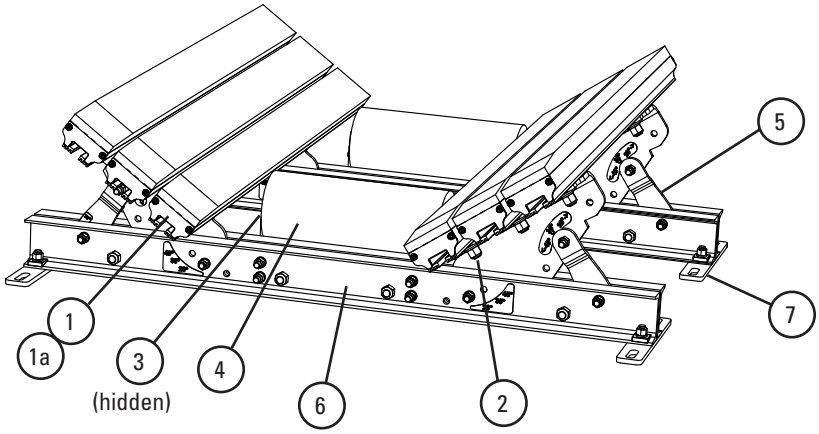

Shim Requirements

IMPACT BED SIZE	CEMA C OR D, 125mm (5") Idlers	CEMA C OR D, 150mm (6") Idlers
600-900mm (24"-36")	Shim idler up 13mm (.5")	No Kits Required
1050-1800mm (42"-72")	No Kits Required	Use (1) SHIM-KITL; Shim up 13mm (.5")

IMPACT BED SIZE	CEMA E, 150mm (6") Idlers	CEMA E, 175mm (7") Idlers
900-1500mm (36"-60")	Use (3) SHIM-KITL; Shim up 38mm (1.5")	Use (4) SHIM-KITL; Shim up 50mm (2")
1800mm (72")	Use (4) SHIM-KITL; Shim up 50mm (2")	Use (5) SHIM-KITL; Shim up 63mm (2.5")

Replacement Parts

REF	DESCRIPTION	ORDERING NUMBER	ITEM CODE	WT. KG.
1	Slider Bar, 1.2M (4')	SB4	78789	9.1
1a	Slider Bar, 1.5M (5')	SB5	78790	10.9
2	Bar Bolt Kit (incl. 1 ea. 15mm (5/8") carriage bolt, square washer, flat washer, lock washer, Nylock nut)	IBBK	76928	0.2
3	Slider Roll Mount Kit *	EZRMK	78952	2.3
4	Roll 600mm (24")	RRTD6-24	79874	4.1
	Roll 750mm (30")	RRTD6-30	79875	4.8
	Roll 900mm (36")	RRTD6-36	79876	5.6
	Roll 1050mm (42")	RRTD6-42	79877	6.3
	Roll 1200mm (48")	RRTD6-48	79878	7.3
	Roll 1350mm (54")	RRTD6-54	79879	7.7
	Roll 1500mm (60")	RRTD6-60	79880	8.2
	Roll 1800mm (72")	RRTD6-72	79881	9.8
5	Wing Plate Kit 600mm (24")*	EZWPK-24	78970	7.7
	Wing Plate Kit 750mm (30")*	EZWPK-30	78971	7.9
	Wing Plate Kit 900mm (36")*	EZWPK-36	78972	9.6
	Wing Plate Kit 1050mm (42")*	EZWPK-42	78973	11.9
	Wing Plate Kit 1200mm (48")*	EZWPK-48	78974	13.7
	Wing Plate Kit 1350mm (54")*	EZWPK-54	78975	16.1
	Wing Plate Kit 1500mm (60")*	EZWPK-60	78976	17.7
	Wing Plate Kit 1800mm (72")*	EZWPK-72	78977	21.2
6	Cross Stringer Kit 600mm (24")*	EZCSK-24	78978	22.3
	Cross Stringer Kit 750mm (30")*	EZCSK-30	78979	25.6
	Cross Stringer Kit 900mm (36")*	EZCSK-36	78980	28.9
	Cross Stringer Kit 1050mm (42")*	EZCSK-42	78981	32.1
	Cross Stringer Kit 1200mm (48")*	EZCSK-48	78982	35.6
	Cross Stringer Kit 1350mm (54")*	EZCSK-54	78983	38.9
	Cross Stringer Kit 1500mm (60")*	EZCSK-60	78984	42.2
	Cross Stringer Kit 1800mm (72")*	EZCSK-72	78985	45.0
7	Shim Kit Light Duty (incl. 4 shims)	SHIM-KITL	77548	6.2

*Hardware Included

Replacement Quantities for EZSB-C

mm	600	750	900	1050	1200	1350	1500	1800
in.	24	30	36	42	48	54	60	72
ROLLS REQUIRED	2	2	2	2	2	2	2	2
SLIDER BARS REQUIRED	4	4	4	6	6	8	8	8
BAR BOLT KITS REQUIRED	8	8	8	12	12	16	16	16

9.2 Replacement Parts List - Flexco Slider Bed - EZSB-I

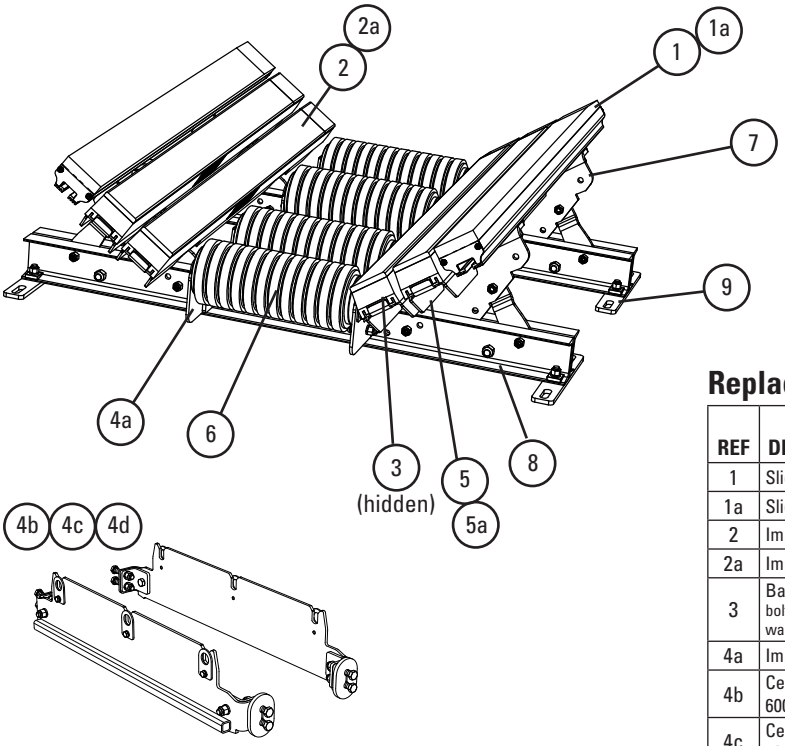

Shim Requirements

IMPACT BED SIZE	CEMA C OR D, 125mm (5") Idlers	CEMA C OR D, 150mm (6") Idlers
600-900mm (24"-36")	Shim idler up 13mm (.5")	No Kits Required
1050-1800mm (42"-72")	No Kits Required	Use (1) SHIM-KITL; Shim up 13mm (.5")

IMPACT BED SIZE	CEMA E, 150mm (6") Idlers	CEMA E, 175mm (7") Idlers
900-1500mm (36"-60")	Use (3) SHIM-KITL; Shim up 38mm (1.5")	Use (4) SHIM-KITL; Shim up 50mm (2")
1800mm (72")	Use (4) SHIM-KITL; Shim up 50mm (2")	Use (5) SHIM-KITL; Shim up 63mm (2.5")

Replacement Quantities for EZSB-I

mm		600	750	900	1050	1200	1350	1500	1800
in.		24	30	36	42	48	54	60	72
ROLLS REQUIRED		4' beds have 4 rolls; 5' beds have 5 rolls							
BARS REQUIRED	SLIDER	2	2	2	2	2	2	2	2
	IMPACT	2	2	2	4	4	6	6	6
BAR BOLT KITS REQUIRED		10	10	10	16	16	22	22	22
BAR SUPPORTS REQUIRED		2	2	2	4	4	6	6	6

Replacement Parts

REF	DESCRIPTION	ORDERING NUMBER	ITEM CODE	WT. KG.
1	Slider Bar, 1.2M (4')	SB4	78789	9.1
1a	Slider Bar, 1.5M (5')	SB5	78790	10.9
2	Impact Bar, 1.2M (4')	IB4	76926	7.7
2a	Impact Bar, 1.5M (5')	IB5	76927	9.5
3	Bar Bolt Kit (incl. 1 ea. 15mm (5/8")carriage bolt, square washer, flat washer, lock washer, Nylock nut)	IBBK	76928	0.2
4a	Impact Roller Mount Kit *	EZIRMK	79318	2.3
4b	Center Roller Mount Kit for 1.5M (5') x 600-1200mm (24-48")**	EZCRMK24-48	90434	19.7
4c	Center Roller Mount Kit for 1.5M (5') x 1350-1500mm (54-60")**	EZCRMK54-60	90261	19.7
4d	Center Roller Mount Kit for 1.5M (5') x 1800mm (72")**	EZCRMK72	90262	19.8
5	Impact Bar Support - L 1.2M (4')*	EZBS-L4	78953	7.3
5a	Impact Bar Support - L 1.5M (5')*	EZBS-L5	78954	9.3
6	Impact Roll 600mm (24")	RRTID6-24	79883	4.6
	Impact Roll 750mm (30")	RRTID6-30	79884	5.4
	Impact Roll 900mm (36")	RRTID6-36	79885	6.3
	Impact Roll 1050mm (42")	RRTID6-42	79886	7.3
	Impact Roll 1200mm (48")	RRTID6-48	79887	8.1
	Impact Roll 1350mm (54")	RRTID6-54	79888	9.0
	Impact Roll 1500mm (60")	RRTID6-60	79889	9.8
	Impact Roll 1800mm (72")	RRTID6-72	79890	11.6
7	Wing Plate Kit 600mm (24")*	EZWPK-24	78970	7.7
	Wing Plate Kit 750mm (30")*	EZWPK-30	78971	7.9
	Wing Plate Kit 900mm (36")*	EZWPK-36	78972	9.6
	Wing Plate Kit 1050mm (42")*	EZWPK-42	78973	11.9
	Wing Plate Kit 1200mm (48")*	EZWPK-48	78974	13.7
	Wing Plate Kit 1350mm (54")*	EZWPK-54	78975	16.1
	Wing Plate Kit 1500mm (60")*	EZWPK-60	78976	17.7
	Wing Plate Kit 1800mm (72")*	EZWPK-72	78977	21.2
8	Cross Stringer Kit 600mm (24")*	EZCSK-24	78978	22.3
	Cross Stringer Kit 750mm (30")*	EZCSK-30	78979	25.6
	Cross Stringer Kit 900mm (36")*	EZCSK-36	78980	28.9
	Cross Stringer Kit 1050mm (42")*	EZCSK-42	78981	32.1
	Cross Stringer Kit 1200mm (48")*	EZCSK-48	78982	35.6
	Cross Stringer Kit 1350mm (54")*	EZCSK-54	78983	38.9
	Cross Stringer Kit 1500mm (60")*	EZCSK-60	78984	42.2
	Cross Stringer Kit 1800mm (72")*	EZCSK-72	78985	45.0
9	Shim Kit Light Duty (incl. 4 shims)	SHIM-KITL	77548	6.2

*Hardware Included
** 1.5M (5') beds come with 5 impact rolls.

9.3 Replacement Parts List - Flexco Impact Bed, Light Duty - EZIB-L

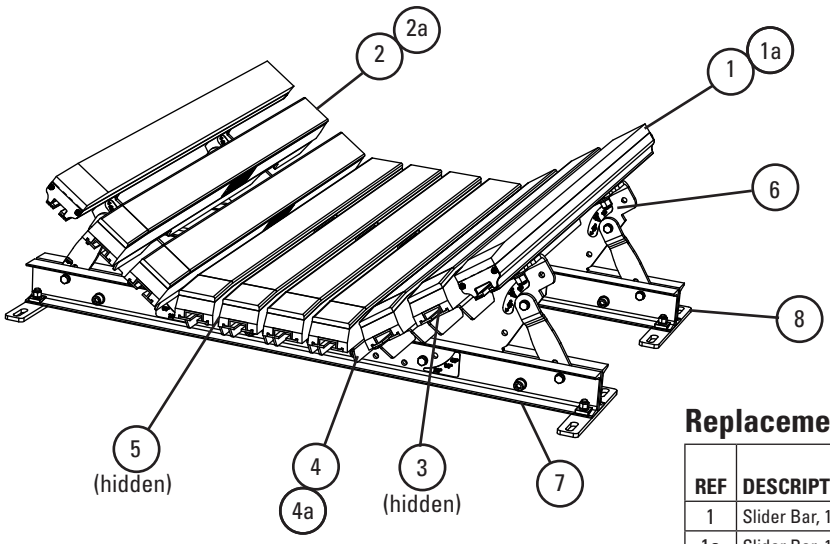

Replacement Parts

REF	DESCRIPTION	ORDERING NUMBER	ITEM CODE	WT. KG
1	Slider Bar, 1.2M (4')	SB4	78789	9.1
1a	Slider Bar, 1.5M (5')	SB5	78790	10.9
2	Impact Bar, 1.2M (4')	IB4	76926	7.7
2a	Impact Bar, 1.5M (5')	IB5	76927	9.5
3	Bar Bolt Kit (incl. 1 ea. 15mm (5/8")carriage bolt, square washer, flat washer, lock washer, Nylock nut)	IBBK	76928	0.2
4	Impact Bar Support - L 1.2M (4')*	EZBS-L4	78953	7.3
4a	Impact Bar Support - L 1.5M (5')*	EZBS-L5	78954	9.3
5	Center Bar Mount Kit 600mm (24")*	EZBMK-24	78944	2.4
	Center Bar Mount Kit 750mm (30")*	EZBMK-30	78945	2.6
	Center Bar Mount Kit 900mm (36")*	EZBMK-36	78946	3.4
	Center Bar Mount Kit 1050mm (42")*	EZBMK-42	78947	3.6
	Center Bar Mount Kit 1200mm (48")*	EZBMK-48	78948	4.4
	Center Bar Mount Kit 1350mm (54")*	EZBMK-54	78949	4.8
	Center Bar Mount Kit 1500mm (60")*	EZBMK-60	78950	5.6
	Center Bar Mount Kit 1800mm (72")*	EZBMK-72	78951	6.6
6	Wing Plate Kit 600mm (24")*	EZWPK-24	78970	7.7
	Wing Plate Kit 750mm (30")*	EZWPK-30	78971	7.9
	Wing Plate Kit 900mm (36")*	EZWPK-36	78972	9.6
	Wing Plate Kit 1050mm (42")*	EZWPK-42	78973	11.9
	Wing Plate Kit 1200mm (48")*	EZWPK-48	78974	13.7
	Wing Plate Kit 1350mm (54")*	EZWPK-54	78975	16.1
	Wing Plate Kit 1500mm (60")*	EZWPK-60	78976	17.7
	Wing Plate Kit 1800mm (72")*	EZWPK-72	78977	21.2
7	Cross Stringer Kit 600mm (24")*	EZCSK-24	78978	22.3
	Cross Stringer Kit 750mm (30")*	EZCSK-30	78979	25.6
	Cross Stringer Kit 900mm (36")*	EZCSK-36	78980	28.9
	Cross Stringer Kit 1050mm (42")*	EZCSK-42	78981	32.1
	Cross Stringer Kit 1200mm (48")*	EZCSK-48	78982	35.6
	Cross Stringer Kit 1350mm (54")*	EZCSK-54	78983	38.9
	Cross Stringer Kit 1500mm (60")*	EZCSK-60	78984	42.2
	Cross Stringer Kit 1800mm (72")*	EZCSK-72	78985	45.0
8	Shim Kit Light Duty (incl. 4 shims)	SHIM-KITL	77548	6.2

*Hardware Included

Shim Requirements

IMPACT BED SIZE	CEMA C OR D, 125mm (5") Idlers	CEMA C OR D, 150mm (6") Idlers
600-900mm (24"-36")	Shim idler up 13mm (.5")	No Kits Required
1050-1800mm (42"-72")	No Kits Required	Use (1) SHIM-KITL; Shim up 13mm (.5")

IMPACT BED SIZE	CEMA E, 150mm (6") Idlers	CEMA E, 175mm (7") Idlers
900-1500mm (36"-60")	Use (3) SHIM-KITL; Shim up 38mm (1.5")	Use (4) SHIM-KITL; Shim up 50mm (2")
1800mm (72")	Use (4) SHIM-KITL; Shim up 50mm (2")	Use (5) SHIM-KITL; Shim up 63mm (2.5")

Replacement Quantities for EZIB-L

mm		600	750	900	1050	1200	1350	1500	1800
in.		24	30	36	42	48	54	60	72
BARS REQUIRED	SLIDER	2	2	2	2	2	2	2	2
	IMPACT	4	4	5	7	8	10	11	12
BAR BOLT KITS REQUIRED		16	16	19	25	28	34	37	40
BAR SUPPORTS REQUIRED		4	4	5	7	8	10	11	12

9.4 Replacement Parts List - Flexco Impact Bed, Medium Duty - EZIB-M

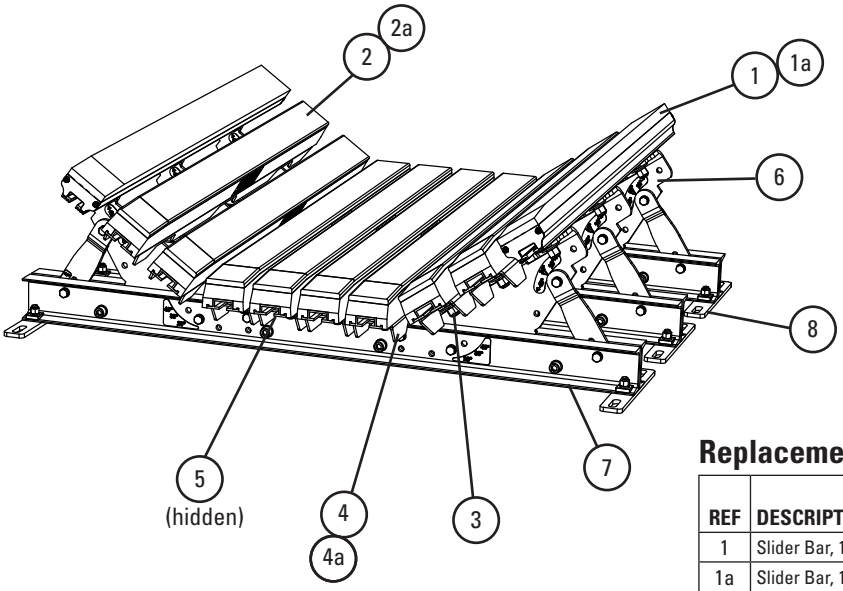

Replacement Parts

REF	DESCRIPTION	ORDERING NUMBER	ITEM CODE	WT. KG.
1	Slider Bar, 1.2M (4')	SB4	78789	9.1
1a	Slider Bar, 1.5M (5')	SB5	78790	10.9
2	Impact Bar, 1.2M (4')	IB4	76926	7.7
2a	Impact Bar, 1.5M (5')	IB5	76927	9.5
3	Bar Bolt Kit (incl. 1 ea. 15mm (5/8")carriage bolt, square washer, flat washer, lock washer, Nylock nut)	IBBK	76928	0.2
4	Impact Bar Support - M 1.2M (4')*	IBS-M4	76931	7.7
4a	Impact Bar Support - M 1.5M (5')*	IBS-M5	76932	9.6
5	Center Bar Mount Kit 600mm (24")*	EZBMK-24	78944	2.4
	Center Bar Mount Kit 750mm (30")*	EZBMK-30	78945	2.6
	Center Bar Mount Kit 900mm (36")*	EZBMK-36	78946	3.4
	Center Bar Mount Kit 1050mm (42")*	EZBMK-42	78947	3.6
	Center Bar Mount Kit 1200mm (48")*	EZBMK-48	78948	4.4
	Center Bar Mount Kit 1350mm (54")*	EZBMK-54	78949	4.8
	Center Bar Mount Kit 1500mm (60")*	EZBMK-60	78950	5.6
	Center Bar Mount Kit 1800mm (72")*	EZBMK-72	78951	6.6
6	Wing Plate Kit 600mm (24")*	EZWPK-24	78970	7.7
	Wing Plate Kit 750mm (30")*	EZWPK-30	78971	7.9
	Wing Plate Kit 900mm (36")*	EZWPK-36	78972	9.6
	Wing Plate Kit 1050mm (42")*	EZWPK-42	78973	11.9
	Wing Plate Kit 1200mm (48")*	EZWPK-48	78974	13.7
	Wing Plate Kit 1350mm (54")*	EZWPK-54	78975	16.1
	Wing Plate Kit 1500mm (60")*	EZWPK-60	78976	17.7
	Wing Plate Kit 1800mm (72")*	EZWPK-72	78977	21.2
7	Cross Stringer Kit 600mm (24")*	EZCSK-24	78978	22.3
	Cross Stringer Kit 750mm (30")*	EZCSK-30	78979	25.6
	Cross Stringer Kit 900mm (36")*	EZCSK-36	78980	28.9
	Cross Stringer Kit 1050mm (42")*	EZCSK-42	78981	32.1
	Cross Stringer Kit 1200mm (48")*	EZCSK-48	78982	35.6
	Cross Stringer Kit 1350mm (54")*	EZCSK-54	78983	38.9
	Cross Stringer Kit 1500mm (60")*	EZCSK-60	78984	42.2
	Cross Stringer Kit 1800mm (72")*	EZCSK-72	78985	45.0
8	Shim Kit Medium Duty (incl. 4 shims)	SHIM-KITM	77549	9.3

*Hardware Included

Shim Requirements

IMPACT BED SIZE	CEMA C OR D, 125mm (5") Idlers	CEMA C OR D, 150mm (6") Idlers
600-900mm (24"-36")	Shim idler up 13mm (.5")	No Kits Required
1050-1800mm (42"-72")	No Kits Required	Use (1) SHIM-KITL; Shim up 13mm (.5")

IMPACT BED SIZE	CEMA E, 150mm (6") Idlers	CEMA E, 175mm (7") Idlers
900-1500mm (36"-60")	Use (3) SHIM-KITL; Shim up 38mm (1.5")	Use (4) SHIM-KITL; Shim up 50mm (2")
1800mm (72")	Use (4) SHIM-KITL; Shim up 50mm (2")	Use (5) SHIM-KITL; Shim up 63mm (2.5")

Replacement Quantities for EZIB-M

mm		600	750	900	1050	1200	1350	1500	1800
in.		24	30	36	42	48	54	60	72
BARS REQUIRED	SLIDER	2	2	2	2	2	2	2	2
	IMPACT	4	4	5	7	8	10	11	12
BAR BOLT KITS REQUIRED		26	26	31	41	46	56	61	66
BAR SUPPORTS REQUIRED		4	4	5	7	8	10	11	12

9.5 Optional Replacement Parts

Impact Bars with 25mm (1") UHMW

For impact beds that have heavy abrasive wear on the impact bars.

DESCRIPTION	ORDERING NUMBER	ITEM CODE	WT. KG.
1.2M (4') Impact Bar with 25mm (1") UHMW	IB4-1U	76965	7.7
1.5M (5') Impact Bar with 25mm (1") UHMW	IB5-1U	76966	9.6

Lead time: 1 working day

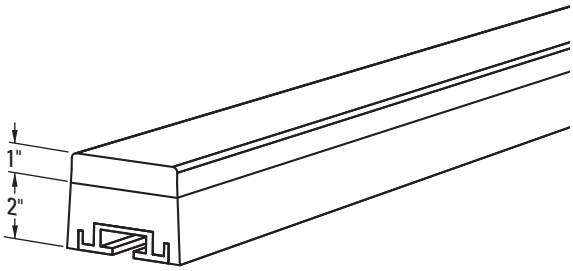

Impact Bar with 1" UHMW Cover

Impact Bar Bolt Kit for Other OEM Impact Beds*

13mm (1/2") carriage bolt, square washer, flat washer and Nylock nut to mount DRX Impact Bars on other OEM beds that use 13mm (1/2") T-bolts. Count cross stringers on OEM bed (example: 3 cross stringers require 3 Bolt Kits per impact bar)

DESCRIPTION	ORDERING NUMBER	ITEM CODE	WT. KG.
OEM Impact Bar Bolt Kit	OIBBK	76950	0.2

*Kit includes 1 ea. bolt, square washer, flat washer and Nylock nut.
Lead time: 1 working day

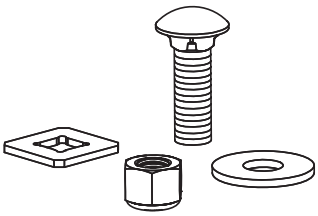

Optional Impact Bar Bolt Kit

Section 10 – Other Flexco Conveyor Products

Flexco provides many conveyor products that help your conveyors to run more efficiently and safely. These components solve typical conveyor problems and improve productivity. Here is a quick overview on just a few of them:

EZP1 Precleaner

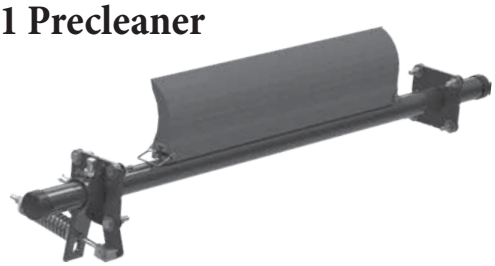

- Patented ConShear™ blade renews its cleaning edge as it wears
- Visual Tension Check™ for optimal blade tensioning and simple retensioning
- Quick and easy one-pin blade replacement Material Path Option™ for optimal cleaning and reduced maintenance

Flex-Lok™ Skirt Clamps

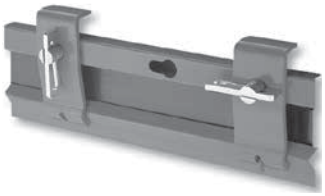

- Eliminates transfer zone spillage
- Interlocking design for easy installation and one person maintenance
- Unique wedge pin holds rubber securely in place and is easy to adjust
- Available in various models and in stainless steel

EZS2 Secondary Cleaner

- Long-wearing tungsten carbide blades for superior cleaning efficiency
- Patented FormFlex™ cushions independently tension each blade to the belt for consistent, constant cleaning power
- Easy to install, simple to service
- Works with Flexco mechanical belt splices

PT Max™ Belt Trainer

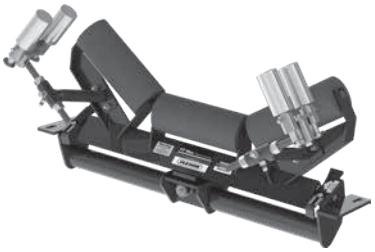

- Patented "pivot & tilt" design for superior training action
- Dual sensor rollers on each side to minimize belt damage
- Pivot point guaranteed not to seize or freeze up
- Available for topside and return side belts

Flexco Specialty Belt Cleaners

- "Limited space" cleaners for tight conveyor applications
- High Temp cleaners for severe, high heat applications
- A rubber fingered cleaner for chevron and raised rib belts
- Multiple cleaner styles in stainless steel for corrosive applications

Belt Plows

- A belt cleaner for the tail pulley
- Exclusive blade design quickly spirals debris off the belt
- Economical and easy to service
- Available in vee or diagonal models

Flexco Europe GmbH • Maybachstrasse 9 • 72348 Rosenfeld • Germany
Tel: +49-7428-9406-0 • Fax: +49-7428-9406-260 • E-mail: europe@flexco.com

Visit **www.flexco.com** for other Flexco locations and products.

©2021 Flexible Steel Lacing Company. 01/28/21. For reorder: X5063