Segmented Transfer Plate (STP)

Installation, Operation & Maintenance Manual

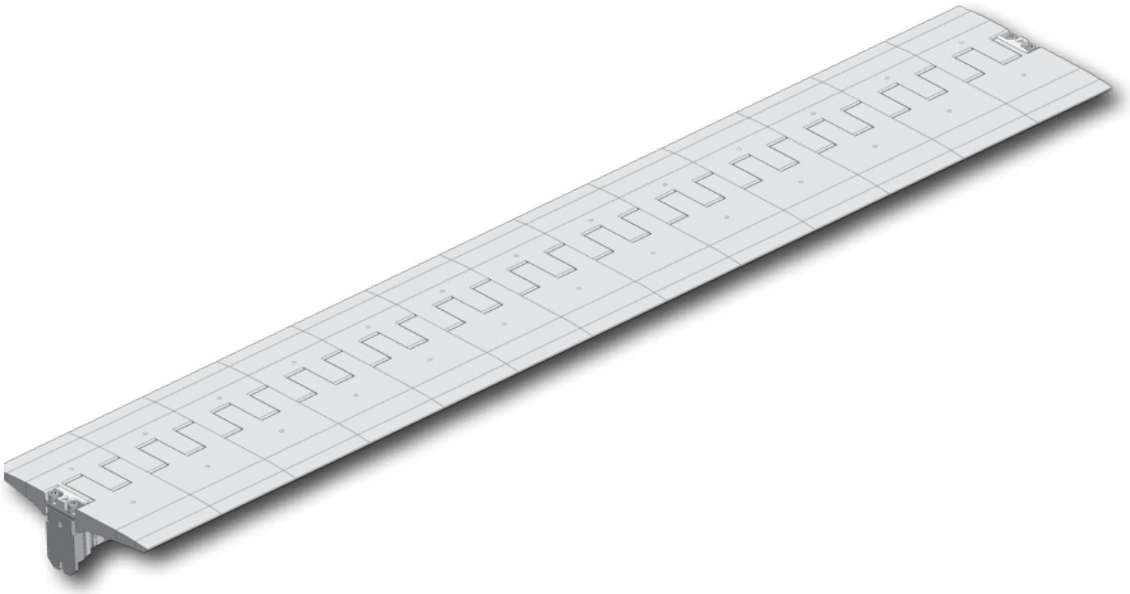

FLEXCO

STP – Segmented Transfer Plate

Ordering Number:	
Installation Date:	
Purchase Date:	
Purchased From:	

This information will be helpful for any future inquiries or questions about STP replacement parts, specifications, or troubleshooting.

Table of Contents

Section 1 - Important Information 4
1.1 Introduction 4
1.2 User Benefits 4
1.3 Service Option 4

Section 2 - Safety Considerations and Precautions 5
2.1 Stationary Conveyors 5
2.2 Operating Conveyors 5

Section 3 - Pre-Installation Checks and Options 6
3.1 Checklist 6
3.2 Segmented Transfer Plate Component Identification 7
3.3 Tools Required for Installation 8
3.4 Conveyor Mounting Structure 9
3.5 Determine Belt Arrangement and Measure Internal Width of Structure 9
3.6 Determine Proper Segmented Transfer Plate Width 11
3.7 Segmented Transfer Plate Selection 13
3.8 Segmented Transfer Plate Selection Using FLEXCO STP Gauge Kit 56668 15

Section 4 - Installation Instructions - STP 21
4.1 Segmented Transfer Plate Installation Instructions 21

Section 5 - Pre-Operation Checklist and Testing 28
5.1 Pre-Op Checklist 28
5.2 Test Run the Conveyor 28

Section 6 - Maintenance 29
6.1 New Installation Inspection 29
6.2 Routine Visual Inspection 29
6.3 Routine Physical Inspection 29
6.4 Cleaning Instructions 29
6.5 STP Wear Inspection 29
6.6 STP Maintenance Log 30
6.7 STP Maintenance Checklist 31

Section 7 - Troubleshooting 32

Section 8 - Measurement Worksheet – STP Measurement Form 33
8.1 Regular Segmented Transfer Plate Conveyor Information 33

Section 9 - STP Ordering Form 34

Section 10 - Replacement Parts 35

Section 1 – Important Information

1.1 Introduction

We at Flexco are very pleased that you have selected the Segmented Transfer Plate (STP) for your conveyor system.

This manual will help you to understand the operation of this product and assist you in making it perform to its maximum efficiency over its lifetime of service.

It is essential for safe and efficient operation that the information and guidelines presented here be properly understood and implemented. This manual will provide safety precautions, installation instructions, maintenance procedures, and troubleshooting tips.

If you have any questions or problems that are not covered in this manual, please visit our web site or contact our Customer Service Department:

Customer Service in the United States and Canada: 1-800-541-8028

Customer Service outside the United States:
www.flexco.com/NA/EN/Flexco/Contact-Us/Regional-Offices.htm

Visit www.flexco.com for other Flexco locations and products.

Please read this manual thoroughly and pass it on to any others who will be directly responsible for installation, operation and maintenance of this cleaner. While we have tried to make the installation and service tasks as simple as possible, the STP does require correct installation and regular inspections and adjustments to maintain top performance.

1.2 User Benefits

Correct installation and regular maintenance will provide the following benefits for your operation:

- Reduced conveyor downtime
- Reduced man-hour labor
- Lower maintenance costs
- Increased service life for the Segmented Transfer Plate and other conveyor components

1.3 Service Option

The Segmented Transfer Plate is designed to be easily installed and serviced by your on-site personnel. However, if you would prefer complete turn-key factory service, please contact your local Flexco Field Engineer or your Flexco Distributor.

Section 2 – Safety Considerations and Precautions

2.1 Stationary Conveyors

Before installing and operating the Segmented Transfer Plate, it is important to review and understand the following safety information. There are set-up, maintenance, and operational activities involving both stationary and operating conveyors. Each case has a safety protocol.

The following activities are performed on stationary conveyors:

- Installation
- Tension adjustments
- Plastic segment replacement
- Cleaning
- Repairs

⚠ DANGER

It is imperative that OSHA Lockout/Tagout (LOTO) regulations, 29 CFR 1910.147, be followed before undertaking the preceding activities. Failure to use LOTO exposes workers to uncontrolled behavior of the Segmented Transfer Plate caused by movement of the conveyor belt. Severe injury or death can result.

Before working:

- Lockout/Tagout the conveyor power source
- Disengage any takeups
- Clear the conveyor belt or clamp securely in place

⚠ WARNING

Use Personal Protective Equipment (PPE):

- Safety eyewear
- Hardhats
- Safety footwear
- Gloves (especially when welding)

Close quarters, springs, and heavy components create a worksite that compromises a worker's eyes, feet, and skull.
PPE must be worn to control the foreseeable hazards associated with conveyor maintenance. Serious injuries can be avoided.

2.2 Operating Conveyors

There are two routine tasks that must be performed while the conveyor is running:

- Inspection of the STP performance
- Dynamic troubleshooting

⚠ DANGER

Every Segmented Transfer Plate is an in-running nip hazard. Never touch or prod an operating STP. Transfer plate hazards can cause instantaneous amputation and entrapment.

⚠ WARNING

Never adjust anything on an operating transfer plate. Unforeseeable belt projections and tears can catch on transfer plates and cause violent movements of the transfer plate segment or structure. Flailing hardware can cause serious injury or death.

⚠ WARNING

Transfer plate segments can become projectile hazards. Stay as far from the transfer plate as practical and use safety eyewear and headgear. Projectiles can inflict serious injury.

Section 3 – Pre-installation Checks and Options

This section will address the proper selection of the Segmented Transfer Plate (STP). It is important that you determine the length, width, and location of the transfer plate so you can properly install the Flexco Segmented Transfer Plate (STP). Failure to follow this procedure will result in deficient product performance. It is extremely important that the length of the transfer plate, the width of the transfer plate, and the selection of the transfer plate segments are done in accordance to this installation manual in order to have a successful product installation.

3.1 Checklist

- Check that the Segmented Transfer Plate (STP) size is correct for the beltline width.
- Check the Segmented Transfer Plate (STP) carton and make sure all the parts are included.
- Familiarize yourself with the components.
- Review the "Tools Needed" list on the top of the installation instructions.
- Inspect the belt and splice(s) for damage (tears, gouges, raised splices, etc.) that may interfere with the Segmented Transfer Plate (STP).
- Segmented Transfer Plates are not generally recommended for use on impression cover, textured or cleated belts.
- Determine the material flow or direction of the movement of the belt.
- Determine the type of conveyor you have (S-Curve, Straight, Center Drive, etc)
- Check the conveyor site:
  — Will the Segmented Transfer Plate (STP) be installed on a power turn?
  — Will the drive pulley of the 1st conveyor belt be level with the tail pulley of the 2nd conveyor belt?
  — Will the Segmented Transfer Plate be welded or fastened to the structure?
  — Is the install on an open head pulley requiring mounting structure?
  — Are there obstructions that may require Segmented Transfer Plate (STP) location adjustments?
  — Will the belt be reversing during regular operation?

CAUTION: All parts of the Segmented Transfer Plate (STP) must be firmly attached to the belt conveyor structure and be properly welded, bolted, or anchored in compliance with your company's policies, specifications, and any applicable legal or regulatory requirements prior to installation and use.

3.2 Segmented Transfer Plate Component Identification

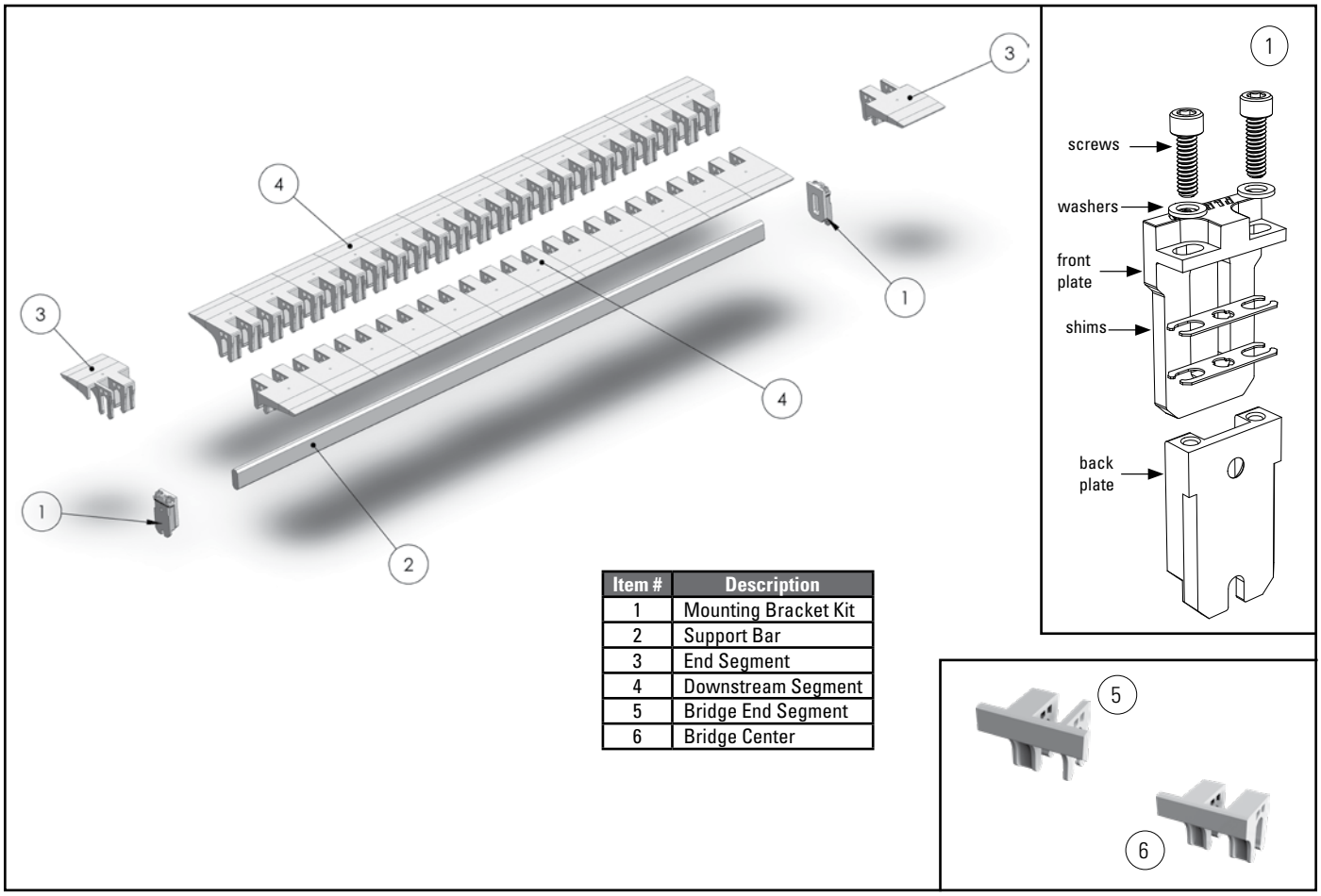

Item #	Description
1	Mounting Bracket Kit
2	Support Bar
3	End Segment
4	Downstream Segment
5	Bridge End Segment
6	Bridge Center

Flexco Segmented Transfer Plates are designed to absorb the damage of a foreign object and protect the belt from any injury while maintaining product flow. The transfer plate was designed to be compatible with polybags, nylon bags, small packages, and general parcel and material.

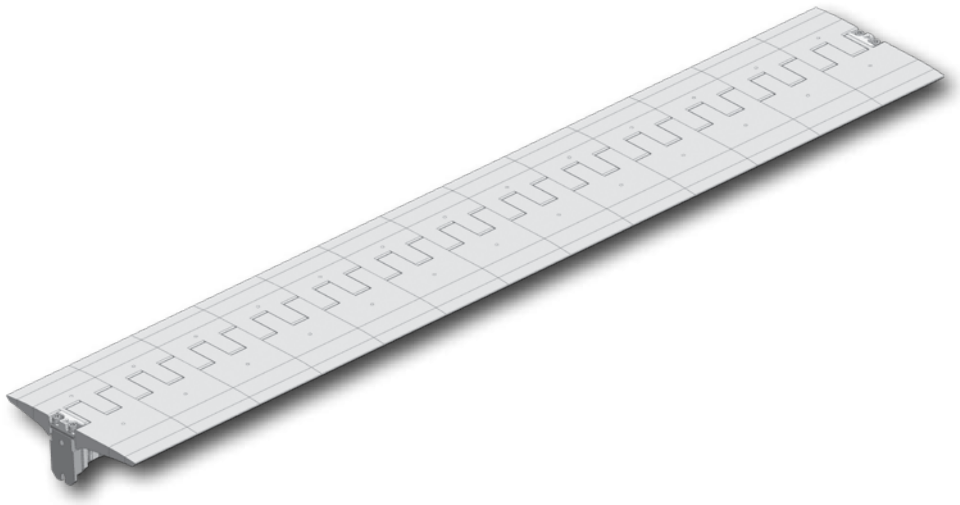

3.3 Tools Required for Installation

The following tools are required for the installation. Please note that some tools are optional, based on the preferred installation method. In this installation manual, we will describe both methods.

Welding Method (preferred)

Measurement gauge: Flexco part number 56668 (56667-For bridge segments)

- Tape Measure
- Straight edge
- 5/32" Allen Wrench
- Rubber Mallet
- Marking Pen/Soap Stone
- Hand Held Band Saw or Hack Saw equipped for metal and plastic cutting
- Welder
- Welding Accessories
- Thread Locking Agent

Bolt Mount (requires drilling)

Measurement gauge: Flexco part number 56668 (56667-For bridge segments)

- Tape Measure
- Straight edge
- 5/32" Allen Wrench
- Rubber Mallet
- Marking Pen/Soap Stone
- Hand Held Band Saw or Hack Saw equipped for metal and plastic cutting
- H Drill Bit (or 17/64")
- Transfer Punch
- #10 Flat head cap screw 1" long (2)
- #10 Socket head cap screw 1" long (2)
- #10 Flat washers (4)
- #10 Lock washers (4)
- #10 Nuts (4)

3.4 Conveyor Mounting Structure

The first step in installing your segment transfer plate is to verify that there is adequate structure between the belts to install the STP. In most cases, the preferred attachment method of the STP is by welding. Regardless of the preferred method, there must be adequate metallic structure to install the STP brackets. Please verify that the surfaces are firmly attached to the conveyor belt structure.

- If structure is not available to attach mounting brackets, please add the necessary structure to allow for proper installation.

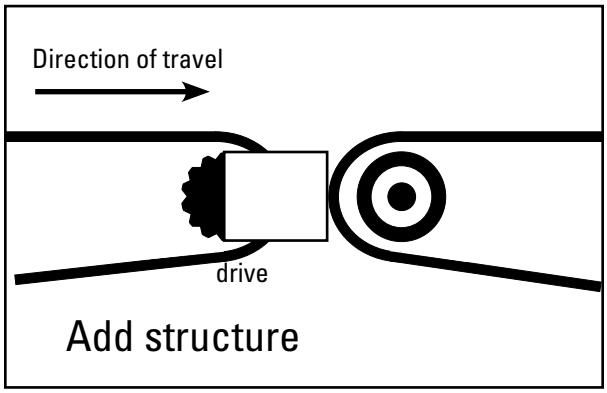

- In the particular case of waterfall conveyor arrangements (incline or decline configurations) there may be gaps where the conveyors meet. Make sure there is adequate structure to mount the transfer plate mounting brackets at the point of installation. If necessary, add a support plate to ensure safe and proper installation of the Segmented Transfer Plate mounting brackets.

3.5 Determine Belt Arrangement and Measure Internal Width of Structure

In order to properly select the correct STP, the conveyor belt configuration needs to be determined and the internal width of the structure where the STP will be installed needs to be measured.

Please select the closest conveyor belt arrangement where you plan to install the STP and measure the distance between the pulleys where the transfer plate will be positioned:

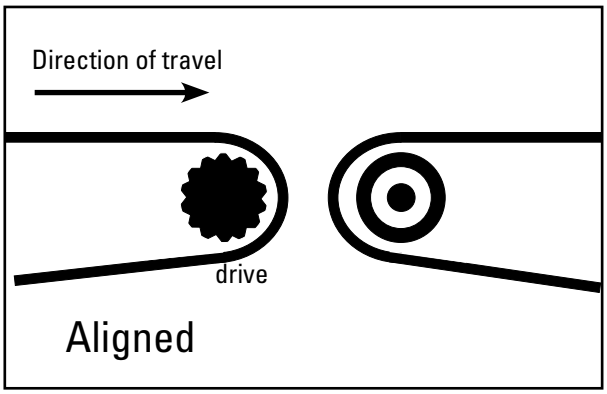

1. Horizontal to Horizontal Conveyors Both conveyors are aligned and the belts have the same direction of travel. This arrangement is usually level.

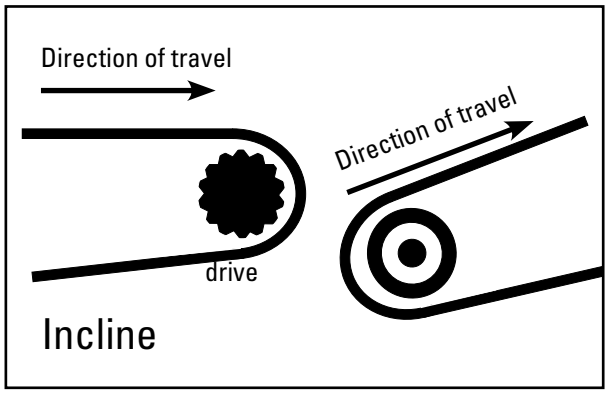

2. Horizontal to Incline Conveyors
Both conveyors are aligned and the belts have the same direction of travel. The first belt will feed the second belt. The second belt will have an upward direction.

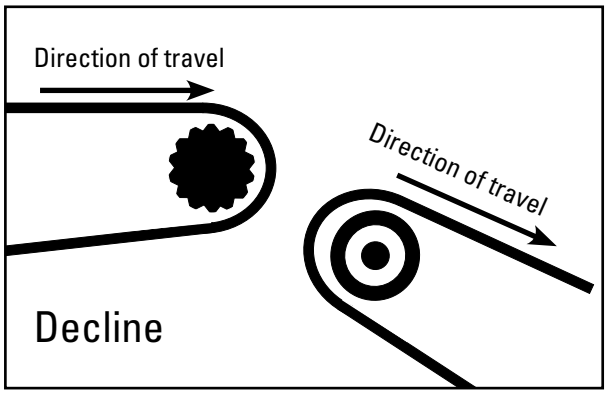

3. Horizontal to Decline Conveyors
Both conveyors are aligned and the belts have the same direction of travel. The first belt will feed the second belt. The second belt will have a downward direction.

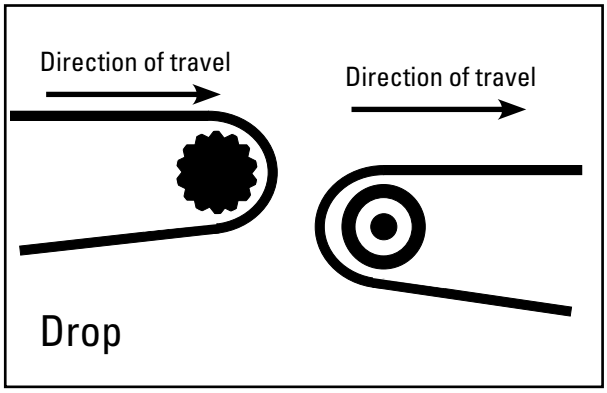

4. Horizontal to Horizontal Drop Conveyors Both conveyors are aligned, but not level and the belts have the same direction of travel. The first belt will feed the second belt. There is a clear drop between the belts.

Measure Internal Width of Structure (Dimension A)

Once that the type of conveyor belt arrangement has been determined, measure the interior width of the structure. The measurement should be done at the widest point of the interior of the structure, where the transfer plate will be positioned.

Measure the inside of the structure in order to determine the length of the transfer plate (Dimension A) at the point of the desired installation. This measurement will be required to properly select the transfer plate and adequately install the plastic segments of the transfer plate.

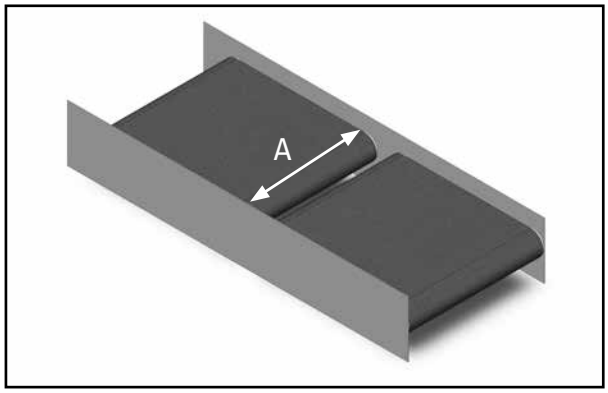

3.6 Determine Proper Segmented Transfer Plate Width

The selection of the transfer plate is a delicate process. In order to properly go about this operation please use a Flexco measurement gauge (part number 56668 or 56667 for bridge segments) and make sure you have identified the conveyor arrangement and identified Dimension "A" (page10).

The first thing to determine is the dimension that the transfer plate will have to bridge, or Dimension "B." This dimension is measured by using a straight edge and a tape measure. The dimension is taken 1/2" (13 mm) to 1-1/2" (38 mm) below a line between the tangent points on the pulleys. Each conveyor configuration will require a specific measuring technique. Please follow the diagrams below:

Horizontal to Horizontal Conveyors

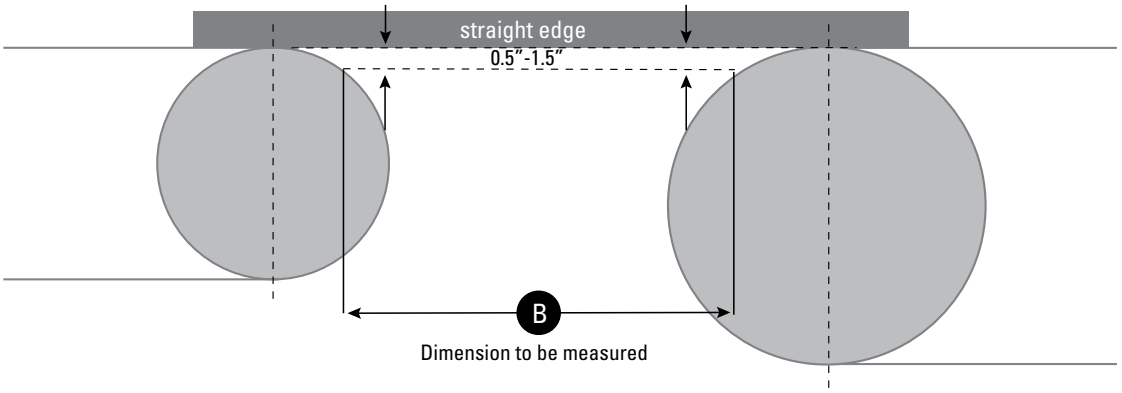

Dimension "B" will be obtained by locating a straight edge between the center lines of the pulleys. The dimension will be obtained by offsetting a parallel line towards the center of the pulley. The total offset should be between 1/2" (13 mm) to 1.5" (38 mm) below a line between the tangent points on the pulleys for most applications. The "B" dimension should be obtained by measuring the distance between the pulleys where the offset line intersects the outside diameter of the pulleys.

Horizontal to Incline Conveyors

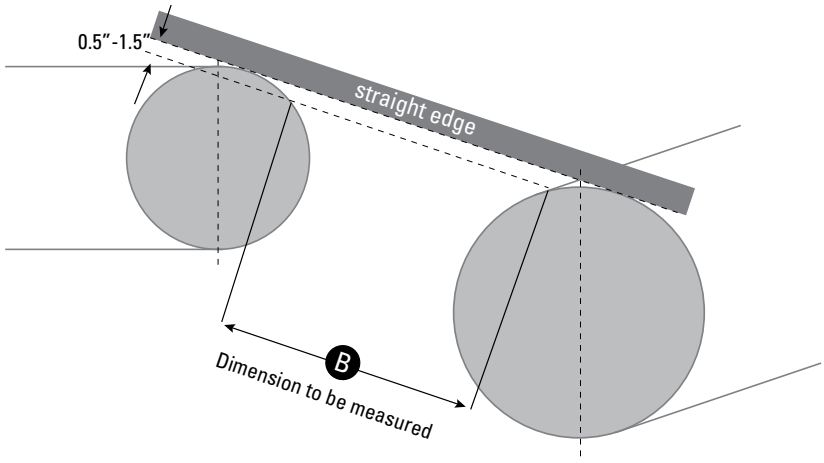

Dimension "B" will be obtained by locating a straight edge between the center lines of the pulleys. The dimension will be obtained by offsetting a parallel line towards the center of the drive pulley. The total offset should be between 1/2" (13 mm) to 1.5" (38 mm) below a line between the tangent points on the pulleys for most applications. The "B" dimension should be obtained by measuring the distance between the intersection of the offset line and the drive pulley outer diameter and the trailing pulley 12 o'clock position.

Horizontal to Decline or Drop Conveyors

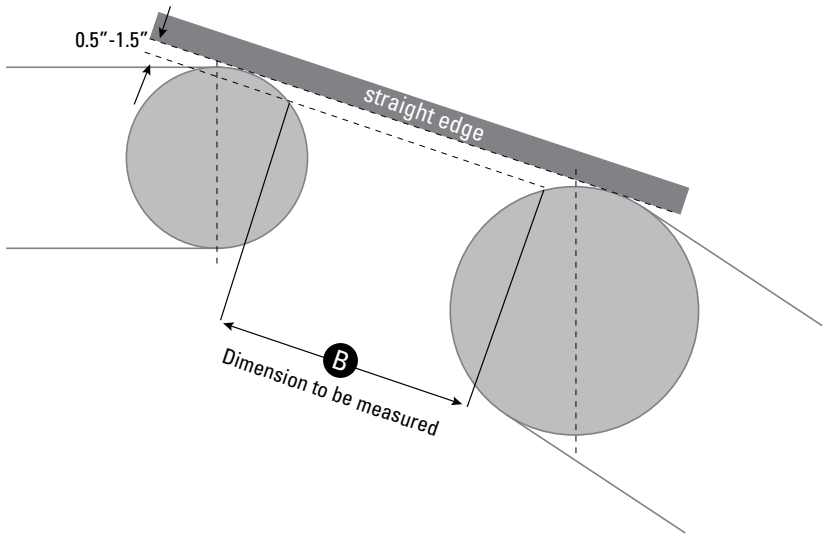

Dimension "B" will be obtained by locating a straight edge between the center lines of the pulleys. The dimension will be obtained by offsetting a parallel line towards the center of the drive pulley. The total offset should be between 1/2" (13 mm) to 1.5" (38 mm) below a line between the tangent points on the pulleys for most applications. The "B" dimension should be obtained by measuring the distance between the intersection of the offset line and the drive pulley outer diameter and the trailing pulley 12 o'clock position.

Installation Hints:

The placement of the STP can or could be between 1/2" to 1.5" below the crown of the pulley. For large pulley diameters, please contact Flexco Customer Service.

3.7 Segmented Transfer Plate Selection

Once you have obtained Dimensions "A" and "B," you will have to select the proper transfer plate item code so you can order your installation kit. Flexco Segmented Transfer Plates can cover horizontal to horizontal or waterfall conveyor applications with gaps from 4" (100 mm) to 10" (254 mm) in 1" (25 mm) increments. For gaps smaller than 4" (100 mm), please refer to installation operation manual X4657 (Narrow Gap Segmented Transfer Plate).

IMPORTANT NOTE: In the event that the Segmented Transfer Plate requires an offset installation, please make sure the shorter segment is installed upstream (towards the head pulley or against the direction of travel). The downstream plastic segment (longer segment) should be installed towards the trailing pulley (in the direction of travel).

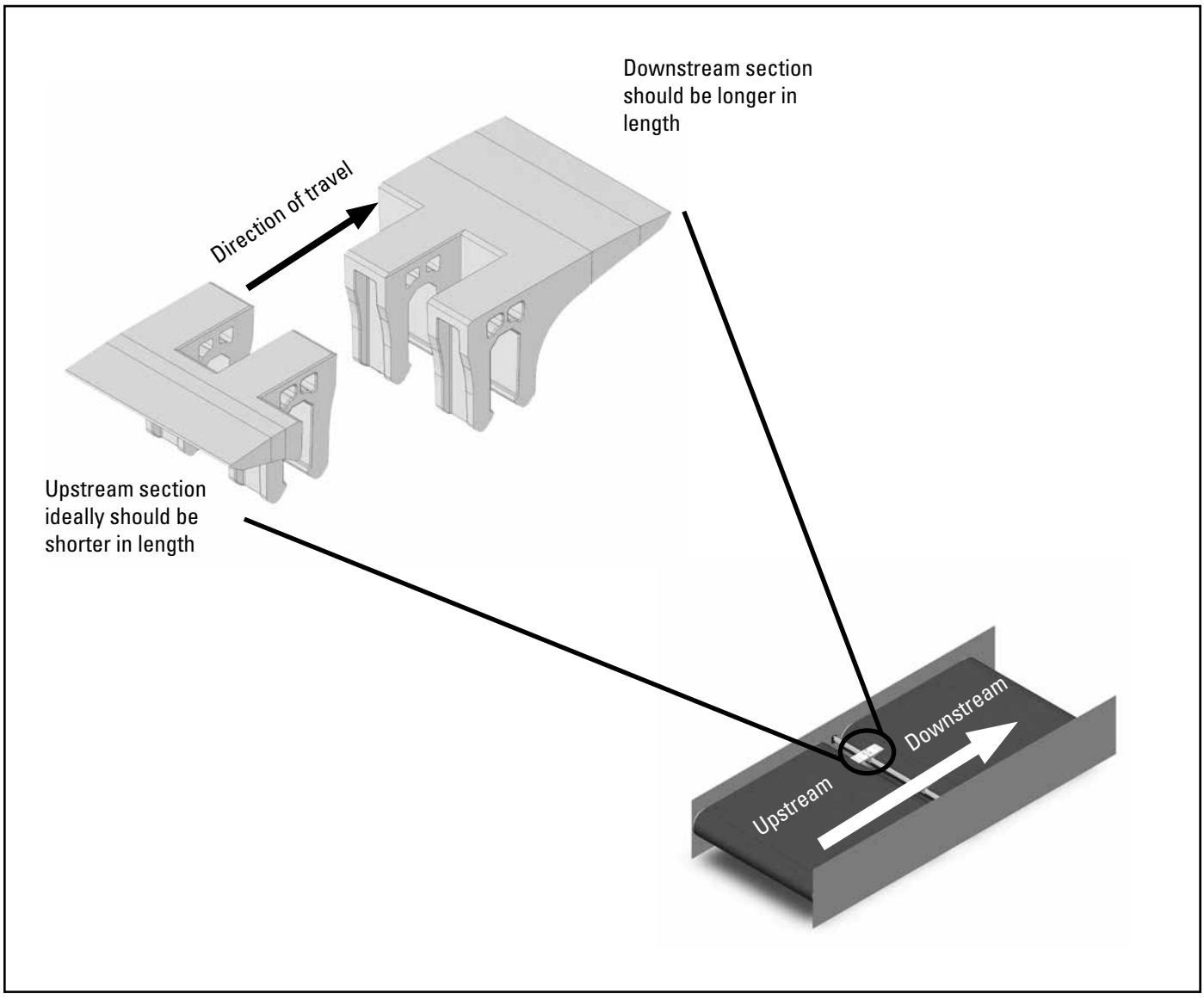

Section 3 - Pre-installation Checks and Options (cont.)

Using the information obtained in steps 3.4 to 3.6 and the following table to determine the proper item code to order. An alternative method to determine your kit is described in section 3.7.

Conveyor width Dimension A	Transfer width - Dimension B									
	4″	5″	6″	6″ optional	7″	7″ optional	8″	8″ optional	9″	10″
	Item code	Item code	Item code	Item code	Item code	Item code	Item code	Item code	Item code	Item code
Between 4" to 26"	56100	56104	56108	56112	56116	56120	56128	56132	56140	56148
Between 26.1" to 38"	56101	56105	55609	56113	56117	56121	56129	56133	56141	55649
Between 38.1" to 44"	56181	56182	56183	56184	56185	56186	56187	56188	56189	56190
Between 44.1" to 50"	56102	56106	56110	56114	56118	56122	56130	56134	56142	56150
Between 50.1" to 60"	56102	56107	56111	56115	56119	56123	56131	56135	56143	56151

In the table above, you can use Dimension A (internal width of conveyor structure) and Dimensions B (gap you want to cover with the STP).

For illustration, let's consider a conveyor with an internal conveyor width of 60" and a gap between rollers of 9". In this case, we would select the line where the 60" measurement is located and use column 9" to determine the ITEM CODE to be ordered. In this case, you should select ITEM CODE 56143.

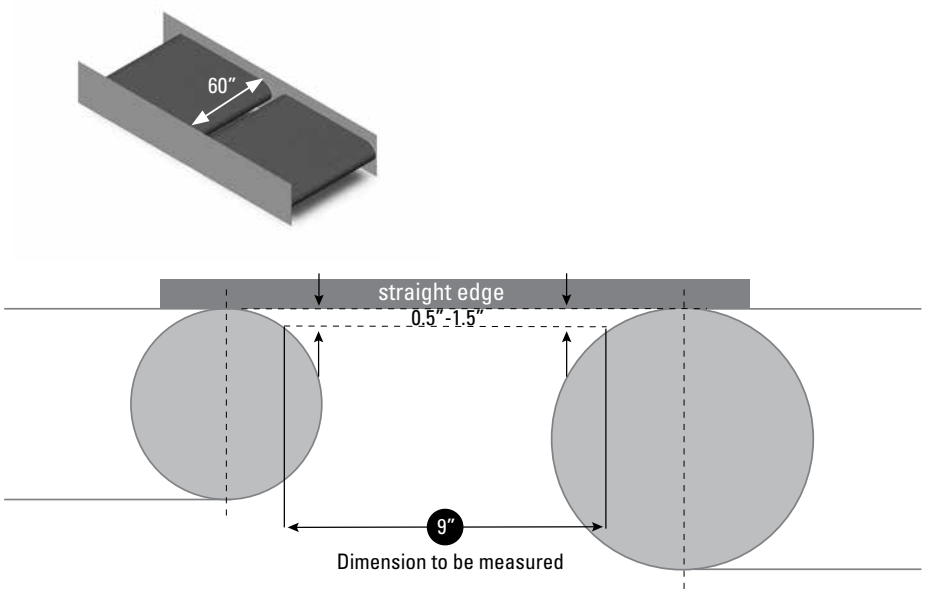

Conveyor width Dimension A	Transfer width - Dimension B									
	4″	5″	6″	6″ optional	7″	7″ optional	8″	8″ optional	9″	10″
	Item code	Item code	Item code	Item code	Item code	Item code	Item code	Item code	Item code	Item code
Between 4" to 26"	56100	56104	56108	56112	56116	56120	56128	56132	56140	56148
Between 26.1" to 38"	56101	56105	55609	56113	56117	56121	56129	56133	56141	55649
Between 38.1" to 44"	56181	56182	56183	56184	56185	56186	56187	56188	56189	56190
Between 44.1" to 50"	56102	56106	56110	56114	56118	56122	56130	56134	56142	56150
Between 50.1" to 60"	56102	56107	56111	56115	56119	56123	56131	56135	56143	56151

3.8 Segmented Transfer Plate Selection Using FLEXCO STP Gauge Kit 56668

Selecting the proper transfer plate can also be done with the use of the Flexco STP Gauge Kit (Part Number 56668) specifically designed to be used with the Flexco Segmented Transfer Plate.

The STP Gauge Kit contains 10 transfer plate profile keys. Each key allows the user to measure the gap between the pulleys in a precise fashion, while providing the necessary installation clearances required to ensure proper fit of the transfer plate.

DANGER: It is imperative that OSHA Lockout/Tagout (LOTO) regulations, 29 CFR 1910.147, be followed before undertaking the preceding activities. Failure to use LOTO exposes workers to uncontrolled behavior of the belt. Severe injury or death can result. Do not attempt any of the preceding activities on a live conveyor belt.

Following the same procedure as in step 3.4.1, determine the conveyor arrangement you are about to measure. Once that the type of conveyor belt arrangement has been determined, measure the interior width of the structure.

The measurement should be done at the widest point of the interior of the structure where the transfer plate will be positioned, this measurement will determine the total length of the transfer plate.

Measure the inside of the structure in order to determine the length of the transfer plate (Dimension A) at the point of the desired installation. This measurement will be required to properly select the transfer plate length in combination with the Flexco STP key (Part number: 56668).

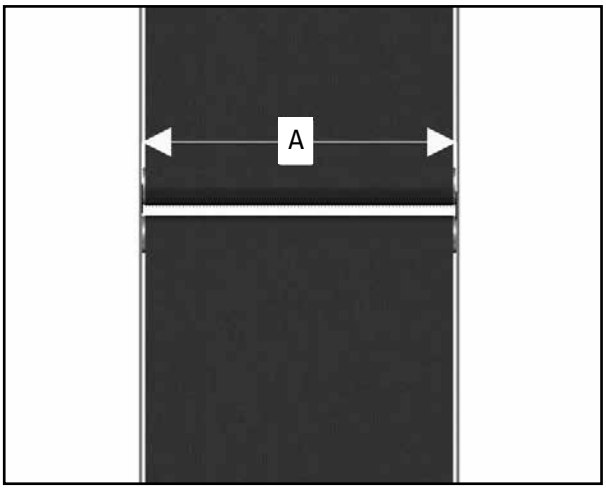

Section 3 - Pre-installation Checks and Options (cont.)

Once you have determined dimension “A” (overall width of the conveyor), select the STP gauge key that properly fits in between the pulley where the transfer plate will be installed.

In order to select the proper STP gauge key, you should consider the approximate distance that the transfer plate should cover and the correct position of the STP gauge key relative to the crown of the pulley.

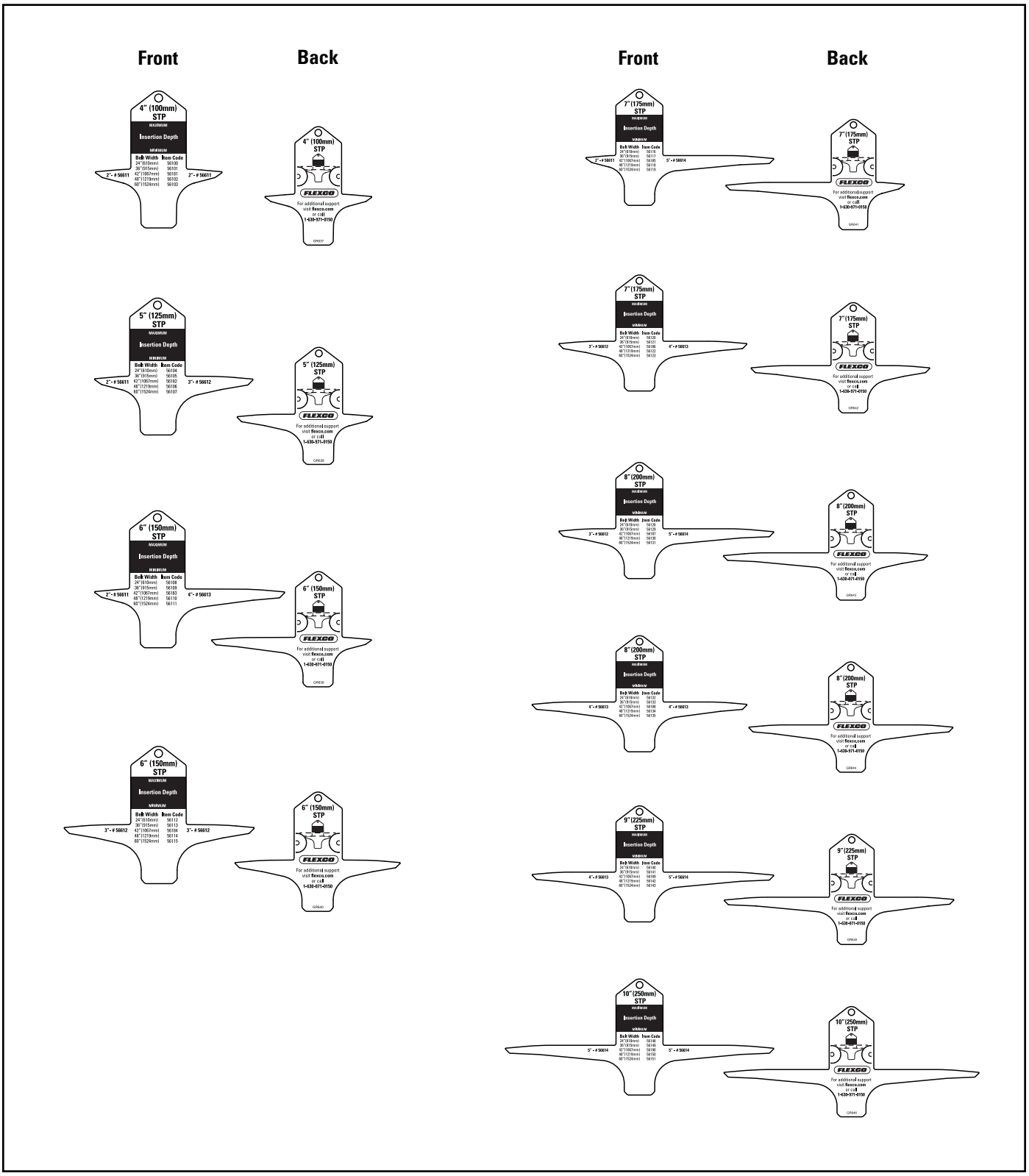

Section 3 - Pre-installation Checks and Options (cont.)

Determining the correct transfer plate item number and its location is a process of trial and error. We recommend that you prepare for the measurement process with an STP gauge key and measure the gap between the pulley until you achieve the correct fit between the STP gauge key and the pulleys. The following example will explain you the proper way to use the STP gauge key and how to select the correct Segmented Transfer Plate item code for ordering.

Select the STP gauge key you believe will fit best the gap you are trying to bridge. Insert the key between the two pulleys and make sure you place the key at the center of the conveyor width (Dimension A). This is particularly important as some conveyors have some crowning.

The key should be inserted in the mid (center) of the span between the structure of the conveyor belt. This location can be obtained by dividing Dimension A in half (A/2).

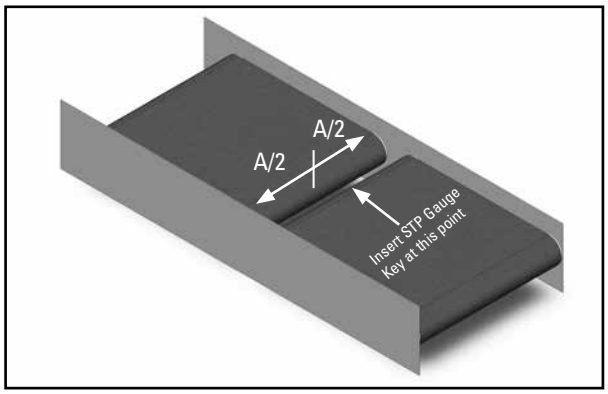

When inserting the STP gauge key, you should have a minimum distance between the top of the STP profile and the tangent point of the belt and the pulley of no less than ½" (12.5 mm) in smaller diameter pulleys. For large diameter pulleys, the distance should not exceed 1.5" (38 mm). The bottom corner of the transfer plate plastic segment should have full contact with the belt and the key should rest level to the imaginary line that joins the crowns of the pulleys.

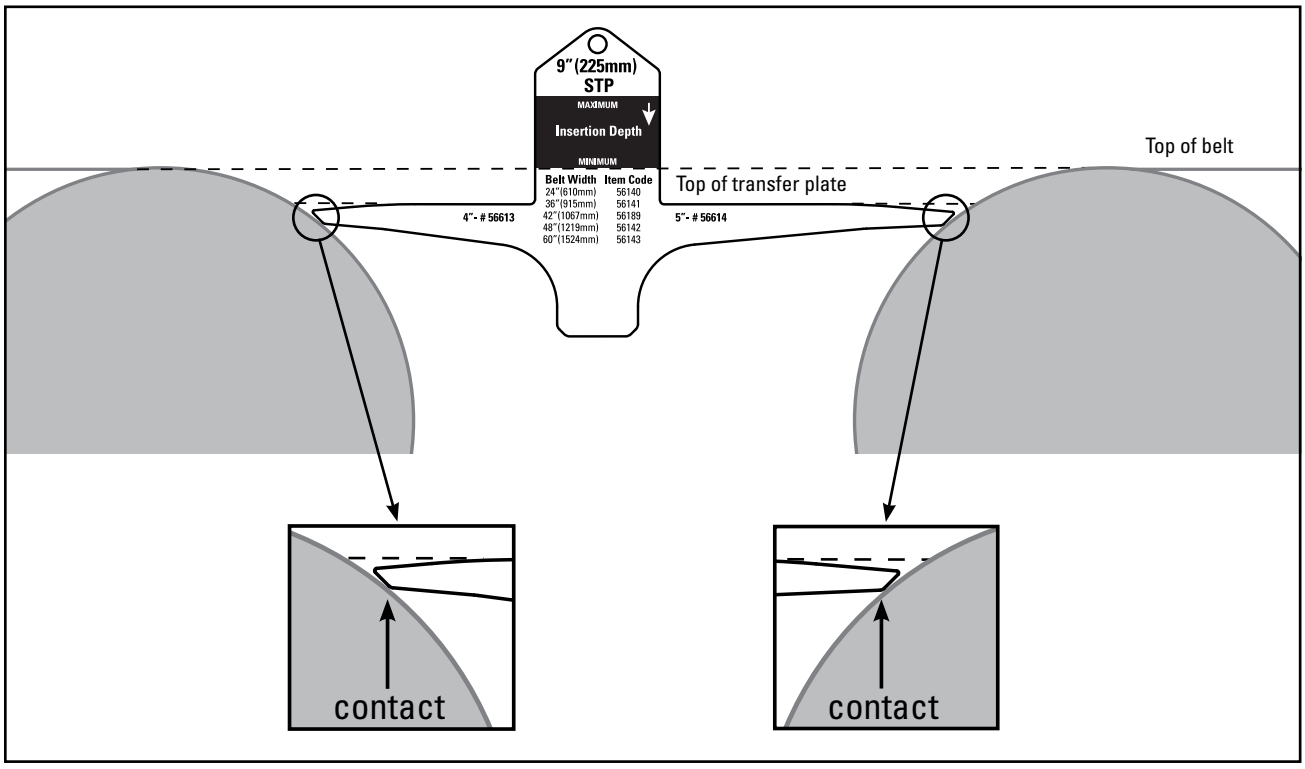

Section 3 - Pre-installation Checks and Options (cont.)

The ideal placement of the key should look similar to the figure below:

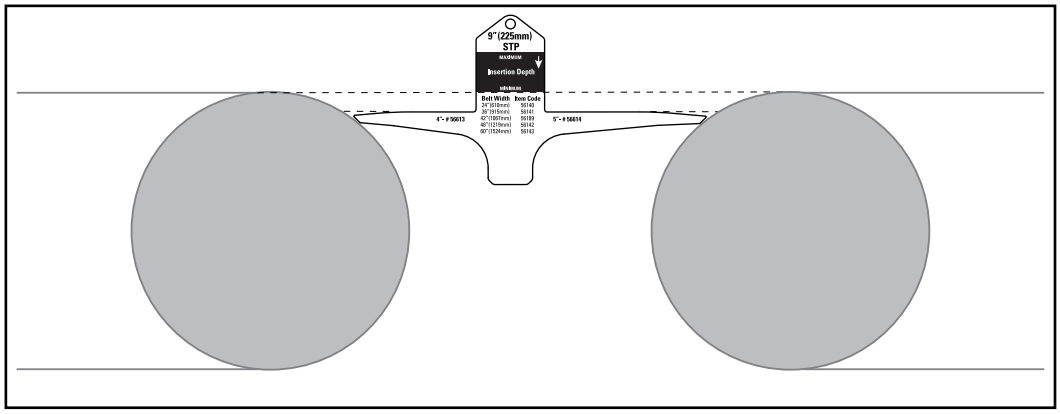

Incorrect placement of the STP Gauge Key, as described in the following examples, could lead to incorrect STP selection.

WARNING: Incorrect placement of the STP Gauge key will result in erroneous readings and will lead to the selection of the incorrect item code.

Incorrect Gauge Placement

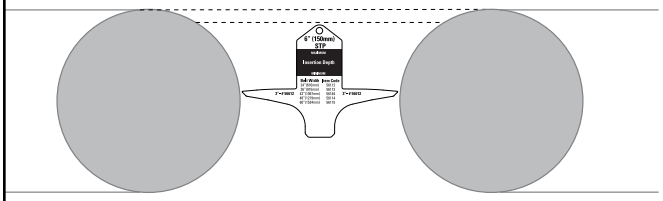

Too low between pulleys

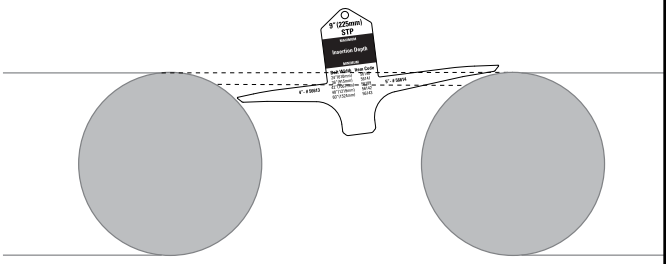

Misaligned between pulleys

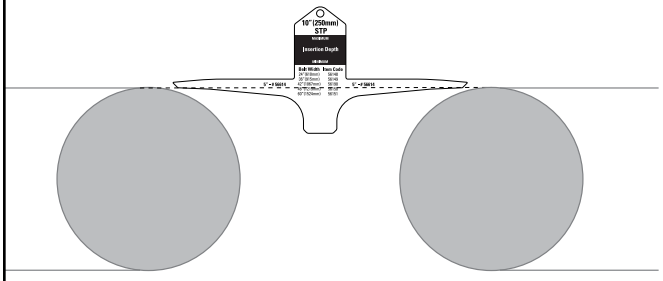

Too high between pulleys

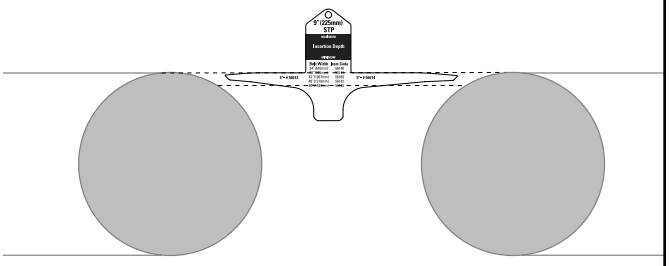

No contact with pulleys

Section 3 - Pre-installation Checks and Options (cont.)

Once the STP gauge key has been correctly placed and you have determined the width of the conveyor belt (Dimension A), select the Segmented Transfer Plate ITEM CODE you need to order from your Flexco distributor.

Kit selection example: In order to illustrate the process, let's suppose that Dimension A (internal width of the conveyor belt) is 60" and a 9" transfer plate will properly bridge the gap between the pulleys.

We will proceed to identify the 60" line and select ITEM CODE 56143 as the kit we need to order.

Installation Hint: Double-check that the actual STP segments properly fit the installation

Installation Hint: The use of equal length plastic segments is ideal in most circumstances and facilitates final placement.

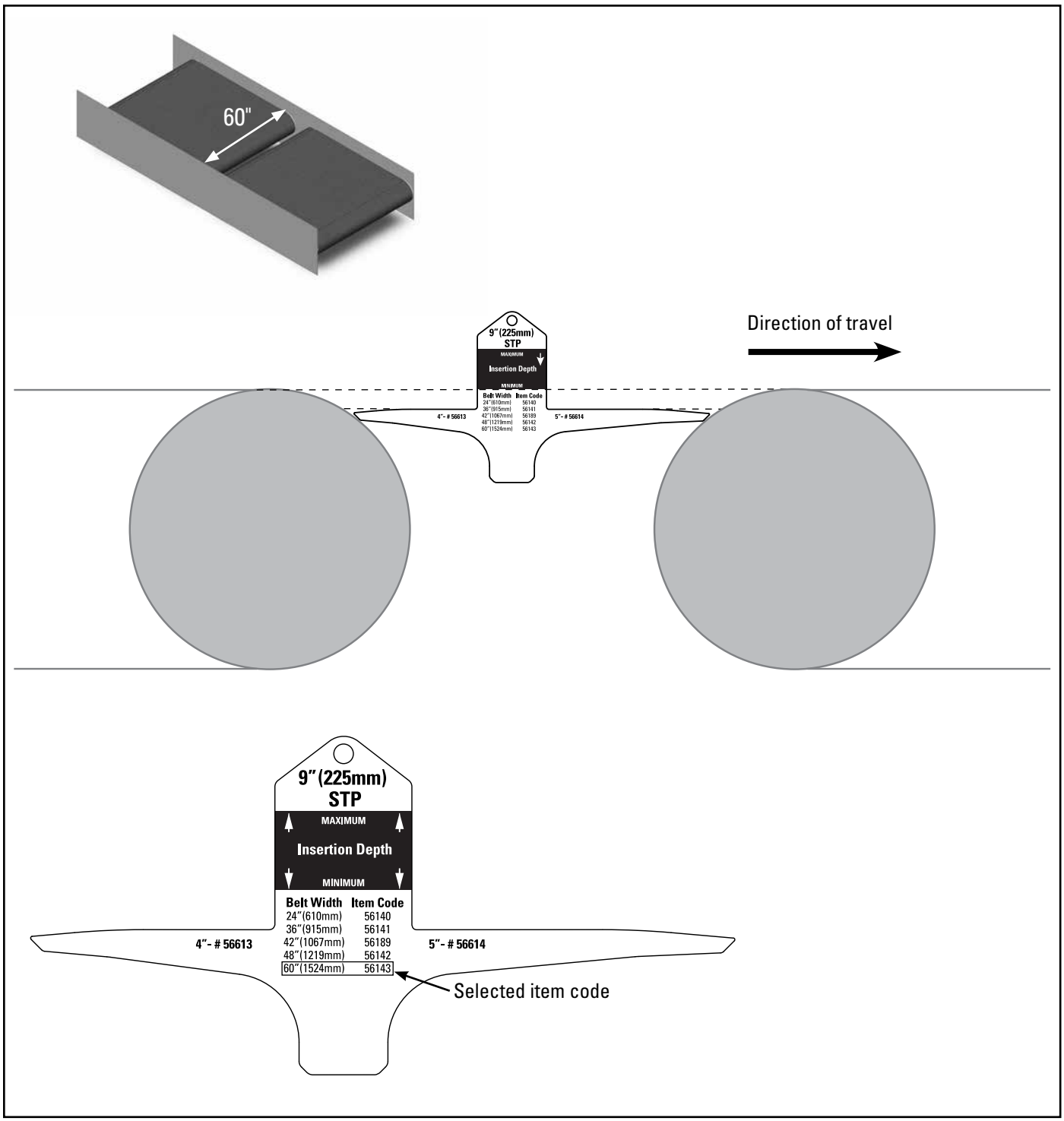

Section 3 - Pre-installation Checks and Options (cont.)

IMPORTANT NOTE: In the event that the segment transfer plate requires an offset installation, make sure the short segment is installed upstream (towards the head pulley or against the direction of travel). The downstream plastic segment (long segment) should be installed towards the trailing pulley (direction of travel).

Installation Hint: Make sure that you have ample room for the Segmented Transfer Plate mounting bracket to be installed to the structure of the conveyor belt. Verify with the gauge key that the mounting bracket properly clears the rollers and is completely accessible for installation on the back structure.

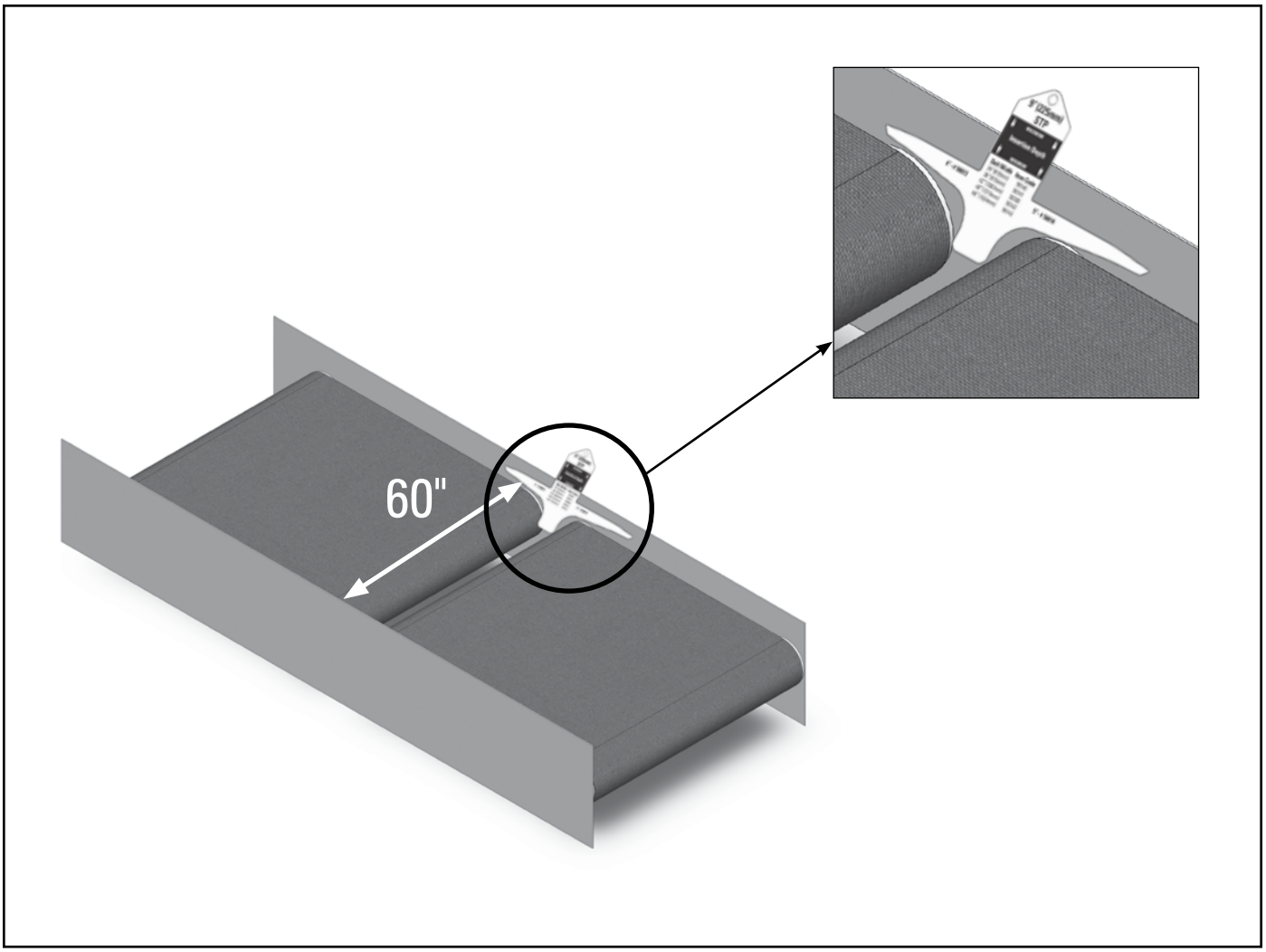

4.1 Segmented Transfer Plate Installation Instructions

CAUTION: Segmented Transfer Plate Installation Instructions – it is the user's responsibility to take the steps necessary to properly select and install the product. If you have questions or need assistance please contact Flexco using the information provided on page 4 of this manual.

Now that the STP kit has been selected and the resting position of the transfer plate has been identified, proceed with the installation of the Segmented Transfer Plate.

In this case, use the welding method as our preferred installation.

Tools Required

Welding method (preferred):

- Measurement gauge: Flexco part number 56668
- Tape Measure
- Straight edge
- 5/32" Allen Wrench
- Rubber Mallet
- Marking Pen or Chalk
- Hand Held Band Saw or Hack Saw
- Welder
- Welding Accessories
- Thread Locking Agent (Loctite or similar)

DANGER: PHYSICALLY LOCK OUT AND TAG OUT THE CONVEYOR AT THE POWER SOURCE BEFORE YOU BEGIN THE INSTALLATION. FAILURE TO FOLLOW PROPER LOTO PROCEDURES COULD RESULT IN DEATH OR SERIOUS INJURY.

Pre-Installation

- Unpack the STP from the packaging
- Verify that the correct size STP has been ordered
- Verify that the correct components are included and in the right quantities
- In most cases you will have some extra center pieces that are necessary to guarantee correct fitment

Section 4 - Installation Instructions - STP (cont.)

Installation Instructions

1. Cut the support bar 3/8" (9 mm) less than the measured internal width of the structure. Deburr/file any sharp edges.

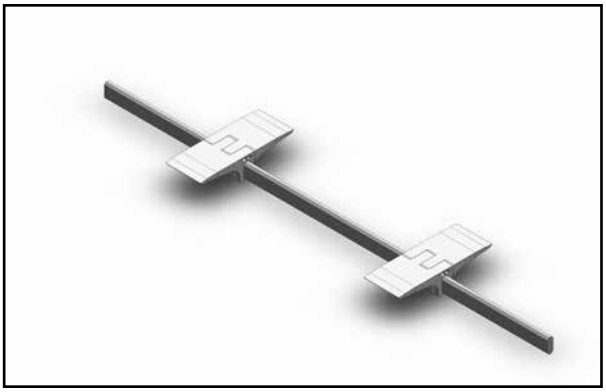

2. Slide one segment pair onto the bar from each end and position each approximately 1/4 of the total bar length from the end so that they do not rest on the top of the pulley crown or on the tapered section.

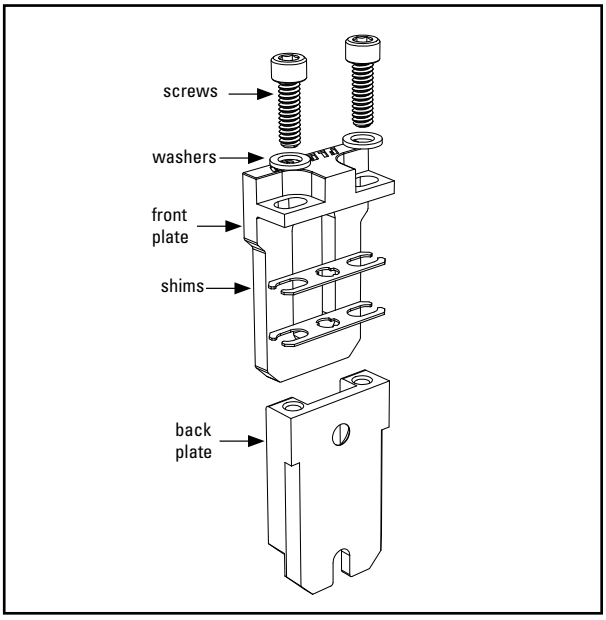

3. Stack two shims on top of back plate of each mounting bracket. Using socket head screws and washers, attach front plate to the back plate, ensuring that the shims are in place. Align the edges of the front and back plates so that the vertical edges are parallel. Tighten screws to compress shims, ensuring no interference with the pole end.

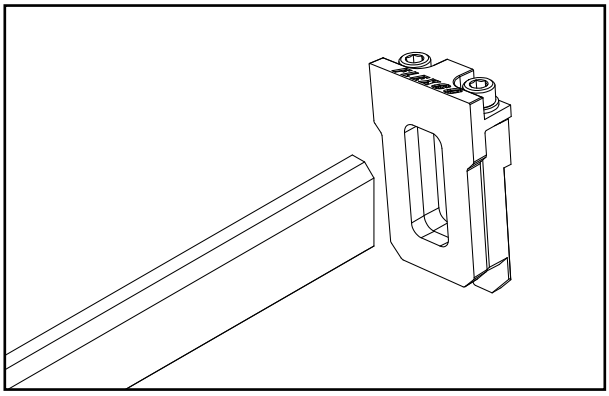

4. Slide one mounting bracket assembly onto each end of the bar. Ensure that the front plate is located in the center of the back plate slot to allow for maximum STP adjustment.

Section 4 - Installation Instructions - STP (cont.)

WARNING: Selecting an undersized or oversized Segmented Transfer Plate, or placing the STP in a position that is not the one recommended in this instruction manual, can result in nip hazard or damage the conveyor belt. The following configurations are examples of Segmented Transfer Plate installations.

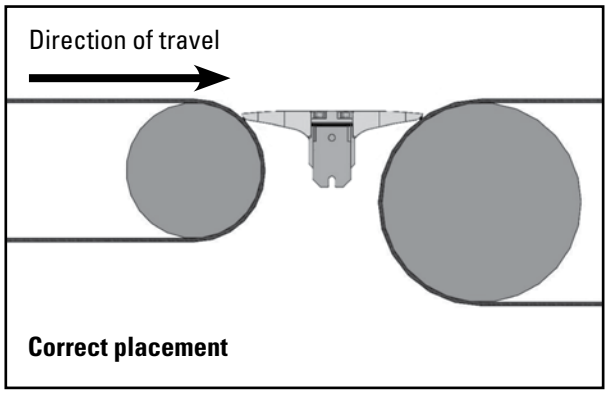

Correct STP placement: This is an example of a correct installation. The transfer plate is installed properly with adequate contact between the belt and the STP plastic segments.

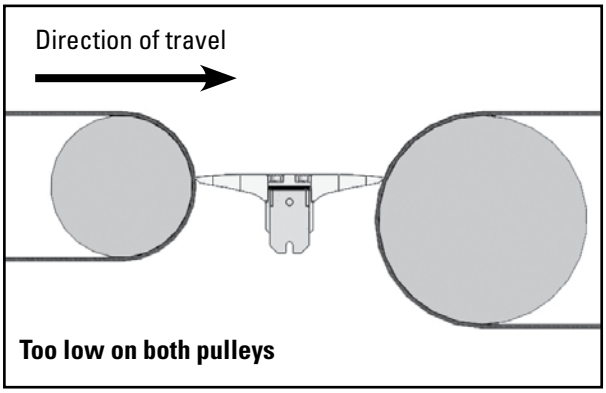

WARNING: This is an example of an incorrect installation. The transfer plate is installed below the correct placement position, it will cause the flow of material to choke between the conveyors.

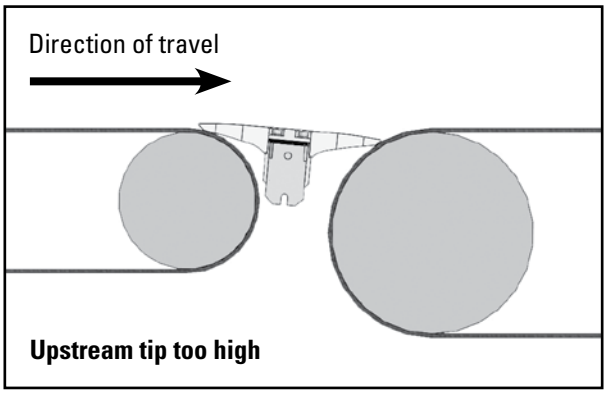

WARNING: This is an example of an incorrect installation. The transfer plate is installed above the head pulley and tilted downstream, this will create interference with the flow of material between the conveyors.

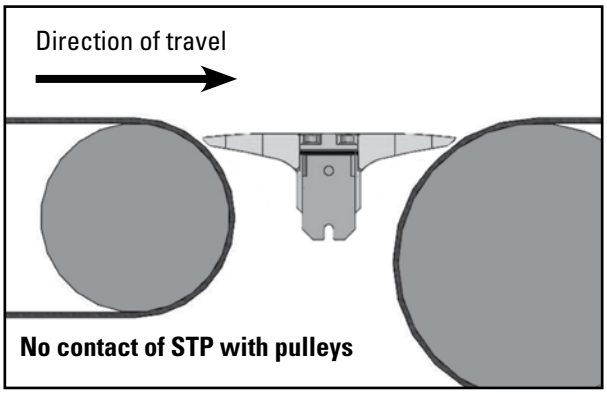

WARNING: This is an example of an incorrect installation. The transfer plate has no contact between the pulley and the plastic STP segments. Thin flat items and polybags will get caught in the gap and interfere with flow of material.

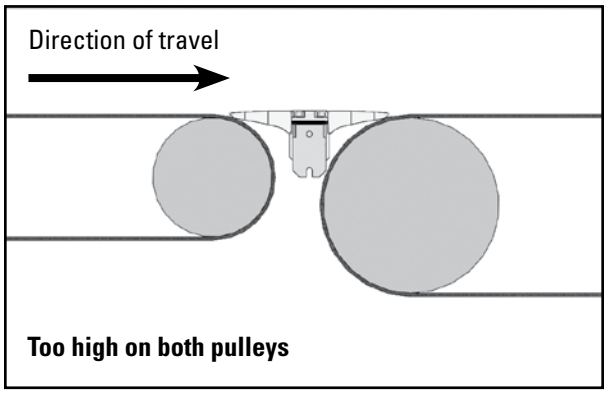

WARNING: This is an example of an incorrect installation. The transfer plate is installed above the correct placement, it will interfere with the flow of material.

Section 4 - Installation Instructions - STP

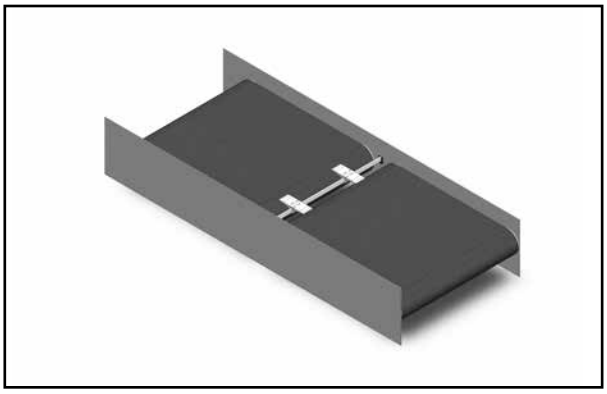

5. Position the support bar with segments and mounting brackets into the transfer gap. The resting positon of the bar and the brackets should be similar to the one identified by the STP KEY location in SECTION 3. Ensure segments are not resting on top of the pulley crown or in the tapered section.

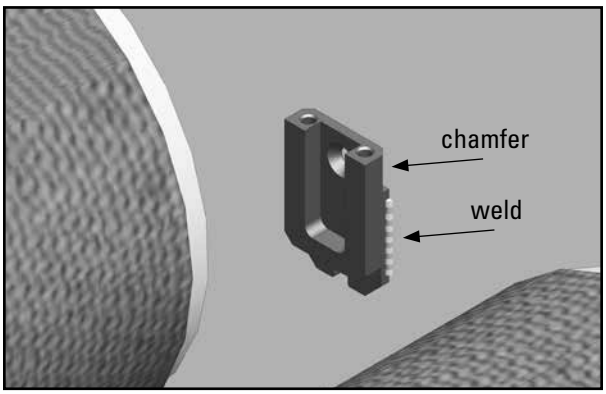

6. Welding instructions: With the assembly in place, tack weld the back plate onto the structure. Verify location after tack weld and adjust as needed.

NOTE: Do not weld on the chamfered portion of the back plate corner as a weld bead may interfere with end segment installation.

IMPORTANT NOTE: For installations where one or both of the belts have a profiled top cover, such as Longitudinal Rib (LR), Mini Rough Top (MRT), or Rough Top (RT) belting, the transfer assembly should be positioned with a 0.012" clearance (thickness of a business card) between the surface of the profiled belt and the under-side of the segment.

Installation Hints:

a. In order for the shims to stay in place, you can bend them so that they will stay put while you maneuver the assembly into place.

b. On crowned pulleys, use two shims per side to compensate for the crowning and allow for proper fitment.

c. For belts that are 48" wide or more, use a minimum of 3 segments in order to properly compensate for the belt crowning.

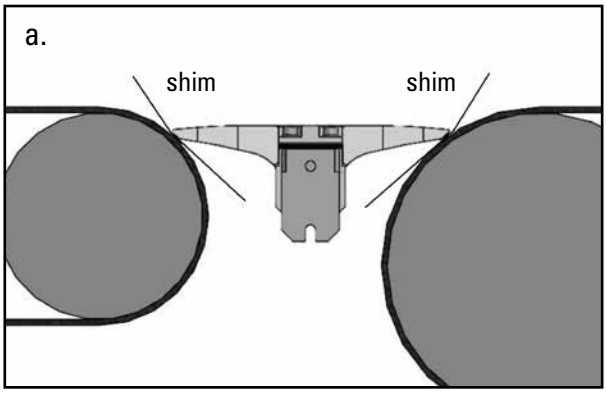

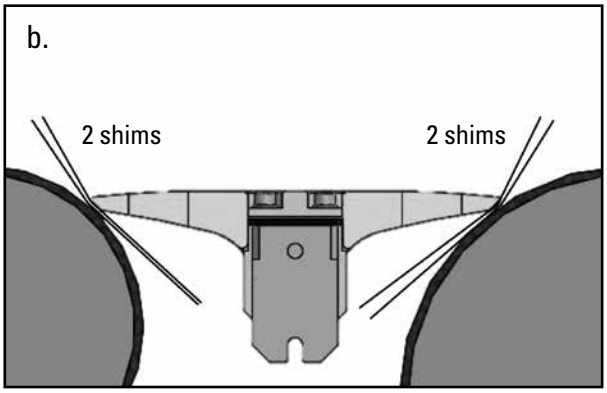

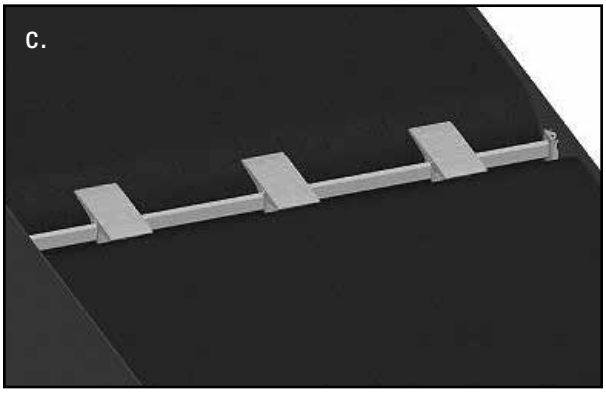

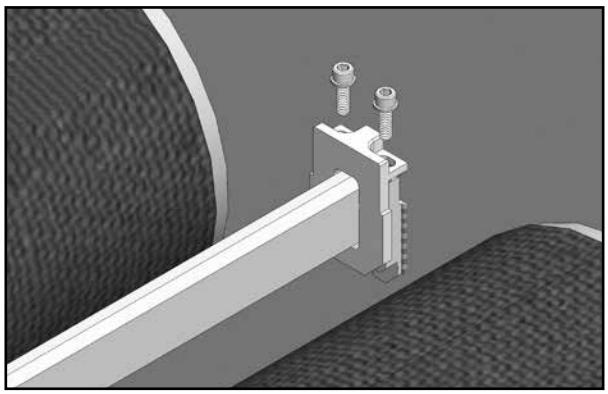

7. After verification that the tack weld has occurred, remove the socket head screws from the mounting brackets and lift the assembly with the front plates out of the transfer leaving only the back plates in place and finish welding the back plates with a 1" bead on two sides of the plate.

NOTE: Ensure that the shims are removed with the assembly taking care not to lose them.

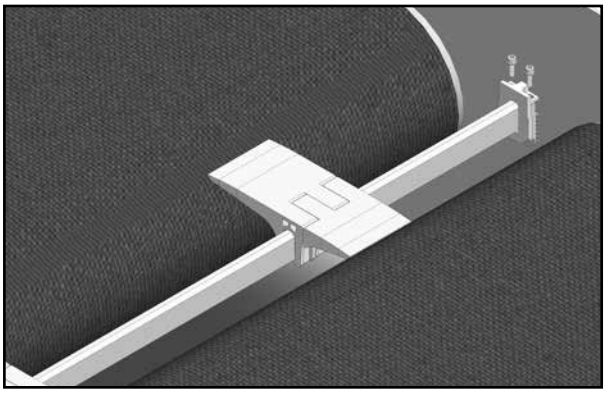

8. Slide the front plates on the mounting bar and replace the shims on top of the back plate. Then set the transfer into position on the back plates. Tighten the two socket head screws at each mounting bracket to secure the system in place.

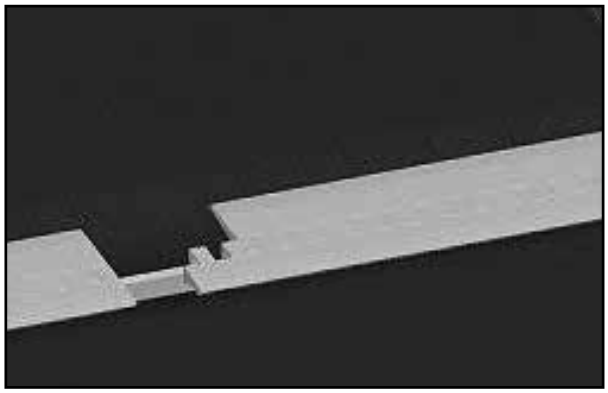

9. Install the remaining segments of the transfer plate, starting with the end segments.

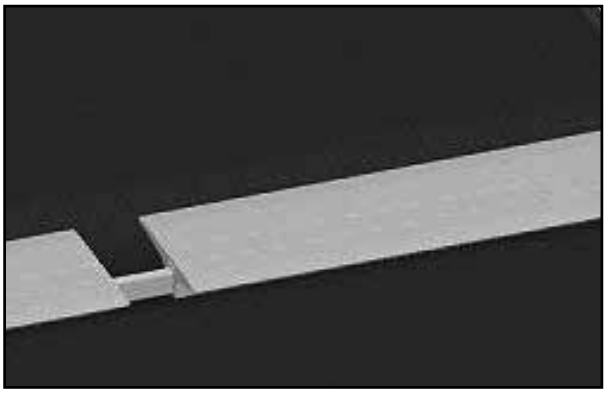

10. Install as many of the remaining segment pairs on the bar as will fit.

IMPORTANT NOTE: When segment pairs are made up of two different sized halves, it will be necessary to match the end segment length with the correct corresponding center segment. Use the STP Key as guidance, keeping in mind that the shorter segment will face upstream and the longer segment will face downstream.

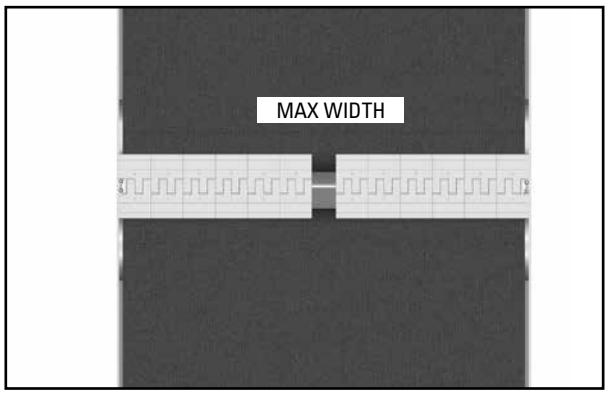

11. From the center of the bar, push the segment pairs toward the ends of the bar, ensuring that they are tightly butted against each other. Measure the gap that remains between the center-most segments to determine the size of the final segment set.

Section 4 - Installation Instructions - STP

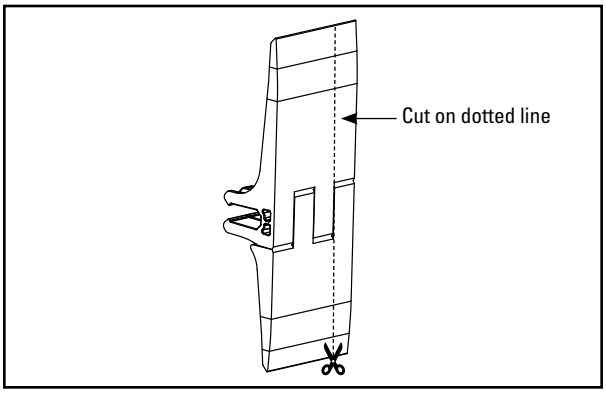

IMPORTANT NOTE:

- If MAX WIDTH is greater than 1.5" (38 mm), use table saw, band saw, circular saw, or jigsaw to cut a final segment to 1/16"-1/8" (1.5-3 mm) less than MAX WIDTH.

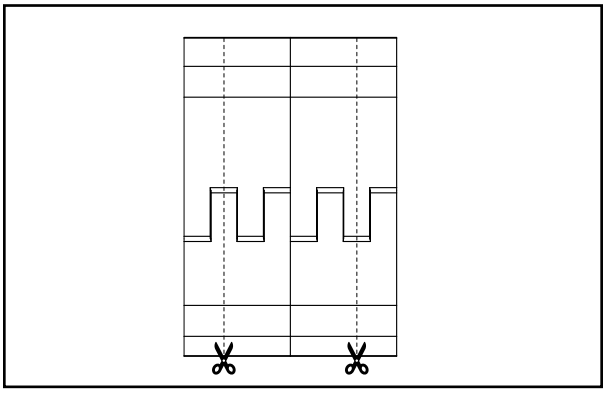

IMPORTANT NOTE:

- If MAX WIDTH is less than 1.5" (38 mm):
  a. Remove one additional segment adjacent to the gap.
  b. Measure MAX WIDTH opening and divide by 2. (X / 2)
  c. Using table saw, band saw, circular saw, or jigsaw to cut two final segment pairs 1/16"-1/8" (1.5-3 mm) less than MAX.

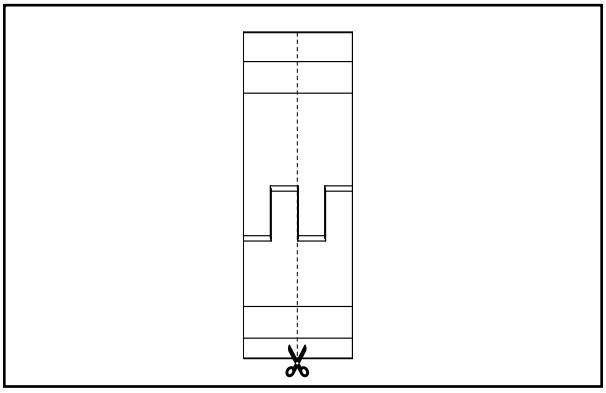

CAUTION: Do not trim more than half off a segment pair or 1-1/2" (38 mm). It is recommended to trim both segments of a segment pair while they are nested to ensure consistent segment.

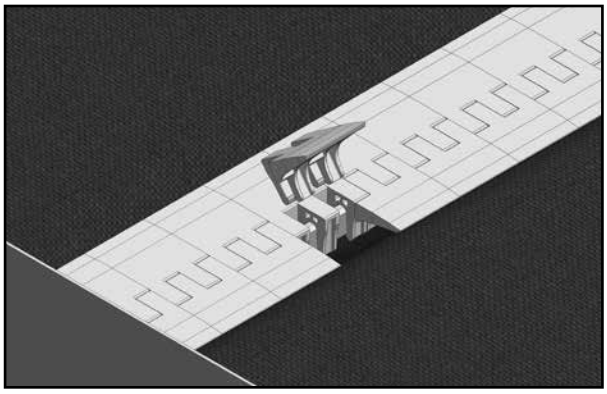

12. Install the last (trimmed) segments into the remaining gap. If the support bar does not appear centered in the gap between pulleys, loosen the socket head screws and adjust the transfer. 1/8th inch (3 mm) total adjustment is available.

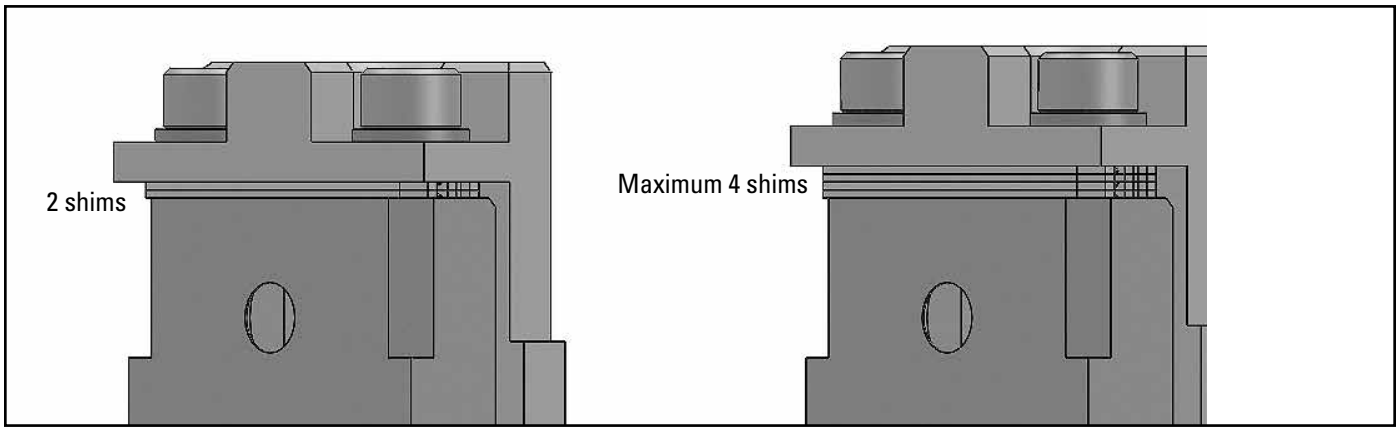

13. By adding or removing shims from the mounting brackets, the transfer can be adjusted up or down a total of 1/8th inch (3 mm). This should allow adequate adjustment for crowned pulleys or a belt with a profiled top cover.

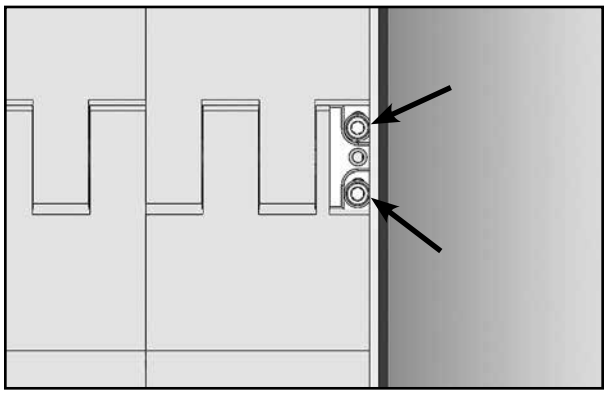

14. Once all adjustments are made, secure the screws on both sides of Segmented Transfer Plate assembly with a thread locking agent.

Section 5 - Pre-Operation Checklist and Testing

5.1 Pre-Op Checklist

- Recheck that all fasteners are tightened properly.
- Check the STP location on the belt.
- Be sure that all installation materials and tools have been removed from the belt and the conveyor area.

5.2 Test Run the Conveyor

- Run the conveyor for at least 15 minutes and inspect the STP performance.
- If performance is inadequate, stop the belt and adjust the STP using steps 12-14 of installation instructions procedure.
- Return to step 5.1 if any adjustments have occurred.

NOTE: Observing the STP when the conveyor belt is running and performing properly will help detect problems in the future.

Section 6 – Maintenance

Flexco STPs are designed to operate with minimum maintenance. However, to maintain superior performance, some service is required. When the STP is installed, a regular maintenance program should be set up. This program will ensure that the STP operates at optimal efficiency and problems can be identified and fixed before the STP suffers any damage or stops working as expected.

All safety procedures for inspection of equipment (stationary or operating) must be observed. The STP operates at the discharge end of the conveyor and is in direct contact with the moving belt. Only visual observations can be made while the belt is running. Service tasks can be done only with the conveyor stopped and the correct lockout/tagout procedures observed.

6.1 New Installation Inspection

After the new STP has run for a few days, a visual inspection must be made to ensure the STP is performing properly. Make adjustments as needed.

To ensure optimal STP performance, keep segments free of product buildup (stickers, plastic bags, debris, etc).

6.2 Routine Visual Inspection (every 2-4 weeks)

A visual inspection of the STP and belt can determine:

- If the belt looks damaged or if there are areas that are eroding.
- If a plastic segment is worn out and needs to be replaced.
- If there is damage to the STP or other transfer plate components.
- If fugitive material is caught or built up on the STP segments.
- If there is cover damage to the belt.
- If there is vibration or bouncing of the STP on the belt.

If any of the above conditions exist, a determination should be made on when the conveyor can be stopped for STP maintenance.

6.3 Routine Physical Inspection (every 6-8 weeks)

When the conveyor is not in operation and is properly locked and tagged out, conduct a physical inspection of the STP to perform the following tasks:

- Clean material buildup off of the STP segment and rod.
- Closely inspect the segments for wear and damage. Replace if needed.
- Ensure proper STP segment-to-belt contact.
- Inspect the STP rod and outer brackets for damage.
- Inspect all fasteners for tightness and wear. Tighten or replace as needed.
- Replace any worn or damaged components.
- When maintenance tasks are completed, test run the conveyor to ensure the STP is performing properly.

6.4 Cleaning Instructions

STP plastic segments need to be cleaned of any material stuck to or adhered to the top surface of the segment. If the plastic shows sign of damage or severe erosion, replace the segment.

6.5 STP Wear Inspection

Note: Belt type, belt speed, material being conveyed, installation, and other application factors will affect STP wear.

Visual inspection of missing segments or fasteners is necessary.

6.6 STP Maintenance Log

Conveyor Name/No. _____

Date: _____ Work done by: _____ Service Quote # _____

Activity: _____

Date: _____ Work done by: _____ Service Quote # _____

Activity: _____

Date: _____ Work done by: _____ Service Quote # _____

Activity: _____

Date: _____ Work done by: _____ Service Quote # _____

Activity: _____

Date: _____ Work done by: _____ Service Quote # _____

Activity: _____

Date: _____ Work done by: _____ Service Quote # _____

Activity: _____

Date: _____ Work done by: _____ Service Quote # _____

Activity: _____

6.7 STP Maintenance Checklist

STP Transfer Plate: _____ **Ordering Number:** _____

Conveyor Information:

Conveyor Number:_____ Belt Condition: _____

Belt Width: ☐ 12" (300 mm) ☐ 18" (450 mm) ☐ 24" (600 mm) ☐ 30" (750 mm) ☐ 36" (900 mm) ☐ 42" (1050 mm) ☐ 48 (1200 mm) ☐ 54" (1350 mm) ☐ 60" (1500 mm)

Head Pulley Diameter (Belt & Lagging): _____

Belt Speed:_____fpm Belt Thickness: _____

Belt Splice:_____ Condition of Splice:_____ Number of splices:_____ ☐ Skived ☐ Unskived

Material conveyed: _____

Days per week run:_____ Hours per day run:_____

Segment Life:

Date plastic transfer segment installed:_____ Date plastic transfer segment inspected:_____

Estimated plastic transfer segment life:_____

Is STP segment making proper contact with belt? ☐ Yes ☐ No

Transfer plate condition: ☐ Good ☐ Grooved ☐ Smiled ☐ Not contacting belt ☐ Damaged

Was STP Adjusted: ☐ Yes ☐ No

Bar Condition: ☐ Good ☐ Bent ☐ Worn

Lagging: ☐ Slide lag ☐ Ceramic ☐ Rubber ☐ Other ☐ None

Condition of lagging: ☐ Good ☐ Bad ☐ Other _____

STP Overall Performance: (Rate the following 1 - 5, 1 = very poor - 5 = very good)

Appearance: ☐ Comments: _____

Location: ☐ Comments: _____

Maintenance: ☐ Comments: _____

Performance: ☐ Comments: _____

Other Comments: _____

_____

_____

_____

_____

_____

Section 7 - Troubleshooting

Problem	Possible Cause	Possible Solutions
Missing plastic segments on transfer plate	If a segment is missing, it may mean that foreign object debris got caught between the surface of the belt and the segment.	Replace with a new segment of same size and length
	Damage to belt	Repair the belt
	Improper installation	Transfer plates with a gap between segments and belt as opposed to light contact on both the leading and trailing tips which they are designed for.
	Repeated use of damaged or dislodged segments	Replace with new segments of same size and length
Transfer Plate assembly flexes with movement of belt	High points on belt	Transfer plate was designed to flex with the belt movement
	Roller has uneven wear	Transfer plate was designed to tolerate system wear
	Missing screws from mounting bracket assembly	Install missing fasteners and add removable thread locker
	Pulley out of round	Remove and replace out of round pulley
Mounting screws missing	Not enough removable thread locker added during installation	Replace fastener and add removable thread locker
Excessive Vibration or noise of the Segmented Transfer Plate	Installation is too tight to the belt	Add shims to mounting bracket to decrease tension between plastic segments and belt
	Installation of Segmented Transfer Plate was not done with cardboard shims	Add shims to mounting bracket to decrease tension between plastic segments and belt
	Belt fastener hitting transfer plate	High splice profile – does not damage belt or STP. A bias splice will minimize this effect
Uneven transfer plate segment position	Mismatch component selection	The transfer plate support bar must be replaced with a correct 1.25" bar
Segmented transfer plate is misaligned	Power turn separation is mismatched with adjacent conveyor	Transfer plate on power turn needs to be installed with a slight angle such that it can accommodate the power turn tapered roller and the adjacent conveyor roller
	Power turn gap to height conveyor is mismatched	Transfer plate on power turn needs to be installed with a slight angle such that it can accommodate the power turn tapered roller and the adjacent conveyor roller
Too high or too low transfer installation	Not enough shims added during installation	Add shims between backing plate and front plate to raise transfer plate
	Too many shims added during installation	Remove shims between backing plate and front plate to lower transfer plate

Section 8 – Measurement Worksheet – STP Measurement Form

8.1 Regular Segmented Transfer Plate Conveyor Information

Conveyor Name/No. _____

Date: _____ Work done by: _____ Service Quote #: _____

Dimension A: _____ Dimension B: _____ ITEM CODE: _____

Conveyor Name/No. _____

Date: _____ Work done by: _____ Service Quote #: _____

Dimension A: _____ Dimension B: _____ ITEM CODE: _____

Conveyor Name/No. _____

Date: _____ Work done by: _____ Service Quote #: _____

Dimension A: _____ Dimension B: _____ ITEM CODE: _____

Conveyor Name/No. _____

Date: _____ Work done by: _____ Service Quote #: _____

Dimension A: _____ Dimension B: _____ ITEM CODE: _____

Conveyor Name/No. _____

Date: _____ Work done by: _____ Service Quote #: _____

Dimension A: _____ Dimension B: _____ ITEM CODE: _____

Conveyor Name/No. _____

Date: _____ Work done by: _____ Service Quote #: _____

Dimension A: _____ Dimension B: _____ ITEM CODE: _____

If you have any questions or problems reading measurement and selection of your Segmented Transfer Plate please contact Customer Service in the United States and Canada: 1-800-541-8028 or visit Flexco.com for more information.

Section 9 – STP Ordering Form

Structure Width
Dimension A: _____

Head Pulley Diameter (Belt & Lagging): _____

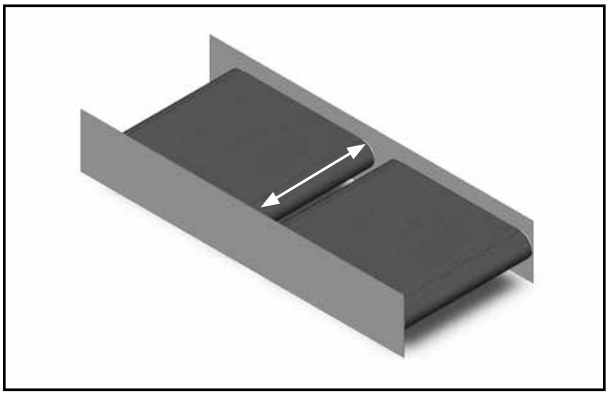

STP Width
Dimension of Gap to cover with transfer plate (Dimension B):

_____

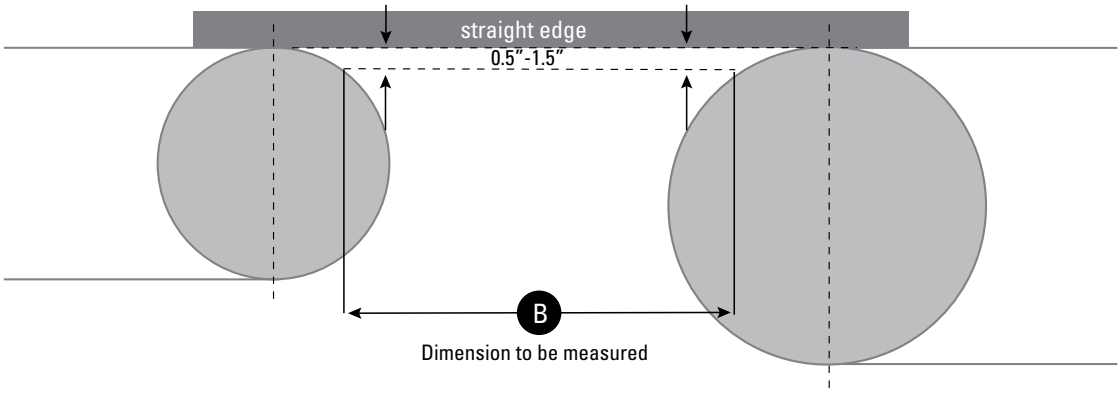

Item Code Selection

Conveyor width Dimension A	Transfer width - Dimension B									
	4″	5″	6″	6″ optional	7″	7″ optional	8″	8″ optional	9″	10″
	Item code	Item code	Item code	Item code	Item code	Item code	Item code	Item code	Item code	Item code
Between 4" to 26"	56100	56104	56108	56112	56116	56120	56128	56132	56140	56148
Between 26.1" to 38"	56101	56105	55609	56113	56117	56121	56129	56133	56141	55649
Between 38.1" to 44"	56181	56182	56183	56184	56185	56186	56187	56188	56189	56190
Between 44.1" to 50"	56102	56106	56110	56114	56118	56122	56130	56134	56142	56150
Between 50.1" to 60"	56102	56107	56111	56115	56119	56123	56131	56135	56143	56151

SEGMENTED TRANSFER PLATES REPLACEMENT PARTS

DESCRIPTION	ORDERING NUMBER	ITEM CODE
MOUNTING BRACKET	TG-MTG-BRKT RPL MNTG BRACKET	56600
SUPPORT BARS	TG-BAR-24/610 RPL BAR	56601
	TG-BAR-36/914 RPL BAR	56602
	TG-BAR-42/1067 RPL BAR	56618
	TG-BAR-48/1219 RPL BAR	56603
	TG-BAR-60/1524 RPL BAR	56604
END SEGMENTS	TGB-SEG-END-2 2 INCH END SEG	56606
	TGB-SEG-END-3 3 INCH END SEG	56607
	TGB-SEG-END-4 4 INCH END SEG	56608
	TGB-SEG-END-5 5 INCH END SEG	56609
CENTER SEGMENTS	TGB-SEG-CENTER-3 3 IN CTR SEG	56612
	TGB-SEG-CENTER-4 4 IN CTR SEG	56613
	TGB-SEG-CENTER-5 5 IN CTR SEG	56614
BRIDGE SEGMENT	TGB-BRIDGE SEG-CENTER	56628
	TGB-BRIDGE SEG-END	56629

2525 Wisconsin Avenue • Downers Grove, IL 60515-4200 • USA
Tel: (630) 971-0150 • Fax: (630) 971-1180 • E-mail: info@flexco.com

Visit **www.flexco.com** for other Flexco locations and products.

©2018 Flexible Steel Lacing Company. 03-20-19. For reorder: X4064