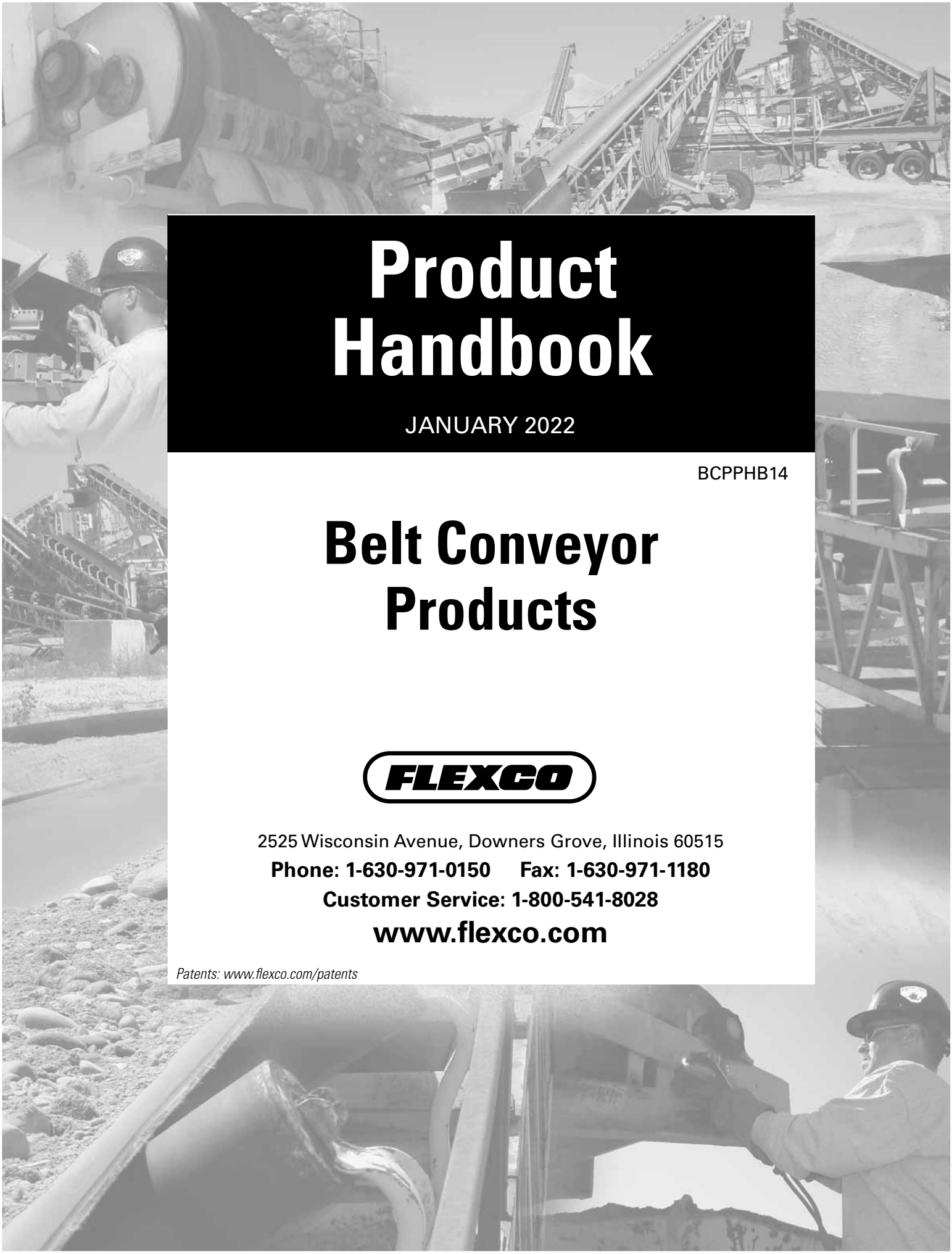

Product Handbook

JANUARY 2022

BCPPHB14

Belt Conveyor Products

FLEXCO

2525 Wisconsin Avenue, Downers Grove, Illinois 60515

Phone: 1-630-971-0150 Fax: 1-630-971-1180

Customer Service: 1-800-541-8028

www.flexco.com

Patents: www.flexco.com/patents

Pages 1 - 4 intentionally omitted.

Table of Contents

Belt Cleaners

Belt Cleaner Information and Selection Guide **6**

Precleaners

EZP1 Standard, Twist Tensioner and Hi-Temp Precleaners; ConShear™ Replacement Blades 11
EZP-LS Limited Space Precleaner 25
MSP Standard Mine-Duty Precleaner & ConShear™ Replacement Blades 34
MMP Medium Mine-Duty Precleaner & TuffShear™ Replacement Blades 41
MHP Heavy Mine-Duty Precleaner & MegaShear™ Replacement Blades 55
MHCP Heavy-Duty Cartridge Precleaner & SuperShear™ Replacement Blades 69
MXP Extreme-Duty Precleaner & UltraShear™ Replacement Blades 74
H-Type® Precleaners 78

Secondary Cleaners

EZS2 Secondary Cleaners 89
Y-Type™ Secondary Cleaners 93
P-Type® & P-Type LS (Limited Space) Secondary Cleaners 101
R-Type® Reversing Secondary Cleaners 105
FMS Secondary Cleaner 108
MHS HD Secondary Cleaners 113
P-Type® Secondary Cleaners with Enhanced Service Advantage™ Cartridge 123
R-Type® Secondary Cleaners with Enhanced Service Advantage™ Cartridge 127
MHS HD Secondary Cleaners with Enhanced Service Advantage™ Cartridge 131
MHS HD Secondary Cleaners with Service Advantage™ Cartridge – Legacy Replacement Parts 134
U-Type® Secondary Cleaners 135
MDWS DryWipe Secondary Cleaner 138
Motorized Brush Cleaner 142
Belt-Driven Brush Cleaner 145
Chevron Belt Cleaner 148
Continuous Blade Secondary Cleaner 149

Optional Mounting Kits and Accessories

Optional Mounting Kits 155
Spring Tensioner Accessories 156

Belt Cleaner Accessories

Inspection Door 157
Spray Pole Systems 159
Wash Box 160
Stabilizing Roller Bracket Kits 162
Live-Shaft Hold-down Rollers 163
Optional Installation Tools 164
Legacy Belt Cleaner Parts – H-Type® and I-Type™ 165

Replacement Blades for Other OEM Cleaners

ConShear™ Replacement Blades for Other OEM Cleaners **167**

Martin Engineering 169
Arch/Gordon 173
Superior Exterra® 175
ASGCO 176
Argonics 177
Stephens-Adamson Metso/Trellex 178
Martin Engineering Durt Hawg® 179
Martin Engineering Durt Tracker® 180

Belt Plows

V-Plows and Diagonal Plows 182

Impact Beds

Flexco Slider and Impact Beds **186**

EZSB-C & EZSB-I Slider Beds; EZIB-L & EZIB-M Impact Beds; Modular Impact Beds; Adjustable Idler Sets 187

DRX® Impact Beds **205**

DRX200, DRX750 and DRX1500 Impact Beds; DRX3000 Dynamic Bed 206
Optional Parts and Tools 214

Belt Positioners and Trainers

Belt Positioner™, PTEZ™, PT Smart™, and PT Max™ 215

Skirting Systems

Enclosed Skirting; Urethane Skirting; Skirt Clamps – RMC1, Flex-Lok™ and FlexSeal™; Skirt Wear Liner Kits 233

Belt Maintenance Tools

Flex-Lifter™, Flexco® Belt Cutters, and Far-Pul™ HD® Belt Clamps 245

Pulley Lagging

Flex-Lag® Rubber, Full Ceramic, Medium Ceramic, Adhesives, Weld-on™ Rubber, Weld-on™ Ceramic 247

Index 253

Belt Cleaner Information and Selection Guide

Why Are Belt Cleaners Needed?

- **Saves Money**
  Increases belt wear life.
  Extends life of rollers, pulleys and splices.
  High cost of accidents.

- **Reduces Maintenance Costs**
  Minimizes manual cleanup.
  Protects against belt mistracking.
  Reduces conveyor component replacement costs.
  Reducing carryback from 3% to 1% means a 67% reduction in maintenance costs.

- **Keeps Conveyors Running Efficiently and Consistently**
  Reduces unscheduled downtime.
  Increases production uptime.

- **Improves Safety**
  Reduces housekeeping problems.
  42% of conveyor-related accidents happen while maintenance tasks are being done.

Types of Belt Cleaners

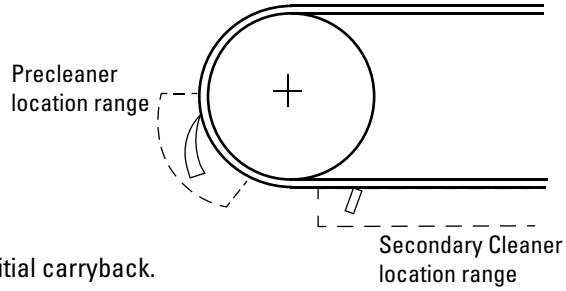

- **Precleaners**
  Mounted on the head pulley.
  Mounted below the material flow.
  Blade is always narrower than the belt width.
  Ideally, the blade covers just the belt's material path.
  Removes the big stuff. Typically cleans off up to 80% of the initial carryback.

- **Secondary Cleaners**
  Located just past where the belt leaves the head pulley and anywhere down the beltline.
  Special secondaries may allow for mounting under the head pulley.
  Blade width is always the belt width or wider.
  Removes sticky fines – the final cleaning job.
  Cleaning efficiencies can be 90% +.
  May require a hold-down roller for maximum performance.

- **Specialty Cleaners**
  Precleaners or Secondaries designed especially for specific or extreme applications.

Definition of Terms

- **Carryback** – Material that sticks to the belt after it leaves the transfer point and continues falling off along the conveyor's return side.

- **Material Path** – The section of the belt where most of the material is conveyed. Typically the center 2/3 of the belt.

- **Hold-Down Roller** – A stabilizing roller or pressure roller located on top of the return side of the belt to prevent belt flap or to provide a consistent flat surface for the blades on a lighter-tensioned belt.

Types of Cleaner Blades

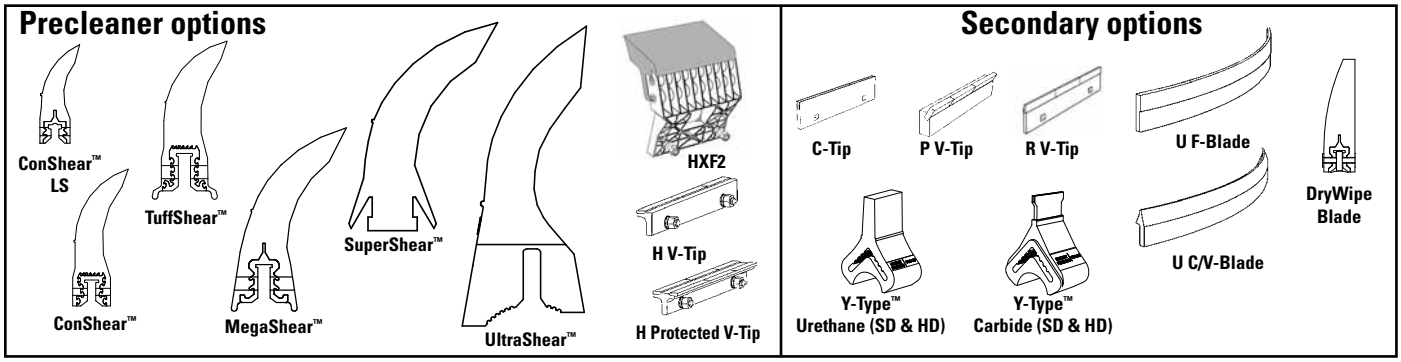

F-Tip/Blade - for mechanically fastened belts **V-Tip/Blade** - for vulcanized belts only **C-Tip/Blade** - for both

Polyurethane Blades

Not all polyurethanes are the same. Flexco's polyurethane blades are specially formulated for abrasion resistance and long wear. Independent testing has shown that Flexco's polyurethane blades last as much as 30% longer than other OEM blades.

- Easy on the belt.
- Work well with mechanical splices.
- Economical.
- Specialty formulations for high heat, chemical resistance, or water removal.

Less advanced polyurethane formulations result in blades that experience quicker wear and provide less efficient cleaning.

Tungsten Carbide

Excellent for superior cleaning efficiency and long wear. The quality and application of carbides can vary. Flexco has invested years of research and testing to develop tungsten carbide tips for both vulcanized and mechanically fastened belts. And a quality process ensures consistent results.

- Superior cleaning.
- Long wear.
- C-Tips/blades for mechanical splices and V-Tips/blades for vulcanized belts.

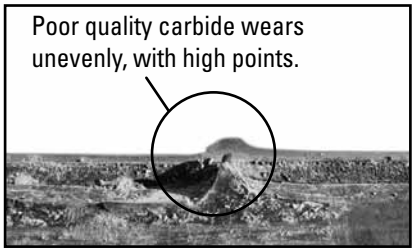

The "Material Path" Option (for Precleaners)

For optimal cleaning and reduced blade retensioning, the cleaner blade width should be sized to fit the material path of the belt. The material path is typically the center 2/3 of the belt width. Choosing a blade only slightly wider than the material path can decrease differential blade wear which reduces blade retensioning maintenance, as well as reducing the frequency of blade replacement.

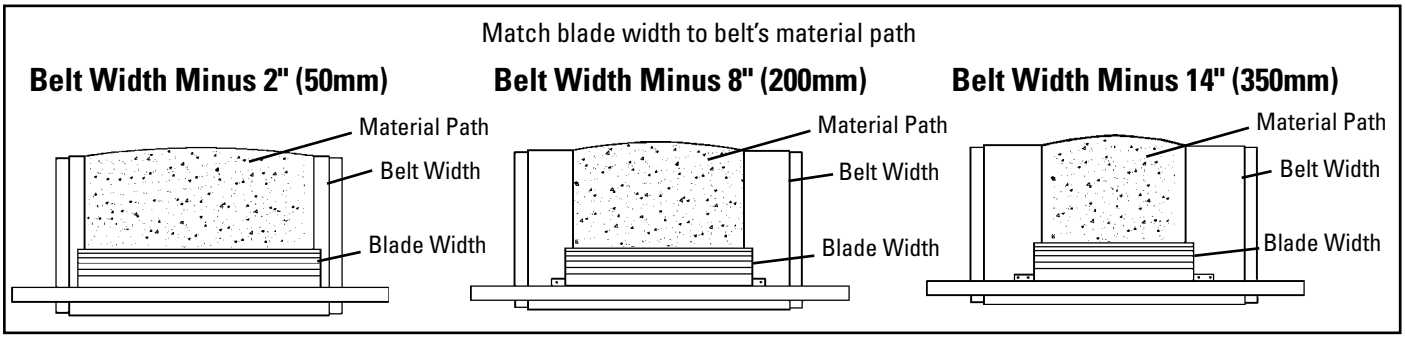

Blade Angle (Secondary Cleaners)

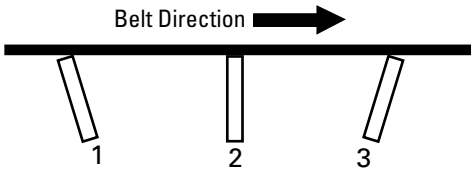

1. **Aggressive** – excellent cleanability, high risk for belt damage.
2. **90º to belt** – good cleaning efficiency; must have good blade relief for splices.
3. **Wiping** – a little less cleaning power; safer on belts in poor condition or with poor mechanical splices.

Belt Cleaning Systems

Many applications will require more than one belt cleaner to do a satisfactory cleaning job. A typical system includes a precleaner (to knock off the initial flow of carryback), one or more secondary cleaners (to take off the sticky fines) and many times, a final specialty cleaner (to remove the water).

Keys to Good Belt Cleaning

- **Proper cleaner selection for the application**
- **Correct installation**
- **Regular service maintenance**

Spec'ing and Ordering Belt Cleaners

Information needed:

A. Belt width
B. Conveyor frame (structure) width
C. Head pulley diameter
D. For precleaners – what is the belt's material path
E. Material conveyed (dry, wet, sticky, etc.)
F. Type of belt splice:
   Mechanical – skived or unskived
   Vulcanized
G. Temperature or other extreme environmental factors
H. Does the belt reverse

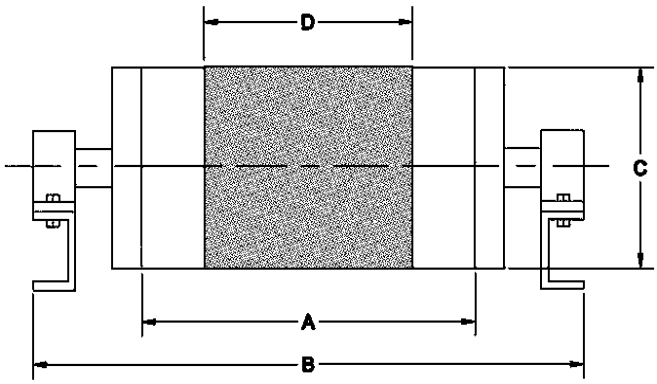

Precleaner Selection Guide

PRECLEANER SPECIFICATION CHART

Application Description	EZP-LS	EZP1	MSP	MMP	MHP	MHCP	MXP
Belt Width*	12" - 60" (300 - 1500mm)	12" - 72" (300 - 1800mm)	24" - 84" (600 - 2100mm)	24" - 96" (600 - 2400mm)	24"-96" (600 - 2400mm)	24" - 96" (600 - 2400mm)	42" - 120" (1050 - 3000mm)
Belt Speed	500fpm (2.5M/sec)	700fpm (3.5M/sec)	700fpm (3.5M/sec)	1000fpm (5M/sec)	1500fpm (7.5M/sec)	1200fpm (6M/sec)	2000fpm (10M/sec)
Head Pulley Diameter	6" - 22" (150 - 550mm)	10" - 36" (250 - 900mm)	16" - 42" (400 - 1050mm)	16" - 48" (400 - 1200mm)	20" - 84" (500 - 2100mm)	20" - 84" (500 - 2100mm)	48" - 96" (1200 - 2400mm)
Reversing Belts	Yes	Yes	Yes	Yes	Yes	Yes	Yes
Mechanical Fasteners	Yes	Yes	Yes	Yes	Yes	Yes	Yes

PRECLEANER SPECIFICATION CHART (cont.)

Application Description	H-Type® (XF2- & XF-Tips)	H-Type® (V-Tips)	High Temp (V-Tips)	HV2 (V-Tips)
Belt Width*	18" - 72" (450 - 1800mm)	18" - 72" (450 - 1800mm)	18" - 48" (450 - 1200mm)	18" - 72" (450 - 1800mm)
Belt Speed	1000fpm (5M/sec)	1500fpm (7.5M/sec)	1000fpm (5M/sec)	1500fpm (7.5M/sec)
Head Pulley Diameter	10" - 47" (250 - 1175mm)	10" - 67" (250 - 1675mm)	8" - 35" (200 - 875mm)	10" - 67" (250 - 1675mm)
Reversing Belts	Yes	Yes	Yes	Yes
Mechanical Fasteners	Yes	No	No	No

*Special sizes available upon request.

PRECLEANER BLADE SPECIFICATIONS

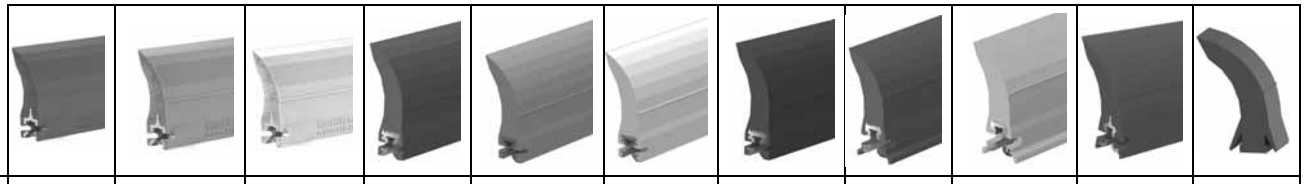

Blade Type	ConShear™ LS	ConShear™ LS High Temp	ConShear™ LS White (Chemical Resistant/Food Grade) ‡	ConShear™	ConShear High Temp	ConShear™ White (Chemical Resistant/ Food Grade) ‡	ConShear Ultra High Temp	TuffShear™	TuffShear™ High Temp	Mega-Shear™	Super-Shear™
Belt Speed	500fpm (2.5M/sec)	500fpm (2.5M/sec)	500fpm (2.5M/sec)	700fpm (3.5M/sec)	700fpm (3.5M/sec)	700fpm (3.5M/sec)	700fpm (3.5M/sec)	1000fpm (5M/sec)	1000fpm (5M/sec)	1500fpm (7.5M/sec)	1200fpm (6M/sec)
Temperature Range	-30 to 180°F (-35 to 82°C)	up to 275°F (135°C) with spikes to 325°F (163°C)	-30 to 180°F (-35 to 82°C)	-30 to 180°F (-35 to 82°C)	up to 275°F (135°C) with spikes to 325°F (163°C)	-30 to 180°F (-35 to 82°C)	up to 400°F (200°C) with spikes to 450°F (232°C)	-30 to 180°F (-35 to 82°C)	up to 275°F (135°C) with spikes to 325°F (163°C)	-30 to 180°F (-35 to 82°C)	-30 to 180°F (-35 to 82°C)
Polyurethane	Yes	Yes	Yes	Yes	Yes	Yes	Yes	Yes	Yes	Yes	Yes
Durometer	83	93	83	83	93	83	90	83	93	83	93
Tungsten Carbide	No	No	No	No	No	No	No	No	No	No	No
Work with Mechanical Fasteners	Yes	Yes	Yes	Yes	Yes	Yes	Yes	Yes	Yes	Yes	Yes

‡ All ingredients used in the polyurethane formulation of this blade comply with the relevant requirements of 21 CFR (FDA Code of Federal Regulations) for use in repeated bulk dry food applications

PRECLEANER BLADE SPECIFICATIONS

Blade Type	UltraShear™	HXF	HXF2	H V-Tip	H Protected V-Tip	HV2 Tip	Protected HV2 Tip
Belt Speed	2000fpm (10M/sec)	700fpm (3.5M/sec)	700fpm (3.5M/sec)	1000fpm (5M/sec)	1000fpm (5M/sec)	1500fpm (7.5M/sec)	1500fpm (7.5M/sec)
Temperature Range	-30 to 275°F (-35 to 135°C)	-30 to 180°F (-35 to 82°C)	-30 to 180°F (-35 to 82°C)	-30 to 400°F (-35 to 205°C)	-30 to 400°F (-35 to 205°C)	-30 to 400°F (-35 to 205°C)	-30 to 400°F (-35 to 205°C)
Polyurethane	Yes	Yes	Yes	No	No	No	No
Durometer	93	84	83	N/A	N/A	N/A	N/A
Tungsten Carbide	No	No	No	Yes	Yes	Yes	Yes
Work with Mechanical Fasteners	Yes	Yes	Yes	No	No	No	No

Secondary Cleaner Selection Guide

SECONDARY CLEANER SPECIFICATION CHART

Application Description	Y-Type SD Polyurethane	Y-Type SD Carbide	Y-Type HD Polyurethane	Y-Type HD Carbide	EZS2	EZS2 High Temp	FMS (C-Tip)	FMS (V-Tip)	MHS (C-Tip)	MHS (V-Tip)
Belt Width*	18" - 48" 450 - 1200mm	18" - 48" 450 - 1200mm	36" - 72" 900 - 1800mm	36" - 72" 900 - 1800mm	18" - 72" 450 - 1800mm	18" - 72" 450 - 1800mm	18" - 84" 450 - 2100mm	18" - 84" 450 - 2100mm	18" - 96" 450 - 2400mm	18" - 96" 450 - 2400mm
Belt Speed	600fpm (3M/sec)	600fpm (3M/sec)	750fpm (3.8M/sec)	750fpm (3.8M/sec)	700fpm (3.5M/sec)	700fpm (3.5M/sec)	1200fpm (6M/sec)	1200fpm (6M/sec)	1200fpm (6M/sec)	1500fpm (7.5M/sec)
Reversing Belts	Yes	Yes	Yes	Yes	No	No	No	No	Yes	Yes
Works with Mechanical Fasteners	Yes	Yes	Yes	Yes	Yes	Yes	Yes	No	Yes	No

*Special sizes available upon request.

SECONDARY CLEANER SPECIFICATION CHART (cont.)

Application Description	MDWS	P-Type® (C-Tip)	P-Type (V-Tip)	U-Type® (F-Blade)	U-Type (C-Blade)	U-Type (V-Blade)	R-Type® (C-Tip)	R-Type (V-Tip)	Chevron	Brush Cleaner
Belt Width*	18" - 72" 450 - 1800mm	18" - 72" 450 - 1800mm	18" - 72" 450 - 1800mm	18" - 84" 450 - 2100mm	18" - 84" 450 - 2100mm	18" - 84" 450 - 2100mm	18" - 72" 450 - 1800mm	18" - 72" 450 - 1800mm	18" - 84" 450 - 2100mm	18" - 84" 450 - 2100mm
Belt Speed	1600fpm (6M/sec)	1000fpm (5M/sec)	1200fpm (6M/sec)	1000fpm (5M/sec)	1300fpm (6.6M/sec)	1300fpm (6.6M/sec)	1000fpm (5M/sec)	1000fpm (5M/sec)	500fpm (2.5M/sec)	700fpm (3.5M/sec)
Reversing Belts	Yes	No	No	No	No	No	Yes	Yes	Yes	No
Works with Mechanical Fasteners	Yes	Yes	No	Yes	Yes	No	Yes	No	Yes	Yes

*Special sizes available upon request.

SECONDARY CLEANER BLADE SPECIFICATIONS

Blade Type	C-Tip	P V-Tip	R V-Tip	Y-Type Polyurethane (Purple)	Y-Type Polyurethane (White)	Y-Type Carbide	DryWipe Blade	U F-Blade	U C-Blade	U V-Blade	Chevron	Brush Cleaner
Temperature Range	-30 to 400°F -35 to 205°C	-30 to 400°F -35 to 205°C	-30 to 400°F -35 to 205°C	-30 to 180°F -35 to 82°C	-30 to 180°F -35 to 82°C	-30 to 180°F -35 to 82°C	-30 to 180°F -35 to 82°C	-30 to 180°F -35 to 82°C	-30 to 180°F -35 to 82°C	-30 to 180°F -35 to 82°C	-30 to 180°F -35 to 82°C	-20 to 180°F -30 to 82°C
Polyurethane	No	No	No	Yes	Yes	No	Yes	Yes	Rubber	Rubber	Rubber	Poly-propylene
Durometer	N/A	N/A	N/A	86A	83A	N/A	59	90	84	83	N/A	N/A
Tungsten Carbide	Yes	Yes	Yes	No	No	Yes	No	No	Yes	Yes	No	No
Works with Mechanical Fasteners	Yes	No	No	Yes	Yes	Yes	Yes	Yes	Yes	No	Yes	Yes

Product Ordering Information

EZP1 Precleaner
Belt Width Minus 2" (50mm)

BELT WIDTH		BLADE WIDTH		ORDERING NUMBER	ITEM CODE	WT. LBS.
in.	mm	in.	mm			
12	300	10	250	EZP1-212	75610	49.4
18	450	16	400	EZP1-218	75611	55.3
24	600	22	550	EZP1-224	75612	61.2
30	750	28	700	EZP1-230	75613	67.1
36	900	34	850	EZP1-236	75614	73.0
42	1050	40	1000	EZP1-242	75615	78.9
48	1200	46	1150	EZP1-248	75616	84.8
54	1350	52	1300	EZP1-254	75617	90.7
60	1500	58	1450	EZP1-260	75618	96.6
72	1800	70	1750	EZP1-272	75771	102.5

Lead time: 1 working day

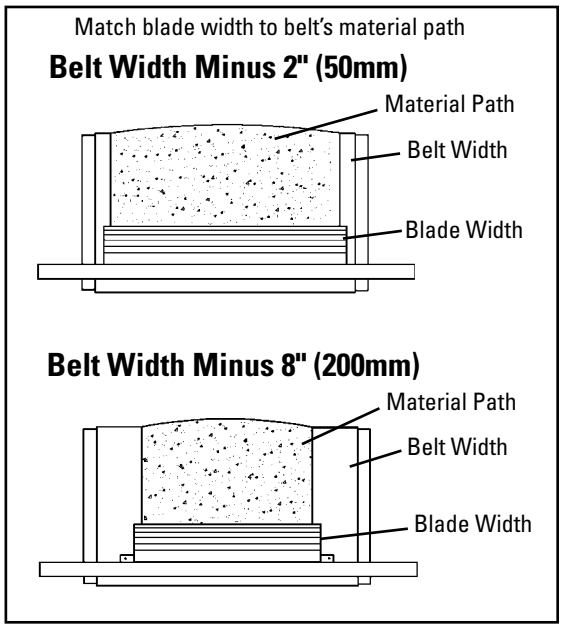

EZP1 Precleaner
Belt Width Minus 8" (200mm)

BELT WIDTH		BLADE WIDTH		ORDERING NUMBER	ITEM CODE	WT. LBS.
in.	mm	in.	mm			
12	300	–	–	N/A	N/A	–
18	450	10	250	EZP1-818	75779	51.3
24	600	16	400	EZP1-824	75780	57.2
30	750	22	550	EZP1-830	75781	63.1
36	900	28	700	EZP1-836	75782	69.0
42	1050	34	850	EZP1-842	75783	74.9
48	1200	40	1000	EZP1-848	75784	80.8
54	1350	46	1150	EZP1-854	75785	86.7
60	1500	52	1300	EZP1-860	75786	92.6
72	1800	64	1600	EZP1-872	75774	98.5

Lead time: 1 working day

Product Notes:

- For optimal cleaning and reduced blade retensioning maintenance, the cleaner blade width should be sized to fit the material path of the belt. The material path is typically 2/3 of the belt width. In most cases a blade size of belt width minus 8" (200mm) may be the best selection.
- Each cleaner can be retrofitted with three replacement blade sizes (belt width minus 2" (50mm), minus 8" (200mm), or minus 14" (350mm)).
- Comes complete with universal mounting plates and tensioner.
- Visual tension check. No guesswork on blade tensioning. Simply measure the spring, check label on tensioner and turn adjusting nut to restore optimal tension.
- Works with mechanical splices. Polyurethane blade glides over splices.
- Compatible with reversing belts.
- For replacement parts see the EZP1 Parts List on 19.
- For applications requiring longer pole lengths, go to the minus 8" (200mm) chart and select the cleaner one belt width size larger. This will provide a pole 6" (150mm) longer and a blade size of belt width minus 2" (50mm).

Product Ordering Information

EZP1T Precleaner with Twist Tensioner Belt Width Minus 2" (50mm)

BELT WIDTH		BLADE WIDTH		ORDERING NUMBER	ITEM CODE	WT. LBS.
in.	mm	in.	mm			
12	300	10	250	EZP1T-212	78488	38.5
18	450	16	400	EZP1T-218	78489	44.5
24	600	22	550	EZP1T-224	78490	50.5
30	750	28	700	EZP1T-230	78491	56.5
36	900	34	850	EZP1T-236	78492	62.5
42	1050	40	1000	EZP1T-242	78493	68.4
48	1200	46	1150	EZP1T-248	78494	74.4
54	1350	52	1300	EZP1T-254	78495	83.7
60	1500	58	1450	EZP1T-260	78496	92.0
72	1800	70	1750	EZP1T-272	78497	101.6

Lead time: 1 working day

EZP1T Precleaner with Twist Tensioner Belt Width Minus 8" (200mm)

BELT WIDTH		BLADE WIDTH		ORDERING NUMBER	ITEM CODE	WT. LBS.
in.	mm	in.	mm			
12	300	–	–	N/A	N/A	–
18	450	10	250	EZP1T-818	78498	41.8
24	600	16	400	EZP1T-824	78499	47.8
30	750	22	550	EZP1T-830	78500	53.8
36	900	28	700	EZP1T-836	78501	59.8
42	1050	34	850	EZP1T-842	78502	65.8
48	1200	40	1000	EZP1T-848	78503	71.7
54	1350	46	1150	EZP1T-854	78504	78.5
60	1500	52	1300	EZP1T-860	78505	87.0
72	1800	64	1600	EZP1T-872	78506	98.9

Lead time: 1 working day

Match blade width to belt's material path

Belt Width Minus 2" (50mm)

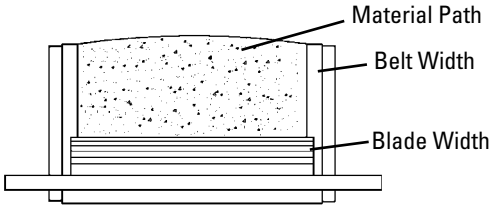

Belt Width Minus 8" (200mm)

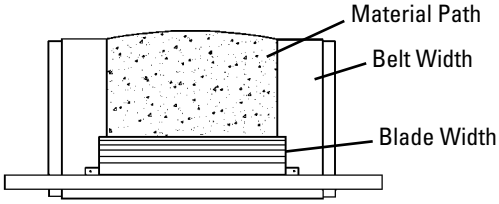

Product Notes:

- For optimal cleaning and reduced blade retensioning maintenance, the cleaner blade width should be sized to fit the material path of the belt. The material path is typically 2/3 of the belt width. In most cases a blade size of belt width minus 8" (200mm) may be the best selection.
- Each cleaner can be retrofitted with three replacement blade sizes (belt width minus 2" (50mm), minus 8" (200mm), or minus 14" (350mm)).
- Comes complete with universal mounting plates and tensioner.
- Visual tension check. No guesswork on blade tensioning. Simply measure the spring, check label on tensioner and turn adjusting nut to restore optimal tension.
- Works with mechanical splices. Polyurethane blade glides over splices.
- Compatible with reversing belts.
- For replacement parts see the EZP1T Parts List on 20.
- For applications requiring longer pole lengths, go to the minus 8" (200mm) chart and select the cleaner one belt width size larger. This will provide a pole 6" (150mm) longer and a blade size of belt width minus 2" (50mm).

Product Ordering Information

ConShear™ High Temp Precleaners
Belt Width Minus 2" (50mm)

BELT WIDTH		BLADE WIDTH		ORDERING NUMBER	ITEM CODE	WT. LBS.
in.	mm	in.	mm			
12	300	10	250	HTF212	76658	49.4
18	450	16	400	HTF218	76659	55.3
24	600	22	550	HTF224	76660	61.2
30	750	28	700	HTF230	76661	67.1
36	900	34	850	HTF236	76662	73.0
42	1050	40	1000	HTF242	76663	78.9
48	1200	46	1150	HTF248	76664	84.8
54	1350	52	1300	HTF254	76665	90.7
60	1500	58	1450	HTF260	76666	96.6
72	1800	70	1750	HTF272	76667	102.5

Pole Diameter - 2-3/8" (60mm)
Lead time: 1 working day

Match blade width to belt's material path

Belt Width Minus 2" (50mm)

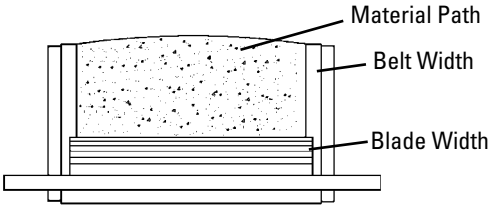

Product Notes:

- The High-Temp ConShear Precleaner works in temperatures up to 275°F (135°C) with spikes to 325°F (164°C).
- Comes complete with universal mounting plates and tensioner.
- Visual tension check. No guesswork on blade tensioning. Simply measure the spring, check label on tensioner and turn adjusting nut to restore optimal tension.
- Works with mechanical splices. Polyurethane blade glides over splices.
- For replacement parts see the EZP1 Parts List on 19.
- Compatible with reversing belts.

Product Ordering Information

EZP1 Ultra High-Temp Precleaner Belt Width Minus 2" (50mm)

BELT WIDTH		BLADE WIDTH		ORDERING NUMBER	ITEM CODE	WT. LBS.
in.	mm	in.	mm			
12	300	10	250	EZP1-UHT212	91226	49.4
18	450	16	400	EZP1-UHT218	91227	55.3
24	600	22	550	EZP1-UHT224	91228	61.2
30	750	28	700	EZP1-UHT230	91229	67.1
36	900	34	850	EZP1-UHT236	91230	73.0
42	1050	40	1000	EZP1-UHT242	91231	78.9
48	1200	46	1150	EZP1-UHT248	91232	84.8
54	1350	52	1300	EZP1-UHT254	91233	90.7
60	1500	58	1450	EZP1-UHT260	91234	96.6
72	1800	70	1750	EZP1-UHT272	91235	102.5

Lead time: 1 working day

EZP1 Ultra High-Temp Precleaner Belt Width Minus 8" (200mm)

BELT WIDTH		BLADE WIDTH		ORDERING NUMBER	ITEM CODE	WT. LBS.
in.	mm	in.	mm			
18	450	10	250	EZP1-UHT818	91236	51.3
24	600	16	400	EZP1-UHT824	91237	57.2
30	750	22	550	EZP1-UHT830	91238	63.1
36	900	28	700	EZP1-UHT836	91239	69.0
42	1050	34	850	EZP1-UHT842	91240	74.9
48	1200	40	1000	EZP1-UHT848	91241	80.8
54	1350	46	1150	EZP1-UHT854	91242	86.7
60	1500	52	1300	EZP1-UHT860	91243	92.6
72	1800	64	1600	EZP1-UHT872	91244	98.5

Lead time: 1 working day

EZP1 Ultra High-Temp Precleaner Belt Width Minus 14" (350mm)

BELT WIDTH		BLADE WIDTH		ORDERING NUMBER	ITEM CODE	WT. LBS.
in.	mm	in.	mm			
24	600	10	250	EZP1-UHT1424	91245	53.2
30	750	16	400	EZP1-UHT1430	91246	59.1
36	900	22	550	EZP1-UHT1436	91247	65.0
42	1050	28	700	EZP1-UHT1442	91248	70.9
48	1200	34	850	EZP1-UHT1448	91249	76.8
54	1350	40	1000	EZP1-UHT1454	91250	82.7
60	1500	46	1150	EZP1-UHT1460	91251	88.6
72	1800	58	1450	EZP1-UHT1472	91252	94.5

Lead time: 1 working day

Match blade width to belt's material path

Belt Width Minus 2" (50mm)

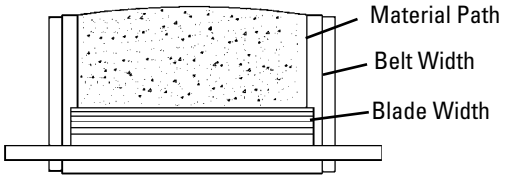

Belt Width Minus 8" (200mm)

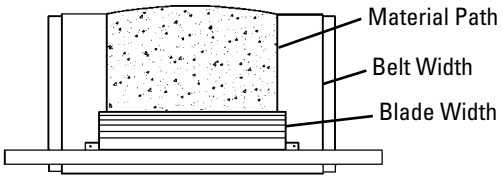

Belt Width Minus 14" (350mm)

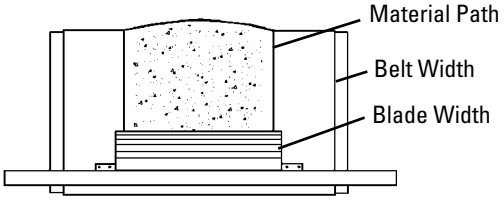

Product Notes:

- For optimal cleaning and reduced blade retensioning maintenance, the cleaner blade width should be sized to fit the material path of the belt. The material path is typically 2/3 of the belt width. In most cases a blade size of belt width minus 8" (200mm) may be the best selection.
- Each cleaner can be retrofitted with three replacement blade sizes (belt width minus 2" (50mm), minus 8" (200mm), or minus 14" (350mm)).
- Comes complete with universal mounting plates and tensioner.
- Visual tension check. No guesswork on blade tensioning. Simply measure the spring, check label on tensioner and turn adjusting nut to restore optimal tension.
- Works with mechanical splices. Polyurethane blade glides over splices.
- Compatible with reversing belts.

Product Ordering Information

EZP1
Precleaner with White ConShear™ Blade

EZP1 Precleaner - Mild Steel with White ConShear™ Blade Belt Width Minus 2" (50mm)

BELT WIDTH		BLADE WIDTH		ORDERING NUMBER	ITEM CODE	WT. LBS.
in.	mm	in.	mm			
12	300	10	250	EZP1-212W	78934	49.4
18	450	16	400	EZP1-218W	78935	55.3
24	600	22	550	EZP1-224W	78936	61.2
30	750	28	700	EZP1-230W	78937	67.1
36	900	34	850	EZP1-236W	78938	73.0
42	1050	40	1000	EZP1-242W	78939	78.9
48	1200	46	1150	EZP1-248W	78940	84.8
54	1350	52	1300	EZP1-254W	78941	90.7
60	1500	58	1450	EZP1-260W	78942	96.6
72	1800	70	1750	EZP1-272W	78943	99.4

Lead time: 1 working day

Belt Width Minus 2" (50mm)

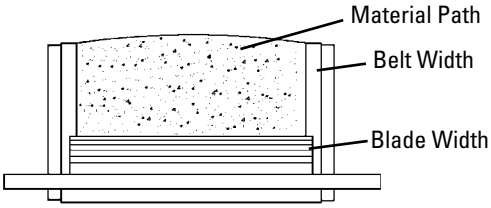

Product Notes:

- All ingredients used in polyurethane formulation comply with the relevant requirements of 21 CFR (FDA Code of Federal Regulations) for use in repeated bulk dry food applications.
- Comes complete with universal mounting plates and tensioner.
- Visual tension check. No guesswork on blade tensioning. Simply measure the spring, check label on tensioner and turn adjusting nut to restore optimal tension.
- Works with mechanical splices. Polyurethane blade glides over splices.
- For replacement parts see the EZP1 Parts List on 19.
- Compatible with reversing belts.

ConShear™ Replacement Blades

Replacement ConShear™ Blades

BLADE WIDTH		ORDERING NUMBER	ITEM CODE	WT. LBS.
in.	mm			
10	250	CRB10	75628	4.6
16	400	CRB16	75629	7.3
22	550	CRB22	75630	10.1
28	700	CRB28	75631	12.8
34	850	CRB34	75632	15.5
40	1000	CRB40	75633	18.3
46	1150	CRB46	75634	21.0
52	1300	CRB52	75635	23.8
58	1450	CRB58	75636	26.5
64	1600	CRB64	75775	29.2
70	1750	CRB70	75773	32.0
76	1900	CRB76	76940	34.7
82	2050	CRB82	76941	37.5

Other blade sizes available upon request.
Lead time: 1 working day

Replacement White ConShear™ Blades (Chemical Resistant/Food Grade) ‡

BLADE WIDTH		ORDERING NUMBER	ITEM CODE	WT. LBS.
in.	mm			
10	250	CRB-W10	78471	4.8
16	400	CRB-W16	78472	7.6
22	550	CRB-W22	78473	10.4
28	700	CRB-W28	78474	13.2
34	850	CRB-W34	78475	16.2
40	1000	CRB-W40	78476	19.1
46	1150	CRB-W46	78477	21.9
52	1300	CRB-W52	78478	24.8
58	1450	CRB-W58	78479	27.6

Lead time: 1 working day
‡ All ingredients used in the polyurethane formulation of this blade comply with the relevant requirements of 21 CFR (FDA Code of Federal Regulations) for use in repeated bulk dry food applications

Replacement High Temp ConShear™ Blades

(Color Identification: Yellow)

BLADE WIDTH		ORDERING NUMBER	ITEM CODE	WT. LBS.
in.	mm			
10	250	CRB-HT10	76593	4.8
16	400	CRB-HT16	76594	7.6
22	550	CRB-HT22	76595	10.4
28	700	CRB-HT28	76596	13.2
34	850	CRB-HT34	76597	16.2
40	1000	CRB-HT40	76598	19.1
46	1150	CRB-HT46	76599	21.9
52	1300	CRB-HT52	76600	24.8
58	1450	CRB-HT58	76601	27.6
64	1600	CRB-HT64	76602	30.5
70	1750	CRB-HT70	76603	33.4

Lead time: 1 working day

Replacement Ultra High-Temp ConShear™ Blades

(Color Identification: Red)

BLADE WIDTH		ORDERING NUMBER	ITEM CODE	WT. LBS.
in.	mm			
10	250	CRB-UHT10	91253	4.6
16	400	CRB-UHT16	91254	7.3
22	550	CRB-UHT22	91255	10.1
28	700	CRB-UHT28	91256	12.8
34	850	CRB-UHT34	91257	15.5
40	1000	CRB-UHT40	91258	18.3
46	1150	CRB-UHT46	91259	21.0
52	1300	CRB-UHT52	91260	23.8
58	1450	CRB-UHT58	91261	26.5
64	1600	CRB-UHT64	91262	29.2
70	1750	CRB-UHT70	91263	32.0

Lead time: 1 working day

Blade Width Selection

BELT WIDTH		BELT WIDTH - 2" (50mm)		BELT WIDTH - 8" (200mm)		BELT WIDTH - 14" (350mm)	
in.	mm	in.	mm	in.	mm	in.	mm
12	300	10	250	N/A	N/A	N/A	N/A
18	450	16	400	10	250	N/A	N/A
24	600	22	550	16	400	10	250
30	750	28	700	22	550	16	400
36	900	34	850	28	700	22	550
42	1050	40	1000	34	850	28	700
48	1200	46	1150	40	1000	34	850
54	1350	52	1300	46	1150	40	1000
60	1500	58	1450	52	1300	46	1150
72	1800	70	1600	64	1600	58	1450

Product Notes:

- Take blade width and ordering number from the worn blade and use the Replacement Blade Chart.
- For optimal cleaning and reduced blade retensioning maintenance, the cleaner blade width should be sized to fit the material path of the belt. The material path is typically 2/3 of the belt width. In most cases a blade size of belt width minus 8" (200mm) may be the best selection.
- The ConShear™ blade has a faceted profile that renews the cleaning edge as it wears.
- Visual tension check. No guesswork on blade tensioning. Simply measure the spring, check label on tensioner and turn adjusting nut to restore optimal tension.
- ConShear blades are made of a special long-wearing polyurethane.
- A molded-in blade wear line indicates when the blade is worn out and needs to be replaced.
- Blade replacement is quick. Pull one pin, remove the old blade and slide the new one in.

Pole Length Specifications

CLEANER SIZE		POLE LENGTH		MAXIMUM CONVEYOR SPAN	
in.	mm	in.	mm	in.	mm
12	300	42	1050	37	925
18	450	48	1200	43	1075
24	600	54	1350	49	1225
30	750	60	1500	55	1375
36	900	66	1650	61	1525
42	1050	72	1800	67	1675
48	1200	78	1950	73	1825
54	1350	88	2200	83	2075
60	1500	94	2350	89	2225
72	1800	106	2650	101	2525

Pole Diameter – 2-3/8" (60mm)

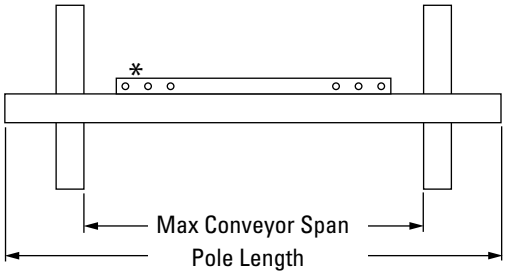

*Each pole size can be used with a blade size either belt width minus 2" (50mm), belt width minus 8" (200mm), or belt width minus 14" (350mm).

Clearance Guidelines for Installation

HORIZONTAL CLEARANCE REQUIRED		VERTICAL CLEARANCE REQUIRED	
in.	mm	in.	mm
4	100	9 1/2	238

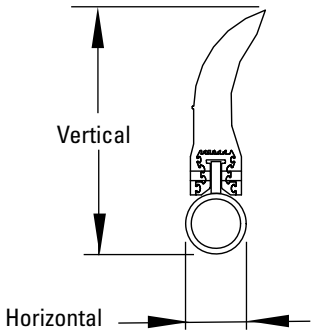

Spring Length Chart

with EST Spring Tensioner

BLADE WIDTH		PURPLE SPRING		SILVER SPRING		BLACK SPRING	
in.	mm	in.	mm	in.	mm	in.	mm
10	250	5 3/4	146	6 1/4	159	N/A	N/A
16	400	5 1/4	133	6	152	N/A	N/A
22	550	4 3/4	121	5 7/8	149	N/A	N/A
28	700	4 1/4	108	5 5/8	143	N/A	N/A
34	850	N/A	N/A	5 3/8	137	5 5/8	143
40	1000	N/A	N/A	5 1/8	130	5 1/2	140
46	1150	N/A	N/A	5	127	5 1/4	133
52	1300	N/A	N/A	4 3/4	121	5 1/8	130
58	1450	N/A	N/A	N/A	N/A	5	127
64	1600	N/A	N/A	N/A	N/A	4 3/4	121
70	1750	N/A	N/A	N/A	N/A	4 5/8	117

Shading indicates preferred spring option

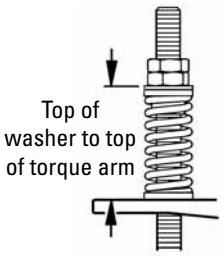

Twist Tensioner Chart

BLADE WIDTH		STANDARD	HEAVY DUTY
in.	mm		
10"	250	8	6
16"	400	13	9
22"	550	18	12
28"	700	23	16
34"	850	27	19
40"	1000	32	23
46"	1150	37	26
52"	1300	N/A	29
58"	1450	N/A	33
64"	1600	N/A	36
70"	1750	N/A	40

Pole Location Chart IMPERIAL

A	X	Y	C
10	3	9	9 1/2
11	3 3/4	9	9 3/4
12	4 3/8	9	10
13	5 3/8	9	10 1/2
14	5 7/8	9	10 3/4
15	6 3/8	9	11 1/4
16	7 1/8	9	11 1/2
17	7 7/8	9	12
18	8 1/4	9	12 1/4
19	9	9	12 3/4
20	9 3/8	9	13
21	10	9	13 1/2
22	10 3/4	9	14
23	11 3/8	9	14 1/2
24	12	9	15
25	12 5/8	9	15 1/2
26	13 1/4	9	16
27	13 7/8	9	16 1/2
28	14 3/8	9	17
29	15	9	17 1/2
30	15 5/8	9	18
31	16 1/8	9	18 1/2
32	16 3/4	9	19
33	17 1/4	9	19 1/2
34	17 7/8	9	20
35	18 3/8	9	20 1/2
36	19	9	21

Pole Location Chart METRIC

A	X	Y	C
250	74	230	242
275	92	230	248
300	108	230	254
325	131	230	265
350	146	230	273
375	166	230	284
400	179	230	291
425	195	230	301
450	207	230	309
475	223	230	320
500	235	230	329
525	249	230	339
550	266	230	352
575	283	230	365
600	299	230	377
625	314	230	390
650	330	230	402
675	346	230	415
700	360	230	427
725	374	230	439
750	389	230	452
775	403	230	464
800	417	230	477
825	432	230	489
850	446	230	501
875	460	230	514
900	474	230	526

Pole Location Specs

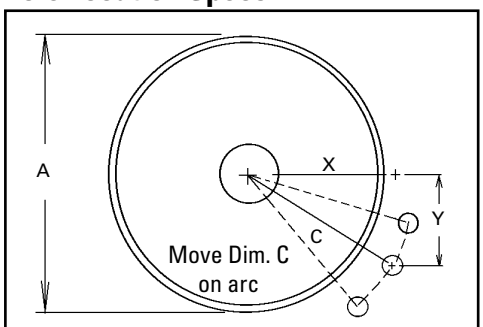

A = Pulley Diameter + Lagging and Belt
C = Critical Spec to move location if necessary

Specifications:

- Maximum Belt Speed ..... 700 FPM (3.5M/sec)
- Temperature Rating (ConShear, ConShear White) ..... -30°F to 180°F (-35°C to 82°C)
- Temperature Rating (ConShear High Temp) ..... Up to 275°F (135°C) with spikes to 325°F (164°C)
- Temperature Rating (ConShear Ultra High-Temp) ..... Up to 400°F (200°C) with spikes to 450°F (232°C)
- Minimum Pulley Diameter ..... 10" (250mm)
- Blade Height ..... 7-1/4" (185mm)
- Usable Blade Wear Length ..... 4" (100mm)
- Blade Material ..... Polyurethane (proprietary blend for abrasion resistance and long wear)
- Available for Belt Widths ..... 12" to 72" (300 to 1800mm)
- CEMA Cleaner Rating ..... Class 2

Replacement Parts List

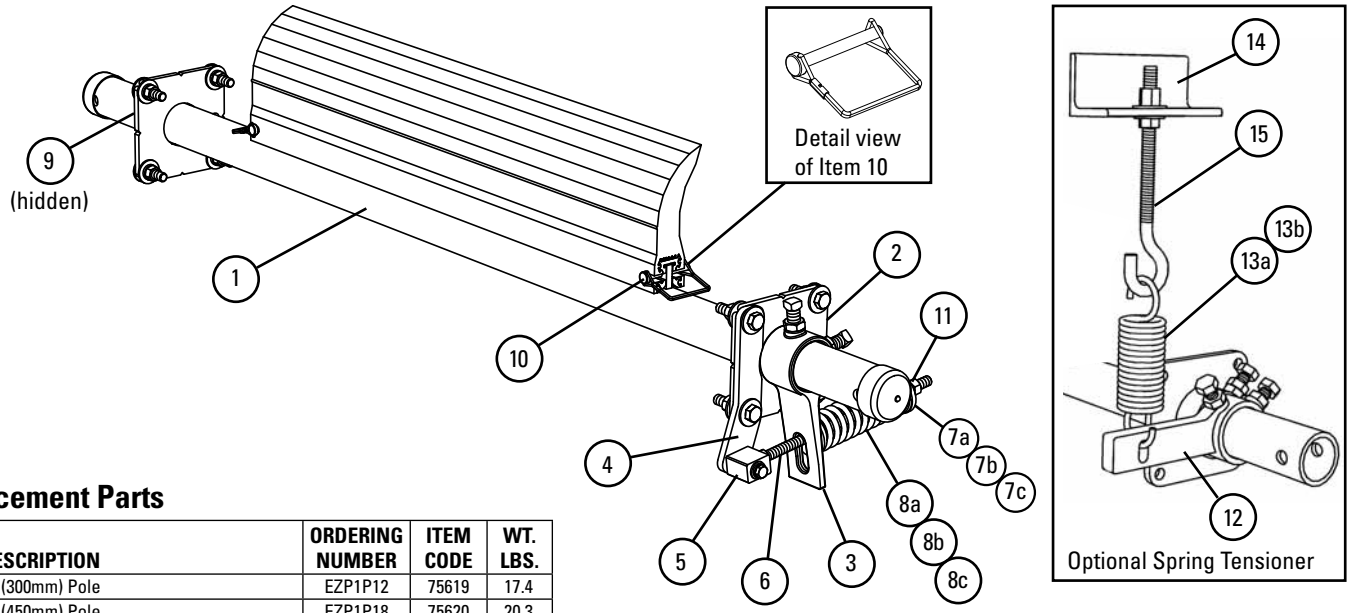

Replacement Parts

REF	DESCRIPTION	ORDERING NUMBER	ITEM CODE	WT. LBS.
1	12" (300mm) Pole	EZP1P12	75619	17.4
	18" (450mm) Pole	EZP1P18	75620	20.3
	24" (600mm) Pole	EZP1P24	75621	22.7
	30" (750mm) Pole	EZP1P30	75622	26.5
	36" (900mm) Pole	EZP1P36	75623	30.4
	42" (1050mm) Pole	EZP1P42	75624	32.7
	48" (1200mm) Pole	EZP1P48	75625	35.3
	54" (1350mm) Pole	EZP1P54	75626	39.2
	60" (1500mm) Pole	EZP1P60	75627	43.3
	72" (1800mm) Pole	EZP1P72	75772	48.2
2	Mounting Plate Kit* (2 ea.)	EZP1MPK	75637	7.7
3	Torque Arm Kit* (1 ea.)	ESTAK-EST	76406	3.6
4	Pivot Shaft Bracket Kit* (1 ea.)	ESPSBK	76407	1.8
5	Pivot Block Kit*	ESPBK	76408	0.7
6	Pivot Rod Kit*	ESPRK	76409	1.2
7a	Bushing Kit - Purple and Silver (includes 2 bushings)	ESBK-PS	76410	0.1
7b	Bushing Kit - Black (includes 2 bushings)	ESBK-B	76411	0.1
7c	EST Bushing Kit (for Ultra High-Temp EZP1) (includes 2 bushings)	ESBK-ATEX	90264	0.1
8a	Tension Spring - Purple	QMTS-P	75845	1.0
8b	Tension Spring - Silver	ESS-S	76412	1.2
8c	Tension Spring - Black	ESS-B	76413	1.4
9	Pole Lock* (1 ea.)	EZP1PL	75641	1.1
–	EST Tensioner - Purple* for blade widths 12" - 28" (300 - 700mm) (includes 1 each items 3, 4, 5, 6, 7a & 8a)	EST-P	76403	7.7
–	EST Tensioner - Silver* for blade widths 34" - 52" (850 - 1300mm) (includes 1 each items 3, 4, 5, 6, 7a & 8b)	EST-S	76404	7.9
–	EST Tensioner - Black* for blade widths 58" - 70" (1450 - 1750mm) (includes 1 each items 3, 4, 5, 6, 7b& 8c)	EST-B	76405	8.1
–	EST Ultra High Temp Tensioner - Purple* for blade widths 10"-28" (250-700mm) (includes 1 each items 3, 4, 5, 6, 7c & 8a)	EST-A-P	90814	7.7
–	EST Ultra High Temp Tensioner - Silver* for blade widths 34"-52" (850-1300mm) (includes 1 each items 3, 4, 5, 6, 7c & 8b)	EST-A-S	90815	7.9
–	EST Ultra High Temp Tensioner - Black* for blade widths 58"-70" (1450-1750mm) (includes 1 each items 3, 4, 5, 6, 7c & 8c)	EST-A-B	90816	8.1
10	Blade Pin (1 ea.)	EZP1BP	75642	0.1
11	Jam Nut Kit, EST Tensioner	JNK-A	79891	0.3

*Hardware Included
Lead time: 1 working day

Optional Spring Tensioner & Parts

REF	DESCRIPTION	ORDERING NUMBER	ITEM CODE	WT. LBS.
12	Tension Arm Kit* (1 ea.)	HAR-K	78786	6.0
13a	Tension Spring (1 ea.) for sizes 12" - 30" (300 - 750mm)	STTS	74419	1.4
13b	HD Tension Spring (1 ea.) for sizes 36" - 72" (900 - 1800mm)	HDTS	74502	2.0
14	Spring Tension J-Bolt Mount (1 ea.)	STJM	74775	3.0
15	J-Bolt Kit* (1 ea.)	STJK	74417	0.7
–	Optional Spring Tensioner Kit* for sizes 12" - 30" (300 - 750mm)	EZP1OTK1	76418	11.2
–	Optional Spring Tensioner Kit* for sizes 36" - 72" (900 - 1800mm)	EZP1OTK2	76419	11.8

* Hardware Included
Lead time: 1 working day

Spring Tensioner Selection Chart

CLEANER BLADE WIDTH	76403 EST-P	76404 EST-S	76405 EST-B
ConShear 12" - 28" (300 - 700mm)	X		
ConShear 34" - 52" (850 - 1300mm)		X	
ConShear 58" - 70" (1450 - 1750mm)			X

Spring Tensioner Selection Chart - EZP1 UHT Only

CLEANER BLADE WIDTH	90814 EST-A-P	90815 EST-A-S	90816 EST-A-B
UHT ConShear 10"-28" (250-700mm)	X		
UHT ConShear 34"-52" (850-1300mm)		X	
UHT ConShear 58"-70" (1450-1750mm)			X

Replacement Parts List

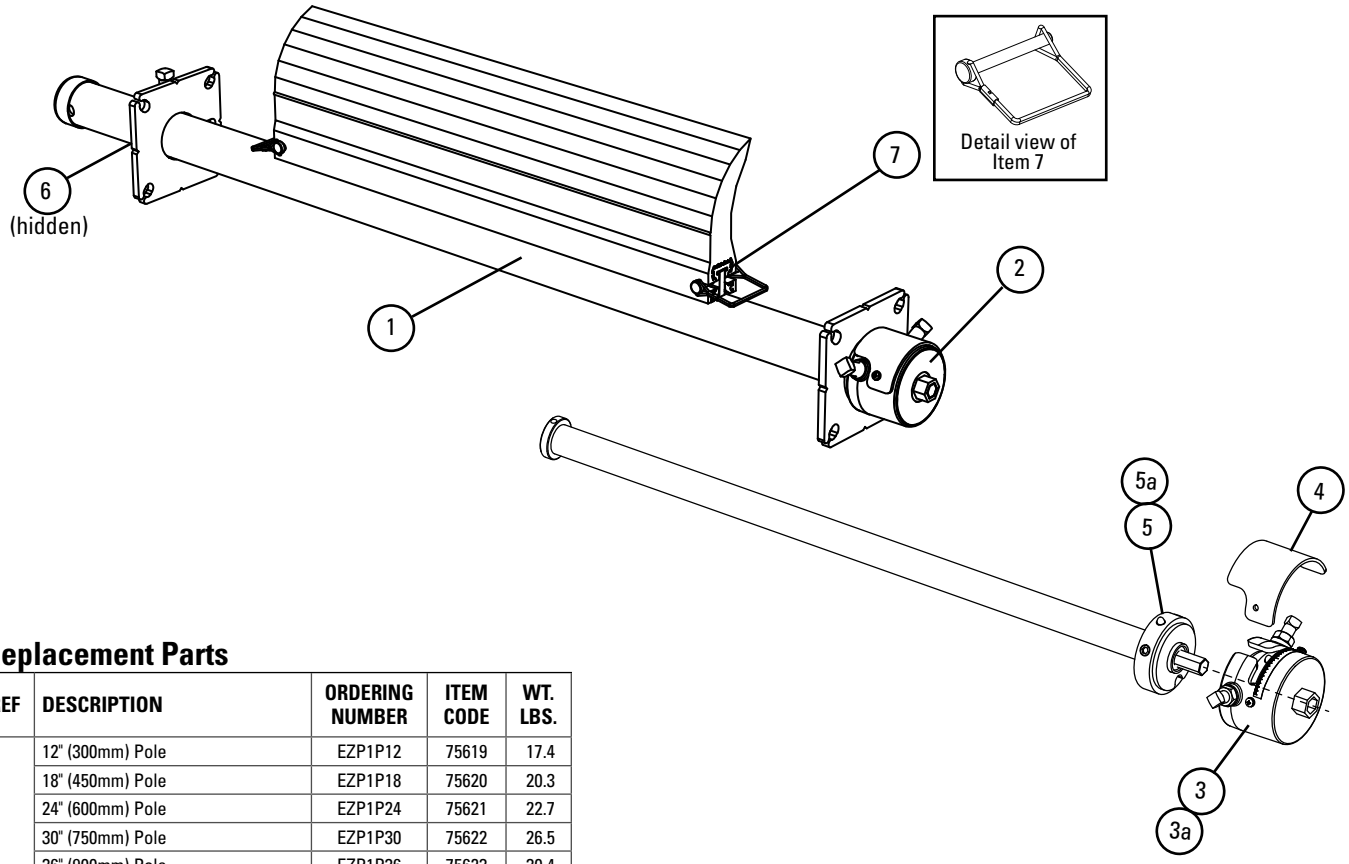

Replacement Parts

REF	DESCRIPTION	ORDERING NUMBER	ITEM CODE	WT. LBS.
1	12" (300mm) Pole	EZP1P12	75619	17.4
	18" (450mm) Pole	EZP1P18	75620	20.3
	24" (600mm) Pole	EZP1P24	75621	22.7
	30" (750mm) Pole	EZP1P30	75622	26.5
	36" (900mm) Pole	EZP1P36	75623	30.4
	42" (1050mm) Pole	EZP1P42	75624	32.7
	48" (1200mm) Pole	EZP1P48	75625	35.3
	54" (1350mm) Pole	EZP1P54	75626	39.2
	60" (1500mm) Pole	EZP1P60	75627	43.3
	72" (1800mm) Pole	EZP1P72	75772	48.2
2	Torsion Mounting Plate Kit* (2 ea.)	EZPTMPK	78507	8.7
3	Torsion Cap Kit* (1 ea.) (includes 1 ea. Item 4)	EZPTCK	78508	3.2
3a	Torsion Cap Kit HD* (1 ea.) (includes 1 ea. Item 4)	EZPTCKHD	78509	3.2
4	Torsion Shield	EZPTSR	78510	.1
5	Torsion Spring Kit	EZPTSK	78511	6.0
5a	Torsion Spring Kit HD	EZPTSKHD	78512	8.5
6	Pole Lock* (1 ea.)	EZP1PL	75641	1.1
–	Torsion Bar Tensioner for blade widths 12" - 48" (300 - 1200mm) (includes 1 each items 3, 4, & 5)	EZPTBT	77384	17.4
–	Torsion Bar Tensioner HD for blade widths 54" - 72" (1350 - 1800mm) (includes 1 each items 3a, 4, & 5a)	EZPTBTHD	77385	20.0
7	Blade Pin (1 ea.)	EZP1BP	75642	0.1

*Hardware Included
Lead time: 1 working day

Torsion Bar Tensioner Selection Chart

CLEANER BLADE WIDTH	77384 EZPTBT	77385 EZPTBTHD
ConShear 12" - 48" (300 - 1200mm)	X	
ConShear 54" - 72" (1350 - 1800mm)		X

Product Ordering Information

EZP1 Stainless Steel Precleaner with White ConShear™ Blade

EZP1 Stainless Steel Precleaner with White ConShear Blade Belt Width Minus 2" (50mm)

BELT WIDTH		BLADE WIDTH		ORDERING NUMBER	ITEM CODE	WT. LBS.
in.	mm	in.	mm			
12	300	10	250	CFG-212	78838	49.4
18	450	16	400	CFG-218	78839	55.3
24	600	22	550	CFG-224	78840	61.2
30	750	28	700	CFG-230	78841	67.1
36	900	34	850	CFG-236	78842	73.0
42	1050	40	1000	CFG-242	78843	78.9
48	1200	46	1150	CFG-248	78844	84.8
54	1350	52	1300	CFG-254	78845	90.7
60	1500	58	1450	CFG-260	78846	96.6

Lead time: 1 working day

EZP1 Stainless Steel Precleaner with White ConShear Blade Belt Width Minus 8" (200mm)

BELT WIDTH		BLADE WIDTH		ORDERING NUMBER	ITEM CODE	WT. LBS.
in.	mm	in.	mm			
12	300	–	–	N/A	N/A	–
18	450	10	250	CFG-818	78924	51.3
24	600	16	400	CFG-824	78925	57.2
30	750	22	550	CFG-830	78926	63.1
36	900	28	700	CFG-836	78927	69.0
42	1050	34	850	CFG-842	78928	74.9
48	1200	40	1000	CFG-848	78929	80.8
54	1350	46	1150	CFG-854	78930	86.7
60	1500	52	1300	CFG-860	78931	92.6

Lead time: 1 working day

Match blade width to belt's material path

Belt Width Minus 2" (50mm)

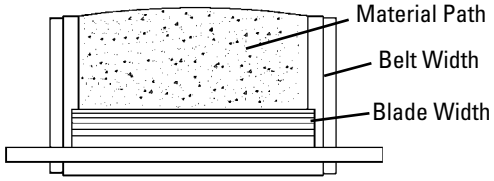

Belt Width Minus 8" (200mm)

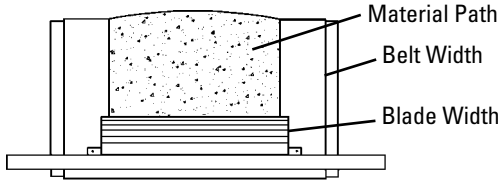

Product Notes:

- White food-grade ConShear Precleaner is chemical resistant and all ingredients used in polyurethane formulation comply with the relevant requirements of 21 CFR (FDA Code of Federal Regulations) for use in repeated bulk dry food applications.
- For optimal cleaning and reduced blade retensioning maintenance, the cleaner blade width should be sized to fit the material path of the belt. The material path is typically 2/3 of the belt width. In most cases a blade size of belt width minus 8" (200mm) may be the best selection.
- Each cleaner can be retrofitted with three replacement blade sizes (belt width minus 2" (50mm), minus 8" (200mm), or minus 14" (350mm)).
- Comes complete with universal mounting plates and tensioner.
- Visual tension check. No guesswork on blade tensioning. Simply measure the spring, check label on tensioner and turn adjusting nut to restore optimal tension.
- Works with mechanical splices. Polyurethane blade glides over splices.
- Compatible with reversing belts.
- For replacement parts see the EZP1 SS Parts List on 24.
- For applications requiring longer pole lengths, go to the minus 8"(200mm) chart and select the cleaner one belt width size larger. This will provide a pole 6" (150mm) longer and a blade size of belt width minus 2" (50mm).

ConShear™ Replacement Blades

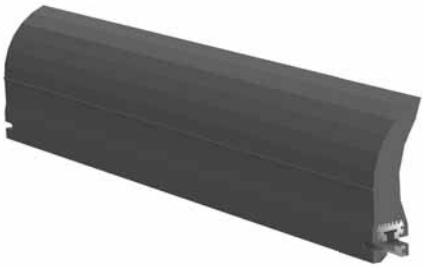

Blade Width Selection

BELT WIDTH		BELT WIDTH - 2" (50mm)		BELT WIDTH - 8" (200mm)		BELT WIDTH - 14" (350mm)	
in.	mm	in.	mm	in.	mm	in.	mm
12	300	10	250	N/A	N/A	N/A	N/A
18	450	16	400	10	250	N/A	N/A
24	600	22	550	16	400	10	250
30	750	28	700	22	550	16	400
36	900	34	850	28	700	22	550
42	1050	40	1000	34	850	28	700
48	1200	46	1150	40	1000	34	850
54	1350	52	1300	46	1150	40	1000
60	1500	58	1450	52	1300	46	1150
72	1800	70	1600	64	1600	58	1450

Replacement White ConShear™ Blades
(Chemical Resistant/Food Grade) ‡

BLADE WIDTH		ORDERING NUMBER	ITEM CODE	WT. LBS.
in.	mm			
10	250	CRB-W10	78471	4.8
16	400	CRB-W16	78472	7.6
22	550	CRB-W22	78473	10.4
28	700	CRB-W28	78474	13.2
34	850	CRB-W34	78475	16.2
40	1000	CRB-W40	78476	19.1
46	1150	CRB-W46	78477	21.9
52	1300	CRB-W52	78478	24.8
58	1450	CRB-W58	78479	27.6

Lead time: 1 working day

‡ All ingredients used in the polyurethane formulation of this blade comply with the relevant requirements of 21 CFR (FDA Code of Federal Regulations) for use in repeated bulk dry food applications

Replacement ConShear™ Blades

BLADE WIDTH		ORDERING NUMBER	ITEM CODE	WT. LBS.
in.	mm			
10	250	CRB10	75628	4.6
16	400	CRB16	75629	7.3
22	550	CRB22	75630	10.1
28	700	CRB28	75631	12.8
34	850	CRB34	75632	15.5
40	1000	CRB40	75633	18.3
46	1150	CRB46	75634	21.0
52	1300	CRB52	75635	23.8
58	1450	CRB58	75636	26.5
64	1600	CRB64	75775	29.2
70	1750	CRB70	75773	32.0
76	1900	CRB76	76940	34.7
82	2050	CRB82	76941	37.5

Other blade sizes available upon request.
Lead time: 1 working day

Replacement High Temp ConShear™ Blades
(Color Identification: Yellow)

BLADE WIDTH		ORDERING NUMBER	ITEM CODE	WT. LBS.
in.	mm			
10	250	CRB-HT10	76593	4.8
16	400	CRB-HT16	76594	7.6
22	550	CRB-HT22	76595	10.4
28	700	CRB-HT28	76596	13.2
34	850	CRB-HT34	76597	16.2
40	1000	CRB-HT40	76598	19.1
46	1150	CRB-HT46	76599	21.9
52	1300	CRB-HT52	76600	24.8
58	1450	CRB-HT58	76601	27.6
64	1600	CRB-HT64	76602	30.5
70	1750	CRB-HT70	76603	33.4

Lead time: 1 working day

Product Notes:

- Take blade width and ordering number from the worn blade and use the Replacement Blade Chart.
- For optimal cleaning and reduced blade retensioning maintenance, the cleaner blade width should be sized to fit the material path of the belt. The material path is typically 2/3 of the belt width. In most cases a blade size of belt width minus 8" (200mm) may be the best selection.
- The ConShear™ blade has a faceted profile that renews the cleaning edge as it wears.
- Visual tension check. No guesswork on blade tensioning. Simply measure the spring, check label on tensioner and turn adjusting nut to restore optimal tension.
- ConShear blades are made of a special long-wearing polyurethane.
- A molded-in blade wear line indicates when the blade is worn out and needs to be replaced.
- Blade replacement is quick. Pull one pin, remove the old blade and slide the new one in.
- For replacement parts see the EZP1SS Parts List on 24.

Specifications & Guidelines

EZP1 Stainless Steel Precleaner with White ConShear™ Blade

Pole Length Specifications

CLEANER SIZE		POLE LENGTH		MAXIMUM CONVEYOR SPAN	
in.	mm	in.	mm	in.	mm
12	300	42	1050	37	925
18	450	48	1200	43	1075
24	600	54	1350	49	1225
30	750	60	1500	55	1375
36	900	66	1650	61	1525
42	1050	72	1800	67	1675
48	1200	78	1950	73	1825
54	1350	88	2200	83	2075
60	1500	94	2350	89	2225

Pole Diameter – 2-3/8" (60mm)

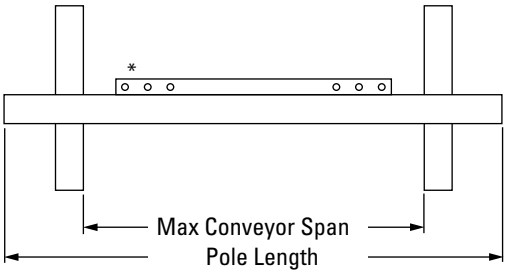

*Each pole size can be used with a blade size either belt width minus 2" (50mm), belt width minus 8" (200mm), or belt width minus 14" (350mm).

Clearance Guidelines For Installation

HORIZONTAL CLEARANCE REQUIRED		VERTICAL CLEARANCE REQUIRED	
in.	mm	in.	mm
4	100	9 1/2	238

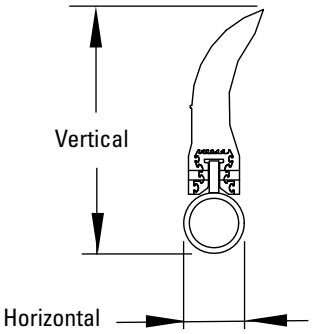

Pole Location Specs

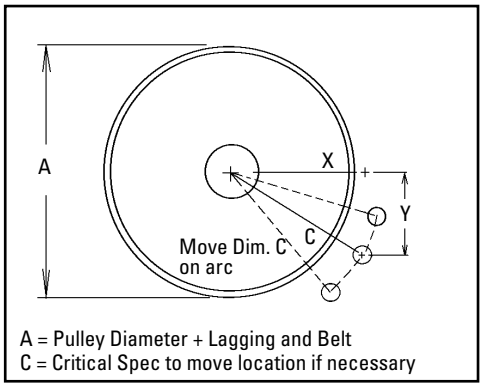

Spring Length Chart

BLADE WIDTH		PURPLE SPRING		WHITE SPRING		GOLD SPRING	
in.	mm	in.	mm	in.	mm	in.	mm
10	250	5 5/8	143	6 3/8	162	N/A	N/A
16	400	5	127	6 1/8	156	N/A	N/A
22	550	4 3/8	111	6	152	N/A	N/A
28	700	3 7/8	98	5 7/8	149	N/A	N/A
34	850	N/A	N/A	5 5/8	143	6 1/8	156
40	1000	N/A	N/A	5 1/2	140	6	152
46	1150	N/A	N/A	5 1/4	133	5 7/8	149
52	1300	N/A	N/A	5 1/8	130	5 7/8	149
58	1450	N/A	N/A	5	127	5 3/4	146
64	1600	N/A	N/A	4 3/4	121	5 5/8	143

Shading indicates preferred spring option

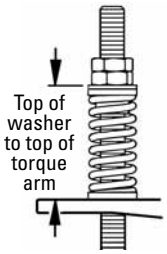

Pole Location Chart IMPERIAL

A	X	Y	C
10	3	9	9 1/2
11	3 3/4	9	9 3/4
12	4 3/8	9	10
13	5 3/8	9	10 1/2
14	5 7/8	9	10 3/4
15	6 3/8	9	11 1/4
16	7 1/8	9	11 1/2
17	7 7/8	9	12
18	8 1/4	9	12 1/4
19	9	9	12 3/4
20	9 3/8	9	13
21	10	9	13 1/2
22	10 3/4	9	14
23	11 3/8	9	14 1/2
24	12	9	15
25	12 5/8	9	15 1/2
26	13 1/4	9	16
27	13 7/8	9	16 1/2
28	14 3/8	9	17
29	15	9	17 1/2
30	15 5/8	9	18
31	16 1/8	9	18 1/2
32	16 3/4	9	19
33	17 1/4	9	19 1/2
34	17 7/8	9	20
35	18 3/8	9	20 1/2
36	19	9	21

Pole Location Chart METRIC

A	X	Y	C
250	74	230	242
275	92	230	248
300	108	230	254
325	131	230	265
350	146	230	273
375	166	230	284
400	179	230	291
425	195	230	301
450	207	230	309
475	223	230	320
500	235	230	329
525	249	230	339
550	266	230	352
575	283	230	365
600	299	230	377
625	314	230	390
650	330	230	402
675	346	230	415
700	360	230	427
725	374	230	439
775	389	230	452
775	403	230	464
825	417	230	477
825	432	230	489
850	446	230	501
875	460	230	514
900	474	230	526

Specifications:

- Maximum Belt Speed .....700 FPM (3.5M/sec)
- Temperature Rating .....-30°F to 180°F (-35°C to 82°C)
- Minimum Pulley Diameter.....10" (250mm)
- Blade Height.....7-1/4" (185mm)
- Usable Blade Wear Length.....4" (100mm)
- Blade Material .....Polyurethane (chemical resistant/ food grade)
- Available for Belt Widths .....12" to 60" (300 to 1500mm)
- CEMA Cleaner Rating .....Class 2

Replacement Parts List

EZP1 Stainless Steel
Precleaner with White ConShear™ Blade

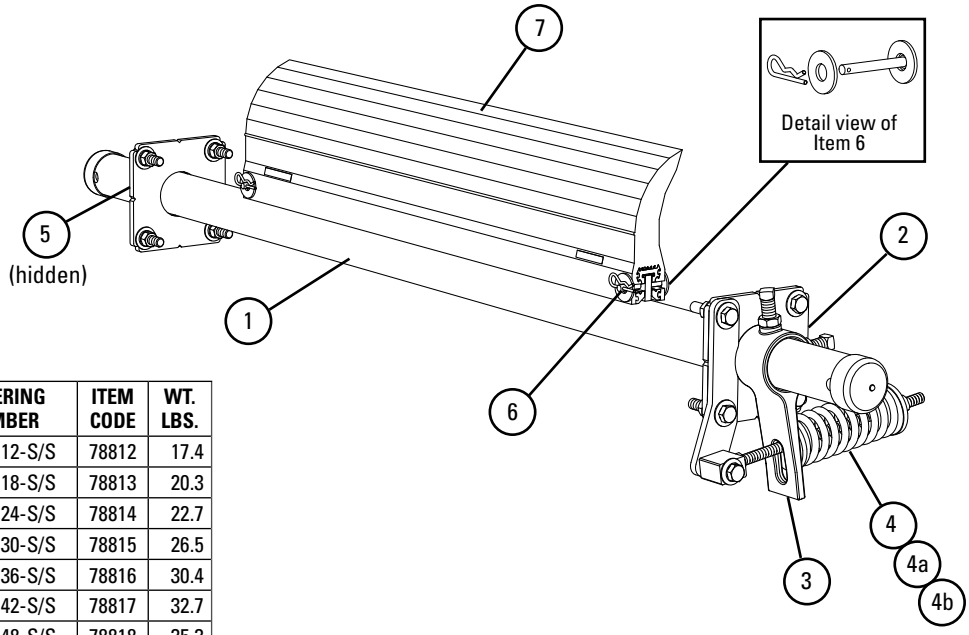

Replacement Parts

REF	DESCRIPTION	ORDERING NUMBER	ITEM CODE	WT. LBS.
1	12" (300mm) SS Pole	EZP1P12-S/S	78812	17.4
	18" (450mm) SS Pole	EZP1P18-S/S	78813	20.3
	24" (600mm) SS Pole	EZP1P24-S/S	78814	22.7
	30" (750mm) SS Pole	EZP1P30-S/S	78815	26.5
	36" (900mm) SS Pole	EZP1P36-S/S	78816	30.4
	42" (1050mm) SS Pole	EZP1P42-S/S	78817	32.7
	48" (1200mm) SS Pole	EZP1P48-S/S	78818	35.3
	54" (1350mm) SS Pole	EZP1P54-S/S	78819	39.2
	60" (1500mm) SS Pole	EZP1P60-S/S	78820	43.3
	72" (1800mm) SS Pole	EZP1P72-S/S	78821	48.2
2	SS Mounting Plate Kit* (2 ea.)	EZP1MPK-S/S	78923	7.7
3	SS Torque Arm Kit* (1 ea.)	ESTAK-EST-S/S	78849	3.6
4	SS Tension Spring - Purple	QMTS-P-S/S	77450	1.0
4a	SS Tension Spring - White	QMTS-W-S/S	77451	1.2
4b	SS Tension Spring - Gold	QMTS-G-S/S	77452	1.4
5	SS Pole Lock* (1 ea.)	EZP1PL-S/S	78848	1.1
–	SS EST Tensioner - Purple* for blade widths 12" - 28" (300 - 700mm) (includes 1 each items 2, 3, 4)	EST-P-S/S	78808	7.7
–	SS EST Tensioner - White* for blade widths 34" - 52" (850 - 1300mm) (includes 1 each items 2, 3, 4a)	EST-W-S/S	78809	7.9
–	SS EST Tensioner - Gold* for blade widths 58" - 70" (1450 - 1750mm) (includes 1 each items 2, 3, 4b)	EST-G-S/S	78810	8.1
6	Blade Pin (1 ea.)	MSPBPK-S/S	77583	0.1

*Hardware Included
Lead time: 1 working day

Spring Tensioner Selection Chart

Cleaner Blade Width	78808 EST-P-S/S	78809 EST-W-S/S	78810 EST-G-S/S
ConShear 12" - 28" (300 - 700mm)	X		
ConShear 34" - 52" (850 - 1300mm)		X	
ConShear 58" - 70" (1450 - 1750mm)			X

For best results use Flexco Genuine Replacement Blades and Parts.

Product Ordering Information

EZP-LS Precleaner
Belt Width Minus 2" (50mm)

BELT WIDTH		BLADE WIDTH		ORDERING NUMBER	ITEM CODE	WT. LBS.
in.	mm	in.	mm			
12	300	10	250	EZP-LS212	77127	24.8
18	450	16	400	EZP-LS218	77128	28.2
24	600	22	550	EZP-LS224	77129	31.7
30	750	28	700	EZP-LS230	77130	35.1
36	900	34	850	EZP-LS236	77131	38.6
42	1050	40	1000	EZP-LS242	77132	42.0
48	1200	46	1150	EZP-LS248	77133	45.5
54	1350	52	1300	EZP-LS254	77134	48.9
60	1500	58	1450	EZP-LS260	77135	52.5

Lead time: 1 working day

EZP-LS Precleaner
Belt Width Minus 8" (200mm)

BELT WIDTH		BLADE WIDTH		ORDERING NUMBER	ITEM CODE	WT. LBS.
in.	mm	in.	mm			
18	450	10	250	EZP-LS818	77136	27.0
24	600	16	400	EZP-LS824	77137	30.4
30	750	22	550	EZP-LS830	77138	33.9
36	900	28	700	EZP-LS836	77139	37.3
42	1050	34	850	EZP-LS842	77140	40.8
48	1200	40	1000	EZP-LS848	77141	44.2
54	1350	46	1150	EZP-LS854	77142	47.7
60	1500	52	1300	EZP-LS860	77143	51.2

Lead time: 1 working day

Match blade width to belt's material path

Belt Width Minus 2" (50mm)

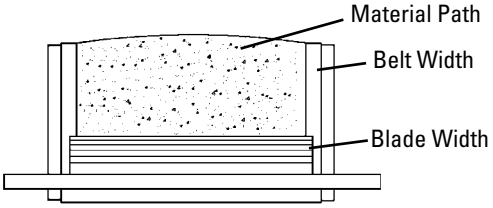

Belt Width Minus 8" (200mm)

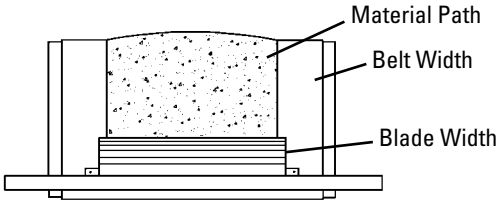

Product Notes:

- For optimal cleaning and reduced blade retensioning maintenance, the cleaner blade width should be sized to fit the material path of the belt. The material path is typically 2/3 of the belt width.
- Each cleaner can be retrofitted with three replacement blade sizes (belt width minus 2" (50mm), minus 8" (200mm), or minus 14" (350mm).
- Comes complete with universal mounting plates and tensioner.
- Visual tension check. No guesswork on blade tensioning. Simply measure the spring, check label on tensioner and turn adjusting nut to restore optimal tension.
- Visual blade wear check. Tensioner has built-in gauge to monitor blade wear.
- Works with mechanical splices. Polyurethane blade glides over splices.
- Compatible with reversing belts.
- For replacement parts see the EZP-LS Parts List on 29.
- For applications requiring longer pole lengths, go to the minus 8" (200mm) chart and select the cleaner one belt width size larger. This will provide a pole 6" (150mm) longer and a blade size of belt width minus 2" (50mm).

Product Ordering Information

High Temp EZP-LS
Limited Space Precleaner

EZP-LS High-Temp Precleaner
Belt Width Minus 2" (50mm)

BELT WIDTH		BLADE WIDTH		ORDERING NUMBER	ITEM CODE	WT. LBS.
in.	mm	in.	mm			
12	300	10	250	EZP-LS212HT	77746	24.8
18	450	16	400	EZP-LS218HT	77747	28.2
24	600	22	550	EZP-LS224HT	77748	31.7
30	750	28	700	EZP-LS230HT	77749	35.1
36	900	34	850	EZP-LS236HT	77750	38.6
42	1050	40	1000	EZP-LS242HT	77751	42.0
48	1200	46	1150	EZP-LS248HT	77752	45.5
54	1350	52	1300	EZP-LS254HT	77753	48.9
60	1500	58	1450	EZP-LS260HT	77754	52.5

Lead time: 1 working day

Match blade width to belt's material path

Belt Width Minus 2" (50mm)

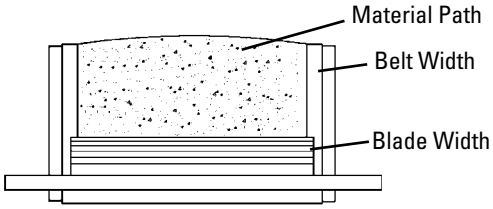

Product Notes:

- The high-temp ConShear LS works in temperatures up to 275°F (135°C) with spikes to 325°F (164°C).
- Each cleaner can be retrofitted with three replacement blade sizes (belt width minus 2" (50mm), minus 8" (200mm), or minus 14" (350mm).
- Comes complete with universal mounting plates and tensioner.
- Visual tension check. No guesswork on blade tensioning. Simply measure the spring, check label on tensioner and turn adjusting nut to restore optimal tension.
- Visual blade wear check. Tensioner has built-in gauge to monitor blade wear.
- Works with mechanical splices. Polyurethane blade glides over splices.
- Compatible with reversing belts.
- For replacement parts see the EZP-LS Parts List on 29.

ConShear™ LS Replacement Blades

Blade Width Selection

BELT WIDTH		BELT WIDTH - 2" (50mm)		BELT WIDTH - 8" (200mm)		BELT WIDTH - 14" (350mm)	
in.	mm	in.	mm	in.	mm	in.	mm
12	300	10	250	N/A	N/A	N/A	N/A
18	450	16	400	10	250	N/A	N/A
24	600	22	550	16	400	10	250
30	750	28	700	22	550	16	400
36	900	34	850	28	700	22	550
42	1050	40	1000	34	850	28	700
48	1200	46	1150	40	1000	34	850
54	1350	52	1300	46	1150	40	1000
60	1500	58	1450	52	1300	46	1150

Replacement ConShear™-LS Blades

BLADE WIDTH		ORDERING NUMBER	ITEM CODE	WT. LBS.
in.	mm			
10	250	CRB-LS10	77088	2.1
16	400	CRB-LS16	77089	3.3
22	550	CRB-LS22	77090	4.6
28	700	CRB-LS28	77091	5.8
34	850	CRB-LS34	77092	7.1
40	1000	CRB-LS40	77093	8.3
46	1150	CRB-LS46	77094	9.6
52	1300	CRB-LS52	77095	10.8
58	1450	CRB-LS58	77096	12.1

Other blade sizes available upon request.
Lead time: 1 working day

Replacement ConShear™-LS High-Temp Blades

BLADE WIDTH		ORDERING NUMBER	ITEM CODE	WT. LBS.
in.	mm			
10	250	CRB-LS10HT	77551	2.1
16	400	CRB-LS16HT	77552	3.3
22	550	CRB-LS22HT	77553	4.6
28	700	CRB-LS28HT	77554	5.8
34	850	CRB-LS34HT	77555	7.1
40	1000	CRB-LS40HT	77556	8.3
46	1150	CRB-LS46HT	77557	9.6
52	1300	CRB-LS52HT	77558	10.8
58	1450	CRB-LS58HT	77559	12.1

Other blade sizes available upon request.
Lead time: 1 working day

Replacement ConShear™-LS White Blades (Chemical Resistant/Food Grade) ‡

BLADE WIDTH		ORDERING NUMBER	ITEM CODE	WT. LBS.
in.	mm			
10	250	CRB-LS10W	77097	2.1
16	400	CRB-LS16W	77098	3.3
22	550	CRB-LS22W	77099	4.6
28	700	CRB-LS28W	77100	5.8
34	850	CRB-LS34W	77101	7.1
40	1000	CRB-LS40W	77102	8.3
46	1150	CRB-LS46W	77103	9.6
52	1300	CRB-LS52W	77104	10.8
58	1450	CRB-LS58W	77105	12.1

Other blade sizes available upon request.
Lead time: 1 working day

‡ All ingredients used in the polyurethane formulation of this blade comply with the relevant requirements of 21 CFR (FDA Code of Federal Regulations) for use in repeated bulk dry food applications

Product Notes:

- Take blade width and ordering number from the worn blade and use the Replacement Blade Chart.
- For optimal cleaning and reduced blade retensioning maintenance, the cleaner blade width should be sized to fit the material path of the belt. The material path is typically 2/3 of the belt width.
- The ConShear™ blade has a faceted profile that renews the cleaning edge as it wears.
- Visual tension check. No guesswork on blade tensioning. Simply measure the spring, check label on tensioner and turn adjusting nut to restore optimal tension.
- ConShear blades are made of a special long-wearing polyurethane.
- A molded-in blade wear line indicates when the blade is worn out and needs to be replaced.
- Blade replacement is quick. Pull one pin, remove the old blade and slide the new one in.

Pole Length Specifications

CLEANER SIZE		POLE LENGTH		MAXIMUM CONVEYOR SPAN	
in.	mm	in.	mm	in.	mm
12	300	42	1050	37	925
18	450	48	1200	43	1075
24	600	54	1350	49	1225
30	750	60	1500	55	1375
36	900	66	1650	61	1525
42	1050	72	1800	67	1675
48	1200	78	1950	73	1825
54	1350	88	2200	83	2075
60	1500	94	2350	89	2225

Pole Diameter – 1-7/8" (48 mm)

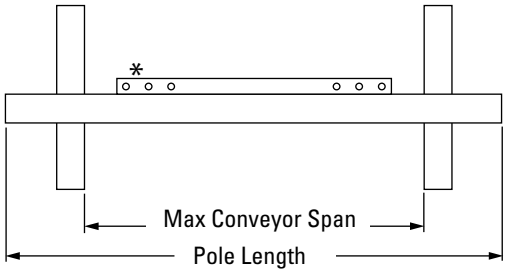

*Each pole size can be used with a blade size either belt width minus 2" (50mm), belt width minus 8" (200mm), or belt width minus 14" (350mm).

Pole Location Specs

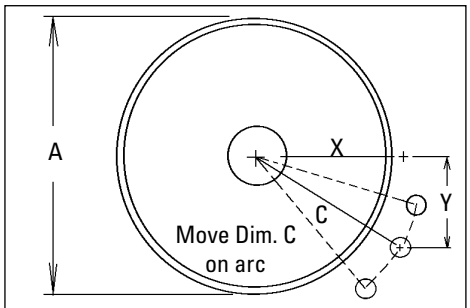

A = Pulley Diameter + Lagging and Belt
C = Critical Spec to move location if necessary

Clearance Guidelines for Installation

HORIZONTAL CLEARANCE REQUIRED		VERTICAL CLEARANCE REQUIRED	
in.	mm	in.	mm
3	75	6 1/2	165

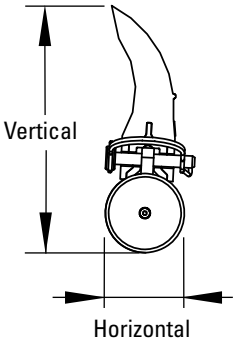

Spring Length Chart

EZP-LS w/Purple or Yellow Blade

BLADE WIDTH		PURPLE SPRING		WHITE SPRING		SILVER SPRING	
in.	mm	in.	mm	in.	mm	in.	mm
10	250	2	51	N/A	N/A	N/A	N/A
16	400	1 5/8	48	2 1/8	54	N/A	N/A
22	550	N/A	N/A	2	51	N/A	N/A
28	700	N/A	N/A	1 7/8	48	N/A	N/A
34	850	N/A	N/A	1 3/4	44	N/A	N/A
40	1000	N/A	N/A	1 1/2	38	N/A	N/A
46	1150	N/A	N/A	1 3/8	35	2	51
52	1300	N/A	N/A	N/A	N/A	2	51
58	1450	N/A	N/A	N/A	N/A	1 7/8	48

Shading indicates preferred spring option

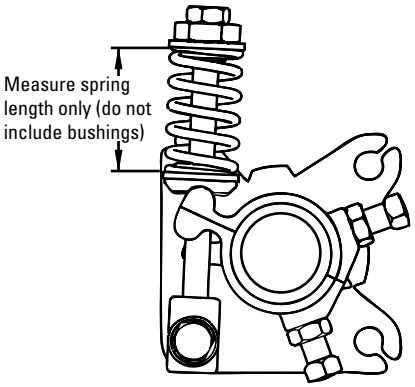

Pole Location Chart - Imperial

A	X	Y	C
6"	2 5/8"	5 1/2"	6 1/8"
7"	3 1/4"	5 1/2"	6 3/8"
8"	3 7/8"	5 1/2"	6 3/4"
9"	4 3/8"	5 1/2"	7"
10"	5"	5 1/2"	7 3/8"
11"	5 1/2"	5 1/2"	7 3/4"
12"	6 1/8"	5 1/2"	8 1/4"
13"	6 5/8"	5 1/2"	8 5/8"
14"	7 1/8"	5 1/2"	9"
15"	7 5/8"	5 1/2"	9 3/8"
16"	8 1/4"	5 1/2"	9 7/8"
17"	8 3/4"	5 1/2"	10 3/8"
18"	9 1/4"	5 1/2"	10 3/4"
19"	9 3/4"	5 1/2"	11 1/4"
20"	10 1/4"	5 1/2"	11 5/8"
21"	10 3/4"	5 1/2"	12 1/8"
22"	11 1/4"	5 1/2"	12 1/2"

Pole Location Chart - Metric

A	X	Y	C
150	65	140	150
175	81	140	155
200	96	140	162
225	109	140	171
250	125	140	179
275	138	140	189
300	153	140	198
325	166	140	209
350	178	140	219
375	191	140	229
400	206	140	239
425	219	140	252
450	231	140	263
475	244	140	273
500	256	140	284
525	269	140	295
550	281	140	307

Specifications:

- Maximum Belt Speed ..... 500 FPM (2.5M/sec)
- Temperature Rating (ConShear, ConShear White) ..... -30°F to 180°F (-35°C to 82°C)
- Temperature Rating (ConShear High Temp) ..... Up to 275°F (135°C) with spikes to 325°F (164°C)
- Minimum Pulley Diameter ..... 6" (150mm)
- Blade Height ..... 4.5" (115mm)
- Usable Blade Wear Length ..... 2-3/8" (60mm)
- Blade Material ..... Polyurethane (proprietary blend for abrasion resistance and long wear)
- Available for Belt Widths ..... 12" to 60" (300 to 1500mm)
- CEMA Cleaner Rating ..... Class 2

Replacement Parts List

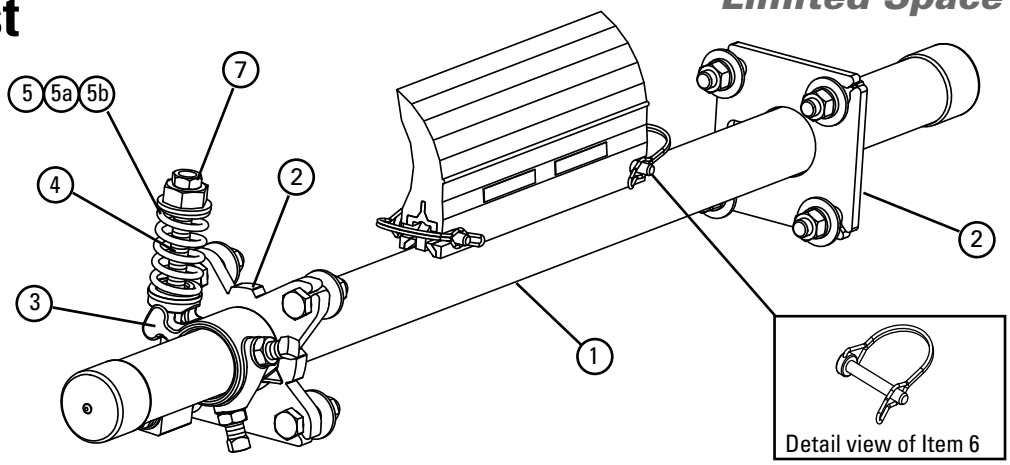

Replacement Parts

REF	DESCRIPTION	ORDERING NUMBER	ITEM CODE	WT. LBS.
1	12" (300mm) Pole	LSP12	77070	13.3
	18" (450mm) Pole	LSP18	77071	15.5
	24" (600mm) Pole	LSP24	77072	17.7
	30" (750mm) Pole	LSP30	77073	19.9
	36" (900mm) Pole	LSP36	77074	22.1
	42" (1050mm) Pole	LSP42	77075	24.3
	48" (1200mm) Pole	LSP48	77076	26.5
	54" (1350mm) Pole	LSP54	77077	28.7
	60" (1500mm) Pole	LSP60	77078	31.0
2	Mounting Plate Kit* (incl. 1 tensioner mounting plate and 1 pole mounting plate)	LSTMPK	77366	3.6
3	Torque Arm Kit* (1 ea.)	LST-TAK	77120	1.4
4	Pivot Block/Rod Kit* (1 ea.)	LSTPB-RK	77367	.8
5	Tension Spring - Purple (1 ea.) for blades 10-16" (250-400mm)	LS-SPK	77365	.2
5a	Tension Spring - White (1 ea.) for blades 22" - 46" (550 - 1150mm)	LS-SW	77117	.3
5b	Tension Spring - Silver (1 ea.) for blades 52" - 58" (1300 - 1450mm)	LS-SS	77118	.3
6	LS Blade Pin (1 ea.)	LS-BP	77114	.1
7	Jam Nut Kit LST Tensioner	JNK-B	79892	.3
-	LST Spring Tensioner* - Purple incl. 1 tensioner mounting plate and 1 ea. items 3, 4 & 5 for blades 10"-16" (250-400mm)	LST-P	77121	7.5
-	LST Spring Tensioner* - White incl. 1 tensioner mounting plate and 1 ea. items 3, 4 & 5a for blades 22"- 46" (550 - 1150mm)	LST-W	77122	7.6
-	LST Spring Tensioner* - Silver incl. 1 tensioner mounting plate and 1 ea. items 3, 4 & 5b for blades 52"- 58" (1300 - 1450mm)	LST-S	77123	7.6

Hardware Included

For Arch/Gordon Mini-Saber Blades

BELT WIDTH		BLADE WIDTH		ORDERING NUMBER	ITEM CODE	ARCH/GORDON PART NUMBER	WT. LBS.
in.	mm	in.	mm				
18	450	16	400	RBAGM-16	77106	MRBMN00018	3.3
24	600	22	550	RBAGM-22	77107	MRBMN00024	4.6
30	750	28	700	RBAGM-28	77108	MRBMN00030	5.8
36	900	34	850	RBAGM-34	77109	MRBMN00036	7.1
42	1050	40	1000	RBAGM-40	77110	MRBMN00042	8.3
48	1200	46	1150	RBAGM-46	77111	MRBMN00048	9.6

Additional sizes are available upon request. Call for pricing.

Spring Tensioner Selection Chart

CLEANER BLADE WIDTH	77121 Purple	77122 White	77123 Silver
ConShear-LS 10" - 16" (250 - 400mm)	X		
ConShear-LS 22" - 46" (550 - 1150mm)		X	
ConShear-LS 52" - 58" (1300 - 1450mm)			X

For best results use Flexco Genuine Replacement Blades and Parts.

Product Ordering Information

EZP-LS Stainless Steel
Limited Space Precleaner with White ConShear™ LS Blade

EZP-LS Stainless Steel Precleaner with White ConShear™ LS Blade Belt Width Minus 2" (50mm)

BELT WIDTH		BLADE WIDTH		ORDERING NUMBER	ITEM CODE	WT. LBS.
in.	mm	in.	mm			
12	300	10	250	CLSFG-212	77144	24.8
18	450	16	400	CLSFG-218	77145	28.2
24	600	22	550	CLSFG-224	77146	31.7
30	750	28	700	CLSFG-230	77147	35.1
36	900	34	850	CLSFG-236	77148	38.6
42	1050	40	1000	CLSFG-242	77149	42.0
48	1200	46	1150	CLSFG-248	77150	45.5
54	1350	52	1300	CLSFG-254	77151	48.9
60	1500	58	1450	CLSFG-260	77152	52.5

Lead time: 1 working day

EZP-LS Stainless Steel Precleaner with White ConShear™ LS Blade Belt Width Minus 8" (200mm)

BELT WIDTH		BLADE WIDTH		ORDERING NUMBER	ITEM CODE	WT. LBS.
in.	mm	in.	mm			
18	450	10	250	CLSFG-818	77153	27.0
24	600	16	400	CLSFG-824	77154	30.4
30	750	22	550	CLSFG-830	77155	33.9
36	900	28	700	CLSFG-836	77156	37.3
42	1050	34	850	CLSFG-842	77157	40.8
48	1200	40	1000	CLSFG-848	77158	44.2
54	1350	46	1150	CLSFG-854	77159	47.7
60	1500	52	1300	CLSFG-860	77160	51.2

Lead time: 1 working day

Match blade width to belt's material path

Belt Width Minus 2" (50mm)

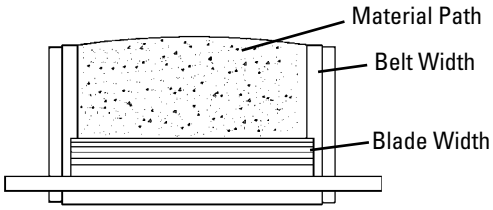

Belt Width Minus 8" (200mm)

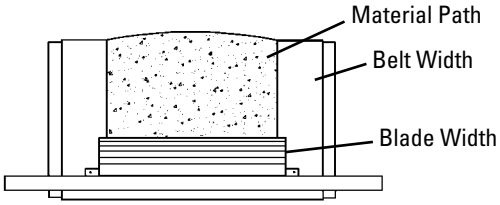

Product Notes:

- White food-grade ConShear Precleaner is chemical resistant and all ingredients used in polyurethane formulation comply with the relevant requirements of 21 CFR (FDA Code of Federal Regulations) for use in repeated bulk dry food applications.
- For optimal cleaning and reduced blade retensioning maintenance, the cleaner blade width should be sized to fit the material path of the belt. The material path is typically 2/3 of the belt width.
- Each cleaner can be retrofitted with three replacement blade sizes (belt width -2" (50mm), -8" (200mm), or -14" (350mm)).
- Comes complete with universal mounting plates and tensioner(s).
- Visual tension check. No guesswork on blade tensioning. Simply measure the spring, check label on tensioner and turn adjusting nut to restore optimal tension.
- Visual blade wear check. Tensioner has built-in gauge to monitor blade wear.
- Works with mechanical splices. Polyurethane blade glides over splices.
- Compatible with reversing belts.
- For replacement parts see the EZP-LS SS Parts List on 33.
- For applications requiring longer pole lengths, go to the minus 8" (200mm) chart and select the cleaner one belt width size larger. This will provide a pole 6" (150mm) longer and a blade size of belt width minus 2" (50mm).

ConShear™ LS Replacement Blades

Blade Width Selection

BELT WIDTH		BELT WIDTH - 2" (50mm)		BELT WIDTH - 8" (200mm)		BELT WIDTH - 14" (350mm)	
in.	mm	in.	mm	in.	mm	in.	mm
12	300	10	250	N/A	N/A	N/A	N/A
18	450	16	400	10	250	N/A	N/A
24	600	22	550	16	400	10	250
30	750	28	700	22	550	16	400
36	900	34	850	28	700	22	550
42	1050	40	1000	34	850	28	700
48	1200	46	1150	40	1000	34	850
54	1350	52	1300	46	1150	40	1000
60	1500	58	1450	52	1300	46	1150

Replacement ConShear™-LS Blades

BLADE WIDTH		ORDERING NUMBER	ITEM CODE	WT. LBS.
in.	mm			
10	250	CRB-LS10	77088	2.1
16	400	CRB-LS16	77089	3.3
22	550	CRB-LS22	77090	4.6
28	700	CRB-LS28	77091	5.8
34	850	CRB-LS34	77092	7.1
40	1000	CRB-LS40	77093	8.3
46	1150	CRB-LS46	77094	9.6
52	1300	CRB-LS52	77095	10.8
58	1450	CRB-LS58	77096	12.1

Other blade sizes available upon request.
Lead time: 1 working day

Replacement ConShear™-LS White Blades (Chemical Resistant/Food Grade) ‡

BLADE WIDTH		ORDERING NUMBER	ITEM CODE	WT. LBS.
in.	mm			
10	250	CRB-LS10W	77097	2.1
16	400	CRB-LS16W	77098	3.3
22	550	CRB-LS22W	77099	4.6
28	700	CRB-LS28W	77100	5.8
34	850	CRB-LS34W	77101	7.1
40	1000	CRB-LS40W	77102	8.3
46	1150	CRB-LS46W	77103	9.6
52	1300	CRB-LS52W	77104	10.8
58	1450	CRB-LS58W	77105	12.1

Other blade sizes available upon request.
Lead time: 1 working day

‡ All ingredients used in the polyurethane formulation of this blade comply with the relevant requirements of 21 CFR (FDA Code of Federal Regulations) for use in repeated bulk dry food applications

Replacement ConShear™ -LS High-Temp Blades

BLADE WIDTH		ORDERING NUMBER	ITEM CODE	WT. LBS.
in.	mm			
10	250	CRB-LS10HT	77551	2.1
16	400	CRB-LS16HT	77552	3.3
22	550	CRB-LS22HT	77553	4.6
28	700	CRB-LS28HT	77554	5.8
34	850	CRB-LS34HT	77555	7.1
40	1000	CRB-LS40HT	77556	8.3
46	1150	CRB-LS46HT	77557	9.6
52	1300	CRB-LS52HT	77558	10.8
58	1450	CRB-LS58HT	77559	12.1

Other blade sizes available upon request.
Lead time: 1 working day

Product Notes:

- Take blade width and ordering number from the worn blade and use the Replacement Blade Chart.
- For optimal cleaning and reduced blade retensioning maintenance, the cleaner blade width should be sized to fit the material path of the belt. The material path is typically 2/3 of the belt width.
- The ConShear™ blade has a faceted profile that renews the cleaning edge as it wears.
- Visual tension check. No guesswork on blade tensioning. Simply measure the spring, check label on tensioner and turn adjusting nut to restore optimal tension.
- ConShear blades are made of a special long-wearing polyurethane.
- A molded-in blade wear line indicates when the blade is worn out and needs to be replaced.
- Blade replacement is quick. Pull one pin, remove the old blade and slide the new one in.

Specifications & Guidelines

EZP-LS Stainless Steel
Limited Space Precleaner with White ConShear™ LS Blade

Pole Length Specifications

CLEANER SIZE		POLE LENGTH		MAXIMUM CONVEYOR SPAN	
in.	mm	in.	mm	in.	mm
12	300	42	1050	37	925
18	450	48	1200	43	1075
24	600	54	1350	49	1225
30	750	60	1500	55	1375
36	900	66	1650	61	1525
42	1050	72	1800	67	1675
48	1200	78	1950	73	1825
54	1350	88	2200	83	2075
60	1500	94	2350	89	2225

Pole Diameter - 1-7/8" (48 mm)

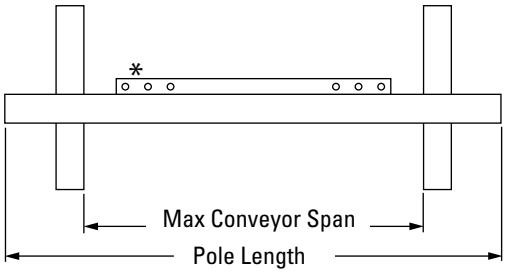

**Each pole size can be used with a blade size either belt width minus 2" (50mm), belt width minus 8" (200mm), or belt width minus 14" (350mm).*

Pole Location Specs

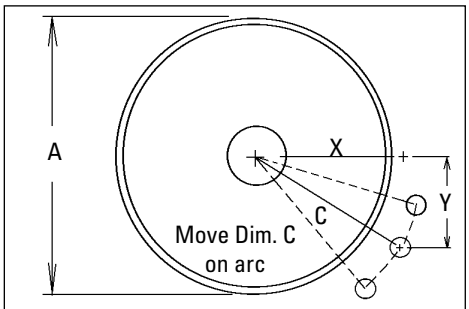

A = Pulley Diameter + Lagging and Belt
C = Critical Spec to move location if necessary

Pole Location Chart – Imperial

A	X	Y	C
6"	2 5/8"	5 1/2"	6 1/8"
7"	3 1/4"	5 1/2"	6 3/8"
8"	3 7/8"	5 1/2"	6 3/4"
9"	4 3/8"	5 1/2"	7"
10"	5"	5 1/2"	7 3/8"
11"	5 1/2"	5 1/2"	7 3/4"
12"	6 1/8"	5 1/2"	8 1/4"
13"	6 5/8"	5 1/2"	8 5/8"
14"	7 1/8"	5 1/2"	9"
15"	7 5/8"	5 1/2"	9 3/8"
16"	8 1/4"	5 1/2"	9 7/8"
17"	8 3/4"	5 1/2"	10 3/8"
18"	9 1/4"	5 1/2"	10 3/4"
19"	9 3/4"	5 1/2"	11 1/4"
20"	10 1/4"	5 1/2"	11 5/8"
21"	10 3/4"	5 1/2"	12 1/8"
22"	11 1/4"	5 1/2"	12 1/2"

Clearance Guidelines for Installation

HORIZONTAL CLEARANCE REQUIRED		VERTICAL CLEARANCE REQUIRED	
in.	mm	in.	mm
3	75	6 1/2	165

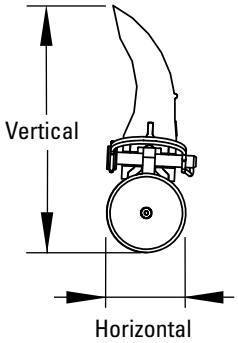

Spring Length Chart

BLADE WIDTH		BLACK SPRING		WHITE SPRING		DUAL WHITE SPRINGS	
in.	mm	in.	mm	in.	mm	in.	mm
10	250	3 1/2	89	3 3/4	95	3 7/8	98
16	400	3 1/4	83	3 5/8	92	3 7/8	98
22	550	2 7/8	73	3 1/2	89	3 3/4	95
28	700	2 5/8	67	3 3/8	86	3 3/4	95
34	850	N/A	N/A	3 1/4	83	3 5/8	92
40	1000	N/A	N/A	3 1/8	79	3 5/8	92
46	1150	N/A	N/A	3	76	3 1/2	89
52	1300	N/A	N/A	N/A	N/A	3 1/2	89
58	1450	N/A	N/A	N/A	N/A	3 3/8	86

Shading indicates preferred spring option

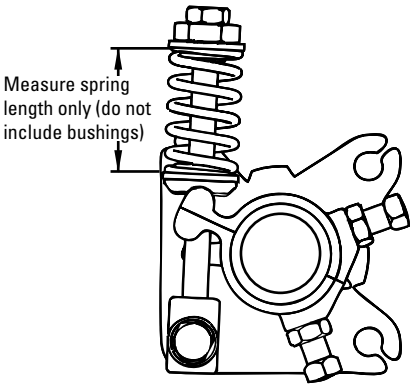

Pole Location Chart – Metric

A	X	Y	C
150	65	140	150
175	81	140	155
200	96	140	162
225	109	140	171
250	125	140	179
275	138	140	189
300	153	140	198
325	166	140	209
350	178	140	219
375	191	140	229
400	206	140	239
425	219	140	252
450	231	140	263
475	244	140	273
500	256	140	284
525	269	140	295
550	281	140	307

Specifications:

- Maximum Belt Speed ..... 500 FPM (2.5M/sec)
- Temperature Rating (ConShear, ConShear White) ..... -30°F to 180°F (-35°C to 82°C)
- Temperature Rating (ConShear High Temp) ..... Up to 275°F (135°C) with spikes to 325°F (164°C)
- Minimum Pulley Diameter ..... 6" (150mm)
- Blade Height ..... 4.5" (115mm)
- Usable Blade Wear Length ..... 2-3/8" (60mm)
- Blade Material (ConShear White) ..... Polyurethane (chemical resistant/food grade)
- Available for Belt Widths ..... 12" to 60" (300 to 1500mm)
- CEMA Cleaner Rating ..... Class 2

Replacement Parts List

EZP-LS Stainless Steel
Limited Space Precleaner with White ConShear™ LS Blade

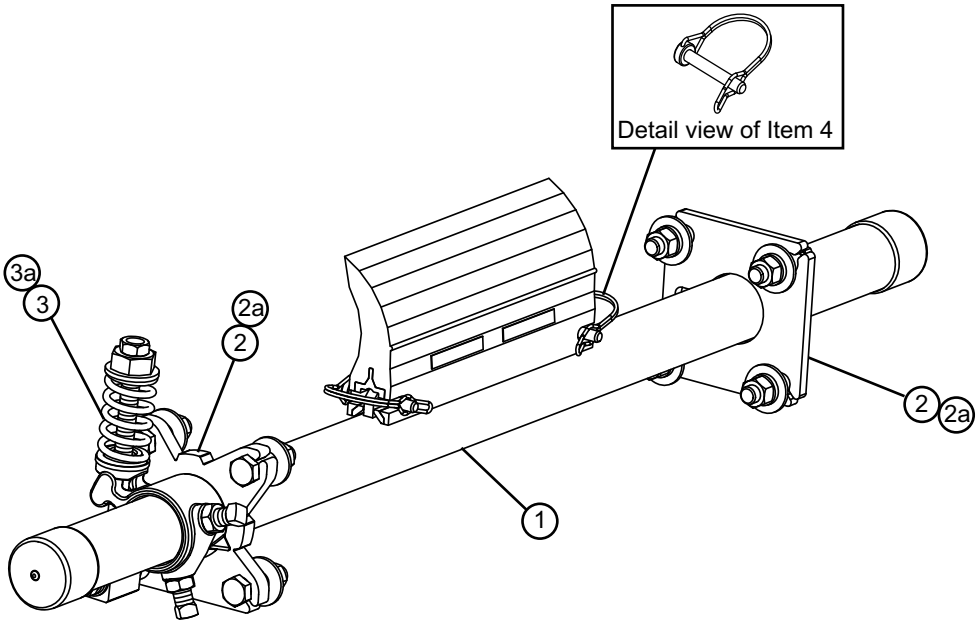

Replacement Parts

REF	DESCRIPTION	ORDERING NUMBER	ITEM CODE	WT. LBS.
1	12" (300mm) SS Pole	LSP12-S/S	77079	13.3
	18" (450mm) SS Pole	LSP18-S/S	77080	15.5
	24" (600mm) SS Pole	LSP24-S/S	77081	17.7
	30" (750mm) SS Pole	LSP30-S/S	77082	19.9
	36" (900mm) SS Pole	LSP36-S/S	77083	22.1
	42" (1050mm) SS Pole	LSP42-S/S	77084	24.3
	48" (1200mm) SS Pole	LSP48-S/S	77085	26.5
	54" (1350mm) SS Pole	LSP54-S/S	77086	28.7
	60" (1500mm) SS Pole	LSP60-S/S	77087	31.0
2	SS Mounting Plate Kit (10"-46"/250-1150mm)* (incl. 1 tensioner mounting plate and 1 pole mounting plate)	LSTMPK-S/S	78933	3.6
2a	SS Mounting Plate Kit (52"+/1300mm+)* (incl. 2 tensioner mounting plates)	LSTMPK2-S/S	78462	7.2
3	Tension Spring - Black (1 ea.) for blades 10-28" (250-700mm)	CTS-B-S/S	78387	.2
3a	Tension Spring - White (1 ea.) for blades 34" - 70" (850 - 1750mm)	LS-SW-S/S	78850	.3
4	SS LS Blade Pin (1 ea.)	LS-BP-S/S	77115	.1
-	SS LST Spring Tensioner* - Black incl. 1 ea. items 2 & 3 for blades 10"-28" (250 - 700mm)	LST-B-S/S	77124	7.5
-	SS LST Spring Tensioner* - White incl. 1 ea. items 2 & 3a for blades 34"- 46" (850 - 1150mm)	LST-W-S/S	77125	7.6
-	SS LST Spring Tensioner* - White (dual) incl. 1 ea. item 2a and 2 ea. item 3a for blades 52"- 70" (1300 - 1750mm)	LST-W-S/S-2	77126	15.2

*Hardware Included

Spring Tensioner Selection Chart

CLEANER BLADE WIDTH	77124 Black (single)	77125 White (single)	77126 White (dual)
Food Grade-LS 10" - 28" (250 - 700mm)	X		
Food Grade-LS 34" - 46" (850 - 1150mm)		X	
Food Grade-LS 52" - 70" (1300 - 1750mm)			X

For best results use Flexco Genuine Replacement Blades and Parts.

Product Ordering Information

MSP Standard-Duty Precleaner
Belt Width Minus 2" (50mm)

BELT WIDTH		BLADE WIDTH		ORDERING NUMBER	ITEM CODE	WT. LBS.
in.	mm	in.	mm			
24	600	22	550	MSP-224	75787	83.4
30	750	28	700	MSP-230	75788	89.6
36	900	34	850	MSP-236	75789	98.2
42	1050	40	1000	MSP-242	75790	106.0
48	1200	46	1150	MSP-248	75791	113.2
54	1350	52	1300	MSP-254	75792	120.0
60	1500	58	1450	MSP-260	75793	125.7
72	1800	70	1750	MSP-272	75794	140.2
84	2100	82	2050	MSP-284	76796	164.2

Lead time: 1 working day

Match blade width to belt's material path

Belt Width Minus 2" (50mm)

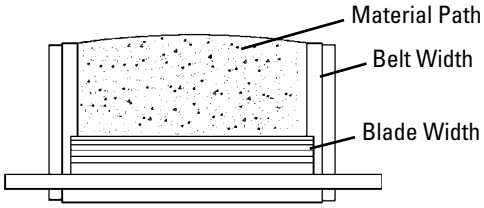

Belt Width Minus 8" (200mm)

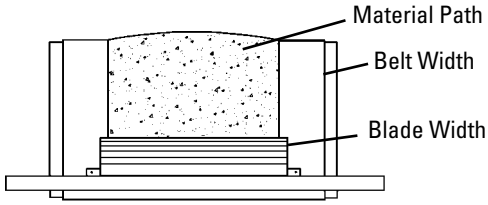

MSP Standard-Duty Precleaner
Belt Width Minus 8" (200mm)

BELT WIDTH		BLADE WIDTH		ORDERING NUMBER	ITEM CODE	WT. LBS.
in.	mm	in.	mm			
24	600	16	400	MSP-824	75795	80.6
30	750	22	550	MSP-830	75796	86.9
36	900	28	700	MSP-836	75797	95.5
42	1050	34	850	MSP-842	75798	103.2
48	1200	40	1000	MSP-848	75799	110.5
54	1350	46	1150	MSP-854	75800	117.2
60	1500	52	1300	MSP-860	75801	123.0
72	1800	64	1600	MSP-872	75802	134.7
84	2100	76	1900	MSP-884	76797	160.0

Lead time: 1 working day

Optional Mounting Kits

DESCRIPTION	ORDERING NUMBER	ITEM CODE	WT. LBS.
Optional Mounting Bar Kit *	MMBK	75830	19.5
Mounting Plate Kit * (2 plates)	MMPK	76537	140.0

*Hardware Included
Lead time: 1 working day

Product Notes:

- Recommended for standard-duty conveyor applications. For tougher belt applications see the MMP Medium-Duty Precleaner (41). For extreme, abusive applications see the MHP Heavy-Duty Precleaner (55) or the MHCP Heavy-Duty Cartridge Precleaner (69).
- Material Path Option: Fit the blade width to the belt's material path. The material path is typically the center 2/3 of the belt width. In most cases a blade size of belt width minus 8" (200mm) may be the best solution.
- Each cleaner pole is retrofittable for three blade sizes (belt width minus 2" (50mm), minus 8" (200mm) or minus 14" (350mm)).
- Pole Length: Belt width plus 54" (1350mm). For conveyors requiring longer pole lengths, go to the minus 8" (200mm) chart and select the cleaner one belt width size larger. This will provide a pole 6" (150mm) longer and a blade size of belt width minus 2" (50mm). For longer requirements see Installation Accessories – Pole Extender Kit (155).
- Visual Tension Check: No guesswork on blade tensioning. Measure the spring and adjust to specified length per blade width to restore optimal tensioning.
- To make cleaner installation easier and quicker, see Optional Mounting Kits (155).
- For replacement parts see MSP Parts List on page 39.

Product Ordering Information

MSP Ultra High-Temp Precleaner Belt Width Minus 2" (50mm)

BELT WIDTH		BLADE WIDTH		ORDERING NUMBER	ITEM CODE	WT. LBS.
in.	mm	in.	mm			
24	600	22	550	MSP-UHT224	91264	83.4
30	750	28	700	MSP-UHT230	91265	89.6
36	900	34	850	MSP-UHT236	91266	98.2
42	1050	40	1000	MSP-UHT242	91267	106.0
48	1200	46	1150	MSP-UHT248	91268	113.2
54	1350	52	1300	MSP-UHT254	91269	120.0
60	1500	58	1450	MSP-UHT260	91270	125.7
72	1800	70	1750	MSP-UHT272	91271	140.2

Lead time: 1 working day

MSP Ultra High-Temp Precleaner Belt Width Minus 8" (200mm)

BELT WIDTH		BLADE WIDTH		ORDERING NUMBER	ITEM CODE	WT. LBS.
in.	mm	in.	mm			
24	600	16	400	MSP-UHT824	91272	80.6
30	750	22	550	MSP-UHT830	91273	86.9
36	900	28	700	MSP-UHT836	91274	95.5
42	1050	34	850	MSP-UHT842	91275	103.2
48	1200	40	1000	MSP-UHT848	91276	110.5
54	1350	46	1150	MSP-UHT854	91277	117.2
60	1500	52	1300	MSP-UHT860	91278	123.0
72	1800	64	1600	MSP-UHT872	91279	134.7

Lead time: 1 working day

MSP Ultra High-Temp Precleaner Belt Width Minus 14" (350mm)

BELT WIDTH		BLADE WIDTH		ORDERING NUMBER	ITEM CODE	WT. LBS.
in.	mm	in.	mm			
42	1050	28	700	MSP-UHT1442	91280	100.4
48	1200	34	850	MSP-UHT1448	91281	107.8
54	1350	40	1000	MSP-UHT1454	91282	114.4
60	1500	46	1150	MSP-UHT1460	91283	120.3
72	1800	58	1450	MSP-UHT1472	91284	129.2

Lead time: 1 working day

Match blade width to belt's material path

Belt Width Minus 2" (50mm)

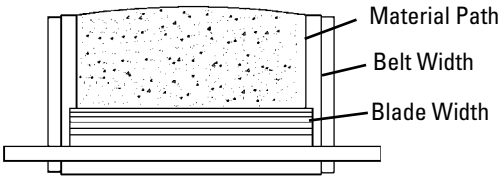

Belt Width Minus 8" (200mm)

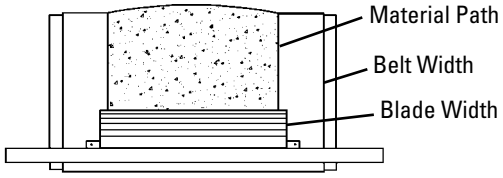

Belt Width Minus 14" (350mm)

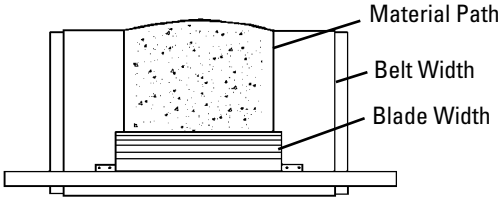

Product Notes:

- Material Path Option: Fit the blade width to the belt's material path. The material path is typically the center 2/3 of the belt width. In most cases a blade size of belt width minus 8" (200mm) may be the best solution.
- Each cleaner pole is retrofittable for three blade sizes (belt width minus 2" (50mm), minus 8" (200mm) or minus 14" (350mm)).
- Pole Length: Belt width plus 54" (1350mm). For conveyors requiring longer pole lengths, go to the minus 8" (200mm) chart and select the cleaner one belt width size larger. This will provide a pole 6" (150mm) longer and a blade size of belt width minus 2" (50mm).
- Visual Tension Check: No guesswork on blade tensioning. Measure the spring and adjust to specified length per blade width to restore optimal tensioning.
- For replacement parts see MSP Parts List on page 39.

Product Ordering Information

Stainless Steel MSP
Standard Mine-Duty Precleaner

Stainless Steel MSP Standard-Duty Precleaner Belt Width Minus 2" (50mm)

BELT WIDTH		BLADE WIDTH		ORDERING NUMBER	ITEM CODE	WT. LBS.
in.	mm	in.	mm			
24	600	22	550	MSP-224-S/S	77453	83.4
30	750	28	700	MSP-230-S/S	77454	89.6
36	900	34	850	MSP-236-S/S	77455	98.2
42	1050	40	1000	MSP-242-S/S	77456	106.0
48	1200	46	1150	MSP-248-S/S	77457	113.2
54	1350	52	1300	MSP-254-S/S	77458	120.0
60	1500	58	1450	MSP-260-S/S	77459	125.7
72	1800	70	1750	MSP-272-S/S	77460	140.2
84	2100	82	2050	MSP-284-S/S	77461	164.2

Lead time: 3 weeks

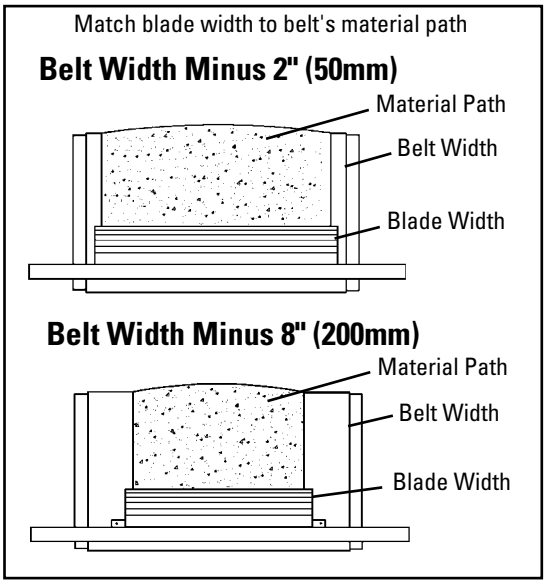

Stainless Steel MSP Standard-Duty Precleaner Belt Width Minus 8" (200mm)

BELT WIDTH		BLADE WIDTH		ORDERING NUMBER	ITEM CODE	WT. LBS.
in.	mm	in.	mm			
24	600	16	400	MSP-824-S/S	77462	80.6
30	750	22	550	MSP-830-S/S	77463	86.9
36	900	28	700	MSP-836-S/S	77464	95.5
42	1050	34	850	MSP-842-S/S	77465	103.2
48	1200	40	1000	MSP-848-S/S	77466	110.5
54	1350	46	1150	MSP-854-S/S	77467	117.2
60	1500	52	1300	MSP-860-S/S	77468	123.0
72	1800	64	1600	MSP-872-S/S	77470	134.7
84	2100	76	1900	MSP-884-S/S	77471	160.0

Lead time: 3 weeks

Product Notes:

- Recommended for standard-duty conveyor applications, but in corrosive environments.
- Material Path Option: Fit the blade width to the belt's material path. The material path is typically the center 2/3 of the belt width. In most cases a blade size of belt width minus 8" (200mm) may be the best solution.
- Each cleaner pole is retrofittable for three blade sizes (belt width minus 2" (50mm), minus 8" (200mm) or minus 14" (350mm)).
- Pole Length: Belt width plus 54" (1350mm). For conveyors requiring longer pole lengths, go to the minus 8" chart and select the cleaner one belt width size larger. This will provide a pole 6" (150mm) longer and a blade size of belt width minus 2" (50mm). For longer requirements see Installation Accessories – Pole Extender Kit (155).
- Visual Tension Check: No guesswork on blade tensioning. Measure the spring and adjust to specified length per blade width to restore optimal tensioning.
- To make cleaner installation easier and quicker, see Optional Mounting Kits (155).
- For replacement parts see MSP Stainless Parts List on page 40.

ConShear™ Replacement Blades

Replacement ConShear™ Blades

BLADE WIDTH		ORDERING NUMBER	ITEM CODE	WT. LBS.
in.	mm			
10	250	CRB10	75628	4.6
16	400	CRB16	75629	7.3
22	550	CRB22	75630	10.1
28	700	CRB28	75631	12.8
34	850	CRB34	75632	15.5
40	1000	CRB40	75633	18.3
46	1150	CRB46	75634	21.0
52	1300	CRB52	75635	23.8
58	1450	CRB58	75636	26.5
64	1600	CRB64	75775	29.2
70	1750	CRB70	75773	32.0
76	1900	CRB76	76940	34.7
82	2050	CRB82	76941	37.5

Other blade sizes available upon request.
Lead time: 1 working day

Replacement White ConShear™ Blades (Chemical Resistant/Food Grade) ‡

BLADE WIDTH		ORDERING NUMBER	ITEM CODE	WT. LBS.
in.	mm			
10	250	CRB-W10	78471	4.8
16	400	CRB-W16	78472	7.6
22	550	CRB-W22	78473	10.4
28	700	CRB-W28	78474	13.2
34	850	CRB-W34	78475	16.2
40	1000	CRB-W40	78476	19.1
46	1150	CRB-W46	78477	21.9
52	1300	CRB-W52	78478	24.8
58	1450	CRB-W58	78479	27.6

Lead time: 1 working day
‡ All ingredients used in the polyurethane formulation of this blade comply with the relevant requirements of 21 CFR (FDA Code of Federal Regulations) for use in repeated bulk dry food applications

Replacement High Temp ConShear™ Blades

(Color Identification: Yellow)

BLADE WIDTH		ORDERING NUMBER	ITEM CODE	WT. LBS.
in.	mm			
10	250	CRB-HT10	76593	4.8
16	400	CRB-HT16	76594	7.6
22	550	CRB-HT22	76595	10.4
28	700	CRB-HT28	76596	13.2
34	850	CRB-HT34	76597	16.2
40	1000	CRB-HT40	76598	19.1
46	1150	CRB-HT46	76599	21.9
52	1300	CRB-HT52	76600	24.8
58	1450	CRB-HT58	76601	27.6
64	1600	CRB-HT64	76602	30.5
70	1750	CRB-HT70	76603	33.4

Lead time: 1 working day

Replacement Ultra High-Temp ConShear™ Blades

(Color Identification: Red)

BLADE WIDTH		ORDERING NUMBER	ITEM CODE	WT. LBS.
in.	mm			
10	250	CRB-UHT10	91253	4.6
16	400	CRB-UHT16	91254	7.3
22	550	CRB-UHT22	91255	10.1
28	700	CRB-UHT28	91256	12.8
34	850	CRB-UHT34	91257	15.5
40	1000	CRB-UHT40	91258	18.3
46	1150	CRB-UHT46	91259	21.0
52	1300	CRB-UHT52	91260	23.8
58	1450	CRB-UHT58	91261	26.5
64	1600	CRB-UHT64	91262	29.2
70	1750	CRB-UHT70	91263	32.0

Lead time: 1 working day

Blade Width Selection

BELT WIDTH		BELT WIDTH - 2" (50mm)		BELT WIDTH - 8" (200mm)		BELT WIDTH - 14" (350mm)	
in.	mm	in.	mm	in.	mm	in.	mm
24	600	22	550	16	400	10	250
30	750	28	700	22	550	16	400
36	900	34	850	28	700	22	550
42	1050	40	1000	34	850	28	700
48	1200	46	1150	40	1000	34	850
54	1350	52	1300	46	1150	40	1000
60	1500	58	1450	52	1300	46	1150
72	1800	70	1750	64	1600	58	1450
84	2100	82	2050	76	1900	70	1750

Product Notes:

- A molded-in wear line indicates when the blade is worn out and needs to be replaced.
- Faceted blade profile: Renews its cleaning edge as the blade wears.
- ConShear™ blades are made of a special long-wearing polyurethane.
- Quick blade replacement: Pull one pin, remove the old blade and slide the new one in.

Specifications & Guidelines

Pole Length Specifications*

CLEANER SIZE		POLE LENGTH		MAXIMUM CONVEYOR SPAN	
in.	mm	in.	mm	in.	mm
24	600	78	1950	68	1700
30	750	84	2100	74	1850
36	900	90	2250	80	2000
42	1050	96	2400	86	2150
48	1200	102	2550	92	2300
54	1350	108	2700	98	2450
60	1500	114	2850	104	2600
72	1800	126	3150	116	2900
84	2100	138	3450	128	3200

* For special extra long pole length requirements a Pole Extender Kit (#76024) is available that provides 30" (750mm) of extended pole length. See 155.
Pole Diameter – 2-7/8" (73mm)

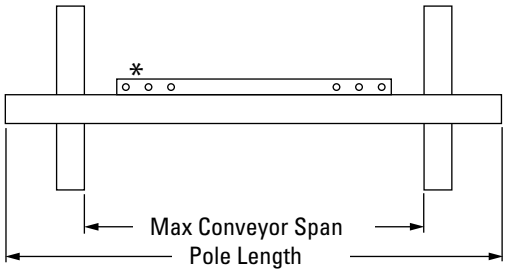

*Each pole size can be used with a blade size either belt width minus 2" (50mm), belt width minus 8" (200mm), or belt width minus 14" (350mm).

Clearance Guidelines for Installation

HORIZONTAL CLEARANCE REQUIRED		VERTICAL CLEARANCE REQUIRED	
in.	mm	in.	mm
4	100	10	250

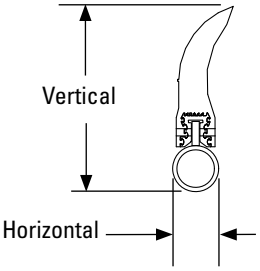

Pole Location Specs

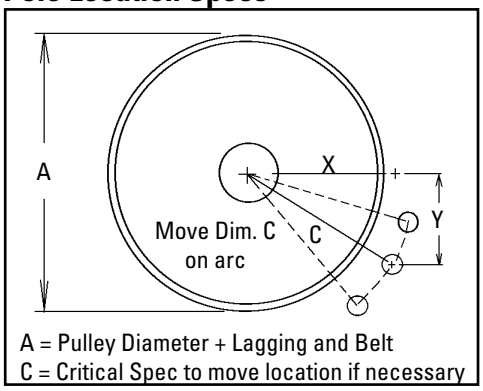

Spring Length Chart

BLADE WIDTH		PURPLE SPRING		WHITE SPRING		GOLD SPRING	
in.	mm	in.	mm	in.	mm	in.	mm
16	400	5 1/4	133	6 1/4	159	N/A	N/A
22	550	4 3/4	121	6 1/8	156	N/A	N/A
28	700	4 1/8	105	5 7/8	149	N/A	N/A
34	850	N/A	N/A	5 3/4	146	6 1/8	156
40	1000	N/A	N/A	5 5/8	143	6 1/8	156
46	1150	N/A	N/A	5 1/2	140	6	152
52	1300	N/A	N/A	5 3/8	137	5 7/8	149
58	1450	N/A	N/A	5 1/8	130	5 7/8	149
64	1600	N/A	N/A	5	127	5 3/4	146
70	1750	N/A	N/A	4 7/8	124	5 5/8	143
76	1900	N/A	N/A	N/A	N/A	5 5/8	143
82	2050	N/A	N/A	N/A	N/A	5 1/2	140
88	2200	N/A	N/A	N/A	N/A	5 1/4	133
94	2350	N/A	N/A	N/A	N/A	5 1/8	130
100	2500	N/A	N/A	N/A	N/A	5 1/8	130
106	2650	N/A	N/A	N/A	N/A	5	127

Shading indicates preferred spring option

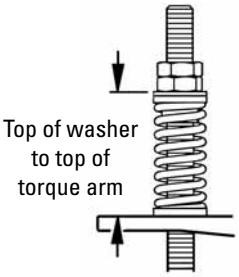

Pole Location Chart IMPERIAL

A	X	Y	C
16"	7 1/8"	9"	11 1/2"
17"	7 7/8"	9"	12"
18"	8 1/4"	9"	12 1/4"
19"	9"	9"	12 3/4"
20"	9 3/8"	9"	13"
21"	10"	9"	13 1/2"
22"	10 3/4"	9"	14"
23"	11 3/8"	9"	14 1/2"
24"	12"	9"	15"
25"	12 5/8"	9"	15 1/2"
26"	13 1/4"	9"	16"
27"	13 7/8"	9"	16 1/2"
28"	14 3/8"	9"	17"
29"	15"	9"	17 1/2"
30"	15 5/8"	9"	18"
31"	16 1/8"	9"	18 1/2"
32"	16 3/4"	9"	19"
33"	17 1/4"	9"	19 1/2"
34"	17 7/8"	9"	20"
35"	18 3/8"	9"	20 1/2"
36"	19"	9"	21"
37"	19 1/2"	9"	21 1/2"
38"	20	9"	22"
39"	20 5/8"	9"	22 1/2"
40"	21 1/8"	9"	23"
41"	21 3/4"	9"	23 1/2"
42"	22 1/4"	9"	24"

Pole Location Chart METRIC

A	X	Y	C
450	204	230	308
475	222	230	320
500	232	230	326
525	248	230	338
550	266	230	352
575	282	230	364
600	298	230	376
625	312	230	388
650	330	230	402
675	344	230	414
700	358	230	426
725	372	230	438
750	390	230	452
775	402	230	464
800	416	230	476
825	430	230	488
850	446	230	502
875	460	230	514
900	474	230	526
925	486	230	538
950	502	230	552
975	514	230	564
1000	528	230	576
1025	542	230	588
1050	556	230	602

Specifications:

- Maximum Belt Speed ..... 700 FPM (3.5M/sec)
- Temperature Rating (ConShear, ConShear White) ..... -30°F to 180°F (-35°C to 82°C)
- Temperature Rating (ConShear High Temp) ..... Up to 275°F (135°C) with spikes to 325°F (164°C)
- Temperature Rating (ConShear Ultra High-Temp) ..... Up to 400°F (200°C) with spikes to 450°F (232°C)
- Minimum Pulley Diameter ..... 16" (400mm)
- Blade Height ..... 7-1/4" (185mm)
- Usable Blade Wear Length ..... 4" (100mm)
- Blade Material ..... Polyurethane (proprietary blend for abrasion resistance and long wear)
- Available for Belt Widths ..... 24" to 84" (600 to 2100mm)
- CEMA Cleaner Rating ..... Class 3

Replacement Parts List

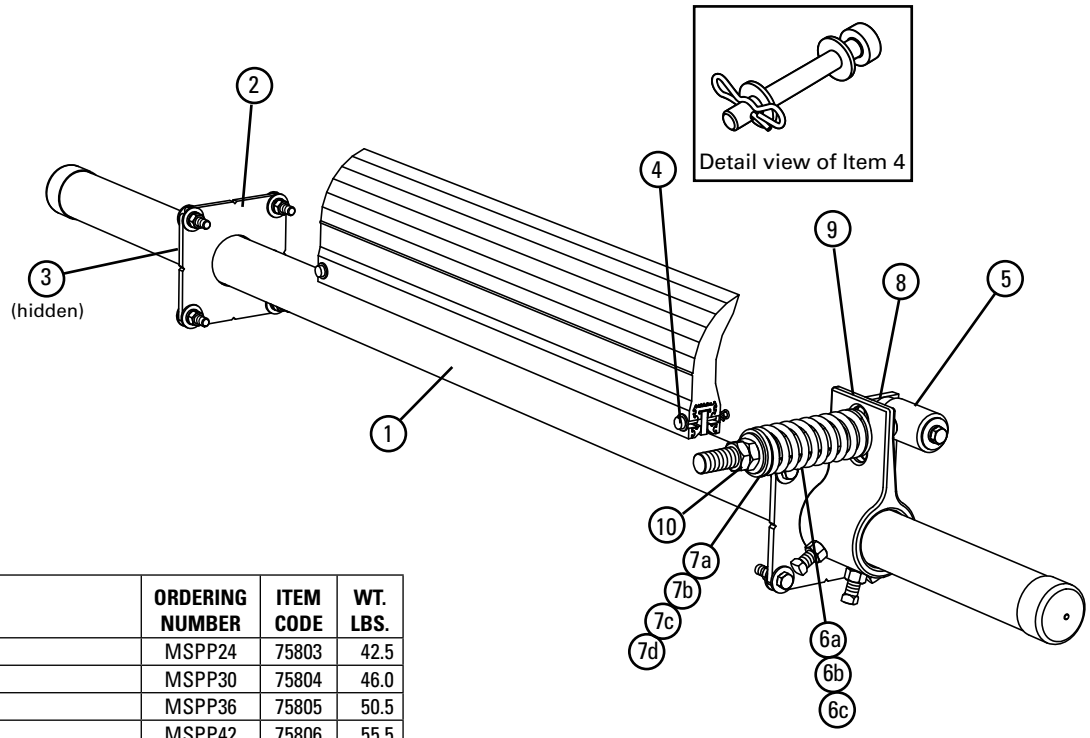

Replacement Parts

REF	DESCRIPTION	ORDERING NUMBER	ITEM CODE	WT. LBS.
1	24" (600mm) Pole	MSPP24	75803	42.5
	30" (750mm) Pole	MSPP30	75804	46.0
	36" (900mm) Pole	MSPP36	75805	50.5
	42" (1050mm) Pole	MSPP42	75806	55.5
	48" (1200mm) Pole	MSPP48	75807	60.0
	54" (1350mm) Pole	MSPP54	75808	64.0
	60" (1500mm) Pole	MSPP60	75809	67.0
	72" (1800mm) Pole	MSPP72	75810	76.0
	84" (2100mm) Pole	MSPP84	76807	88.6
2	Mounting Plate Kit* (2 ea.)	MSPMPK	75811	8.3
3	Pole Lock* (1 ea.)	MSPPL	75816	1.9
4	Blade Pin Kit* (1 ea.)	MSPBPK	75831	0.1
5	Pivot Arm Kit* (1 ea.)	QMTPAK	76096	4.3
6a	Tension Spring - Purple (1 ea.) for blades 16" - 28" (400 - 700mm)	QMTS-P	75845	0.6
6b	Tension Spring - White (1 ea.) for blades 34" - 70" (850 - 1750mm)	PSTS-W	75898	1.7
6c	Tension Spring - Gold (1 ea.) for blades 76" - 82" (1900 - 2050mm)	QMTS-G	76484	2.5
7a	Bushing Kit - Purple (2 ea.)	QMTBK-P	76097	0.1
7b	Bushing Kit - White (2 ea.)	QMTBK-W	76098	0.2
7c	Bushing Kit - Gold (2 ea.)	QMTBK-G	76540	0.3
7d	QMT Bushing Kit - Ultra High-Temp (2 ea.)	QMT-ATEX	90435	0.2
8	Pivot Shaft Bracket Kit* (1 ea.)	QMTPSBK	76099	4.3
9	Torsion Arm Kit* (1 ea.)	PSTA	75896	11.4
10	Jam Nut Kit QMT Tensioner	JNK-C	79893	0.3
-	QMT Spring Tensioner* - Purple (incl. 1 ea. Items 5, 6a, 7a, 8, & 9) for blades 16" - 28" (400 - 700mm)	QMT-P	76074	20.4
-	QMT Spring Tensioner* - White (incl. 1 ea. Items 5, 6b, 7b, 8, & 9) for blades 34" - 70" (850 - 1750mm)	QMT-W	76075	21.8
-	QMT Spring Tensioner* - Gold (incl. 1 ea. Items 5, 6c, 7c, 8, & 9) for blades 76" - 82" (1900 - 2050mm)	QMT-G	76483	23.2
-	QMT Ultra High-Temp Tensioner* - Purple (incl. 1 ea. Items 5, 6a, 7, 8, & 9) for blade widths 16" - 28" (400 - 700mm)	QMT-A-P	91285	20.4
-	QMT Ultra High-Temp Tensioner* - White (incl. 1 ea. Items 5, 6b, 7, 8, & 9) for blades 34" - 70" (850 - 1750mm)	QMT-A-W	91286	21.8

*Hardware Included
Lead Time: 1 working day

Spring Tensioner Selection Chart

CLEANER BLADE WIDTH	76074 QMT-P	76075 QMT-W	76483 QMT-G
ConShear 16" - 28" (400 - 700mm)	X		
ConShear 34" - 70" (850 - 1750mm)		X	
ConShear 76" - 82" (1900 - 2050mm)			X

Spring Tensioner Selection Chart MSP UHT Only

Cleaner Blade Width	91285 QMT-A-P	91286 QMT-A-W
UHT ConShear 16"-28" (400-700mm)	X	
UHT ConShear 34"-70" (850-1750mm)		X

Replacement Parts List

Stainless Steel MSP
Standard Mine-Duty Precleaner

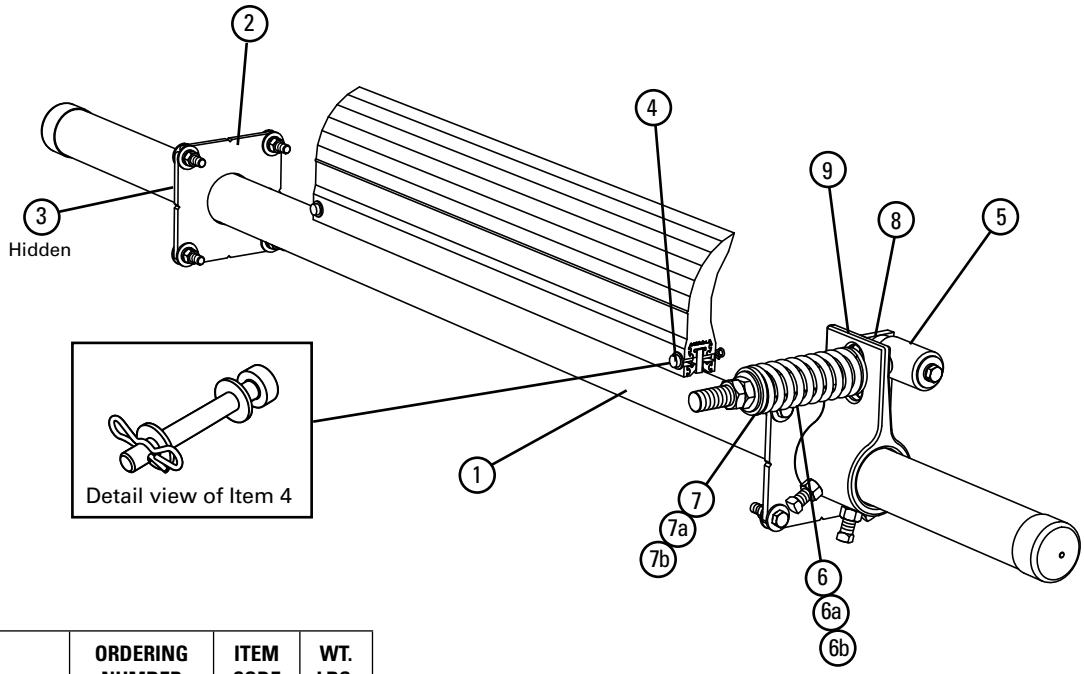

Replacement Parts

REF	DESCRIPTION	ORDERING NUMBER	ITEM CODE	WT. LBS.
1	24" (600mm) SS Pole	MSPP24-S/S	77472	42.5
	30" (750mm) SS Pole	MSPP30-S/S	77473	46.0
	36" (900mm) SS Pole	MSPP36-S/S	77474	50.5
	42" (1050mm) SS Pole	MSPP42-S/S	77475	55.5
	48" (1200mm) SS Pole	MSPP48-S/S	77476	60.0
	54" (1350mm) SS Pole	MSPP54-S/S	77477	64.0
	60" (1500mm) SS Pole	MSPP60-S/S	77478	67.0
	72" (1800mm) SS Pole	MSPP72-S/S	77479	76.0
	84" (2100mm) SS Pole	MSPP84-S/S	77480	88.6
2	SS Mounting Plate Kit* (2 ea.)	MSPMPK-S/S	77582	8.3
3	SS Pole Lock* (1 ea.)	MSPPL-S/S	77524	1.9
4	SS Blade Pin Kit* (1 ea.)	MSPBPK-S/S	77583	0.1
5	SS Pivot Arm Kit* (1 ea.)	QMTPAK-S/S	77587	4.3
6	SS Tension Spring - Purple (1 ea.) for blades 16" - 28" (400 - 700mm)	QMTS-P-S/S	77450	0.6
6a	SS Tension Spring - White (1 ea.) for blades 34" - 70" (850 - 1750mm)	QMTS-W-S/S	77451	1.7
6b	SS Tension Spring - Gold (1 ea.) for blades 76" - 82" (1900 - 2050mm)	QMTS-G-S/S	77452	2.5
7	Bushing Kit - Purple (2 ea.)	QMTBK-P	76097	0.1
7a	Bushing Kit - White (2 ea.)	QMTBK-W	76098	0.2
7b	Bushing Kit - Gold (2 ea.)	QMTBK-G	76540	0.3
8	SS Pivot Shaft Bracket Kit* (1 ea.)	QMTPSBK-S/S	77588	4.3
9	SS Torsion Arm Kit* (1 ea.)	PSTA-S/S	77442	11.4
-	SS QMT Spring Tensioner* - Purple (incl. 1 ea. Items 5, 6, 7, 8, & 9) for blades 16" - 28" (400 - 700mm)	QMT-P-S/S	77584	20.4
-	SS QMT Spring Tensioner* - White (incl. 1 ea. Items 5, 6a, 7a, 8, & 9) for blades 34" - 70" (850 - 1750mm)	QMT-W-S/S	77585	21.8
-	SS QMT Spring Tensioner* - Gold (incl. 1 ea. Items 5, 6b, 7b, 8, & 9) for blades 76" - 82" (1900 - 2050mm)	QMT-G-S/S	77586	23.2

*Hardware Included
Lead Time: 1 working day

Spring Tensioner Selection Chart

CLEANER BLADE WIDTH	77584 QMT-P-S/S	77585 QMT-W-S/S	77586 QMT-G-S/S
ConShear 16" - 28" (400 - 700mm)	X		
ConShear 34" - 70" (850 - 1750mm)		X	
ConShear 76" - 82" (1900 - 2050mm)			X

Shaded items are made to order.
Lead time: 3 weeks

Product Ordering Information

MMP
Medium Mine-Duty Precleaner

MMP Medium-Duty Precleaner
Belt Width Minus 6" (150mm)

BELT WIDTH		BLADE WIDTH		ORDERING NUMBER	ITEM CODE	WT. LBS.
in.	mm	in.	mm			
24	600	18	450	MMP-624	76450	159.4
30	750	24	600	MMP-630	76451	175.0
36	900	30	750	MMP-636	76452	190.6
42	1050	36	900	MMP-642	76453	206.2
48	1200	42	1050	MMP-648	76454	221.8
54	1350	48	1200	MMP-654	76455	237.4
60	1500	54	1350	MMP-660	76456	253.0
72	1800	66	1650	MMP-672	76457	291.1
84	2100	78	1950	MMP-684	76798	344.1
96	2400	90	2250	MMP-696	79033	397.1
108	2700	102	2550	MMP-6108	90147	450.1
120	3000	114	2850	MMP-6120	90148	503.1

MMP Medium-Duty Precleaner
Belt Width Minus 12" (300mm)

BELT WIDTH		BLADE WIDTH		ORDERING NUMBER	ITEM CODE	WT. LBS.
in.	mm	in.	mm			
30	750	18	450	MMP-1230	76551	168.0
36	900	24	600	MMP-1236	76552	183.6
42	1050	30	750	MMP-1242	76553	199.2
48	1200	36	900	MMP-1248	76554	214.8
54	1350	42	1050	MMP-1254	76555	230.4
60	1500	48	1200	MMP-1260	76556	246.0
72	1800	60	1500	MMP-1272	76557	284.1
84	2100	72	1800	MMP-1284	76799	337.1
96	2400	84	2100	MMP-1296	79034	390.1
108	2700	96	2400	MMP-12108	90149	443.1
120	3000	108	2700	MMP-12120	90150	496.1

MMP Medium-Duty Precleaner
Belt Width Minus 18" (450mm)

BELT WIDTH		BLADE WIDTH		ORDERING NUMBER	ITEM CODE	WT. LBS.
in.	mm	in.	mm			
36	900	18	450	MMP-1836	77575	176.6
42	1050	24	600	MMP-1842	77576	192.2
48	1200	30	750	MMP-1848	77577	207.8
54	1350	36	900	MMP-1854	77578	223.4
60	1500	42	1050	MMP-1860	77579	239.0
72	1800	54	1350	MMP-1872	77580	277.1
84	2100	66	1650	MMP-1884	77581	330.1
96	2400	78	1950	MMP-1896	79040	383.1
108	2700	90	2250	MMP-18108	91926	436.1
120	3000	102	2550	MMP-18120	91927	489.1

MMP Medium-Duty Precleaner
Belt Width Minus 24" (450mm)

BELT WIDTH		BLADE WIDTH		ORDERING NUMBER	ITEM CODE	WT. LBS.
in.	mm	in.	mm			
42	1050	18	450	MMP-2442	91928	185.2
48	1200	24	600	MMP-2448	91929	200.8
54	1350	30	750	MMP-2454	91930	216.4
60	1500	36	900	MMP-2460	91931	232.0
72	1800	48	1200	MMP-2472	91932	270.1
84	2100	60	1500	MMP-2484	91933	323.1
96	2400	72	1800	MMP-2496	91934	376.1
108	2700	84	2100	MMP-24108	91935	429.1
120	3000	96	2400	MMP-24120	91936	482.1

Standard Lead time: 1 working day

Shaded items are made to order.
Lead time: 3 weeks

Optional Mounting Kits

DESCRIPTION	ORDERING NUMBER	ITEM CODE	WT. LBS.
Optional Mounting Bar Kit *	MMBK	75830	19.5
Mounting Plate Kit * (2 plates)	MMPK	76537	140.0

*Hardware Included
Lead time: 1 working day

Product Notes:

- Recommended for medium-duty conveyor applications. For abusive applications see the MHCP Heavy-Duty Cartridge Precleaner (69).
- Material Path Option: Fit the blade width to the belt's material path. The material path is typically the center 2/3 of the belt width. In most cases a blade size of belt width minus 6" (150mm) may be the best solution.
- Each cleaner pole is retrofittable in blade sizes down to 18" (450mm) in 6" (150mm) increments.
- Pole Length: Belt width plus 54" (1350mm). For longer requirements see Installation Accessories – Pole Extender Kit (155).
- Visual Tension Check: No guesswork on blade tensioning. Measure the spring and adjust to specified length per blade width to restore optimal tensioning.
- To make cleaner installation easier and quicker, see Optional Mounting Kits (155).

Product Ordering Information

Stainless Steel MMP
Medium Mine-Duty Precleaner

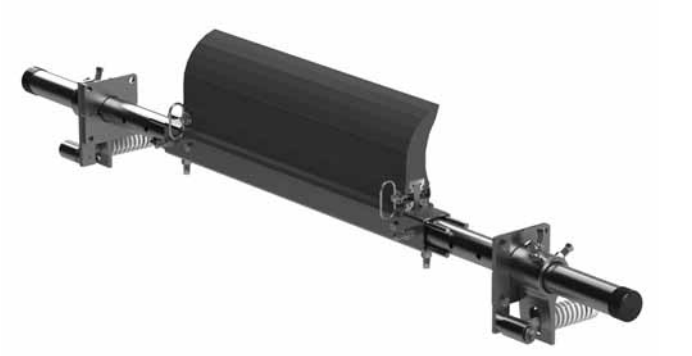

Stainless Steel MMP Medium-Duty Precleaner
Belt Width Minus 6" (150mm)

BELT WIDTH		BLADE WIDTH		ORDERING NUMBER	ITEM CODE	WT. LBS.
in.	mm	in.	mm			
24	600	18	450	MMP-624-S/S	77424	159.4
30	750	24	600	MMP-630-S/S	77425	175.0
36	900	30	750	MMP-636-S/S	77426	190.6
42	1050	36	900	MMP-642-S/S	77427	206.2
48	1200	42	1050	MMP-648-S/S	77428	221.8
54	1350	48	1200	MMP-654-S/S	77429	237.4
60	1500	54	1350	MMP-660-S/S	77430	253.0
72	1800	66	1650	MMP-672-S/S	77431	291.1
84	2100	78	1950	MMP-684-S/S	77432	344.1
96	2400	90	2100	MMP-696-S/S	79035	397.1

Lead time: 3 weeks

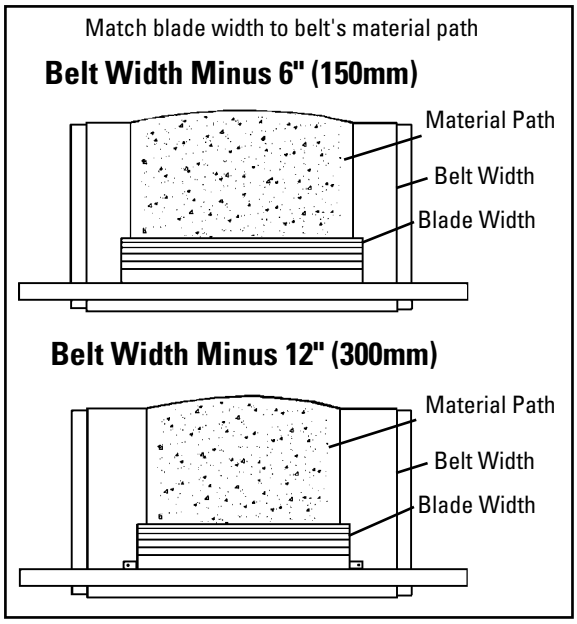

Stainless Steel MMP
Medium-Duty Precleaner
Belt Width Minus 12" (300mm)

BELT WIDTH		BLADE WIDTH		ORDERING NUMBER	ITEM CODE	WT. LBS.
in.	mm	in.	mm			
30	750	18	450	MMP-1230-S/S	77433	168.0
36	900	24	600	MMP-1236-S/S	77434	183.6
42	1050	30	750	MMP-1242-S/S	77435	199.2
48	1200	36	900	MMP-1248-S/S	77436	214.8
54	1350	42	1050	MMP-1254-S/S	77437	230.4
60	1500	48	1200	MMP-1260-S/S	77438	246.0
72	1800	60	1500	MMP-1272-S/S	77439	284.1
84	2100	72	1800	MMP-1284-S/S	77440	337.1
96	2400	84	2100	MMP-1296-S/S	79036	390.1

Lead time: 3 weeks

Shaded items are made to order.
Lead time: 3 weeks

Product Notes:

- Recommended for medium-duty conveyor applications, but in corrosive environments.
- Material Path Option: Fit the blade width to the belt's material path. The material path is typically the center 2/3 of the belt width. In most cases a blade size of belt width minus 6" (150mm) may be the best solution.
- Each cleaner pole is retrofittable for three blade sizes (belt width minus 6" (150mm), minus 12" (300mm) or minus 18" (450mm)).
- Pole Length: Belt width plus 54" (1350mm). For longer requirements see Installation Accessories – Pole Extender Kit (155).
- Visual Tension Check: No guesswork on blade tensioning. Measure the spring and adjust to specified length per blade width to restore optimal tensioning.
- To make cleaner installation easier and quicker, see Optional Mounting Kits (155).

Product Ordering Information

MMP
Medium Mine-Duty Precleaner with Portable Air Tensioner

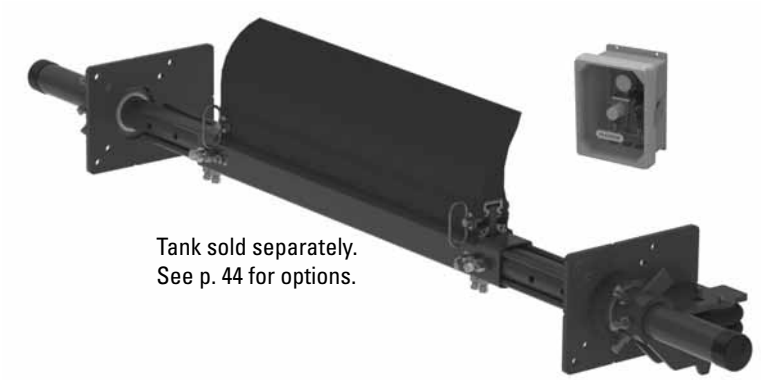

Tank sold separately.
See p. 44 for options.

Standard Lead time: 1 working day

Shaded items are made to order.
Lead time: 3 weeks

MMP Medium-Duty Precleaner with PAT Belt Width Minus 6" (150mm)

BELT WIDTH		BLADE WIDTH		ORDERING NUMBER	ITEM CODE	WT. LBS.
in.	mm	in.	mm			
24	600	18	450	MMP-624P	78706	202.0
30	750	24	600	MMP-630P	78707	217.6
36	900	30	750	MMP-636P	78708	233.2
42	1050	36	900	MMP-642P	78709	248.8
48	1200	42	1050	MMP-648P	78710	264.4
54	1350	48	1200	MMP-654P	78711	280.0
60	1500	54	1350	MMP-660P	78712	295.6
72	1800	66	1650	MMP-672P	78713	333.7
84	2100	78	1950	MMP-684P	78714	386.7
96	2400	90	2250	MMP-696P	79037	439.7
108	2700	102	2550	MMP-6108P	90389	492.7
120	3000	114	2850	MMP-6120P	90390	545.7

MMP Medium-Duty Precleaner with PAT Belt Width Minus 12" (300mm)

BELT WIDTH		BLADE WIDTH		ORDERING NUMBER	ITEM CODE	WT. LBS.
in.	mm	in.	mm			
30	750	18	450	MMP-1230P	78715	210.6
36	900	24	600	MMP-1236P	78716	226.2
42	1050	30	750	MMP-1242P	78717	241.8
48	1200	36	900	MMP-1248P	78718	257.4
54	1350	42	1050	MMP-1254P	78719	273.0
60	1500	48	1200	MMP-1260P	78720	288.6
72	1800	60	1500	MMP-1272P	78721	326.7
84	2100	72	1800	MMP-1284P	78722	379.7
96	2400	84	2100	MMP-1296P	79038	432.7
108	2700	96	2400	MMP-12108P	90391	485.7
120	3000	108	2700	MMP-12120P	90392	538.7

MMP Medium-Duty Precleaner with PAT Belt Width Minus 18" (450mm)

BELT WIDTH		BLADE WIDTH		ORDERING NUMBER	ITEM CODE	WT. LBS.
in.	mm	in.	mm			
36	900	18	450	MMP-1836P	91995	219.2
42	1050	24	600	MMP-1842P	91996	234.4
48	1200	30	750	MMP-1848P	91997	250.4
54	1350	36	900	MMP-1854P	91998	266.0
60	1500	42	1050	MMP-1860P	91999	281.6
72	1800	54	1350	MMP-1872P	92000	319.7
84	2100	66	1650	MMP-1884P	92001	372.7
96	2400	78	1950	MMP-1896P	92002	425.7
108	2700	90	2250	MMP-18108P	92003	478.7
120	3000	102	2550	MMP-18120P	92004	531.7

MMP Medium-Duty Precleaner with PAT Belt Width Minus 24" (600mm)

BELT WIDTH		BLADE WIDTH		ORDERING NUMBER	ITEM CODE	WT. LBS.
in.	mm	in.	mm			
42	1050	18	450	MMP-2442P	92005	227.4
48	1200	24	600	MMP-2448P	92006	243.4
54	1350	30	750	MMP-2454P	92007	259.0
60	1500	36	900	MMP-2460P	92008	274.6
72	1800	48	1200	MMP-2472P	92009	312.7
84	2100	60	1500	MMP-2484P	92010	365.7
96	2400	72	1800	MMP-2496P	92011	418.7
108	2700	84	2100	MMP-24108P	92012	471.7
120	3000	96	2400	MMP-24120P	92013	524.7

Product Notes:

- Recommended for medium-duty conveyor applications. For abusive applications see MHCP Heavy-Duty Cartridge Precleaner (69).
- Material Path Option: Fit the blade width to the belt's material path. The material path is typically the center 2/3 of the belt width. In most cases a blade size of belt width minus 6" (150mm) may be the best solution.
- Each cleaner pole is retrofittable for blade sizes down to 18" (450mm) in 6" (150mm) increments.
- Pole Length: Belt width plus 54" (1350mm). For longer requirements see Installation Accessories – Pole Extender Kit (155).
- Portable Air Tensioner used for constant, automatic tension throughout the life of the blades. Can be used with site-available air lines or with the add-on Air Tank.
- To make cleaner installation easier and quicker, see Optional Mounting Kits (155).

Product Ordering Information

Air Tanks

ORDERING NUMBER	ITEM CODE	WT. LBS.
PAT1	78684	13.0
PAT2	78685	13.0

PAT1 (Single)

PAT2 (Dual)

Replacement Parts List

REF	DESCRIPTION	ORDERING NUMBER	ITEM CODE	WT. LBS.
1	Tank Label Kit	PATLK	78791	0.1
2	Tank Hose Kit (incl. 1 ea. 10' hose and 1' poly spiral wrap, 2 hose clamps)	PATHK	78794	1.5

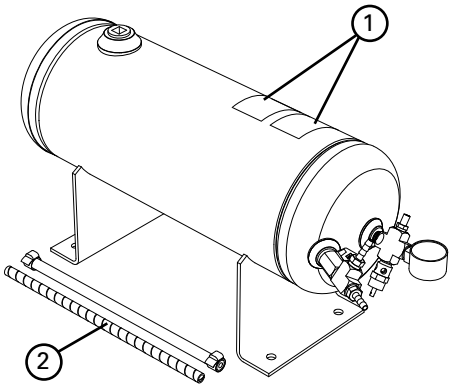

Product Notes:

- For use with PAT cleaner assemblies and PAT control box.
- Single for applications with one cleaner, double for applications with two cleaners.
- 150# pop-off valve for safe pressurizing/charging of Air Tank.
- ASME construction.

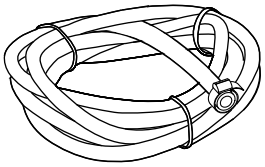

Air Line Connection for Site-Accessible Air

ORDERING NUMBER	ITEM CODE	WT. LBS.
PATHK*	78794	1.5

* incl. 10' hose, 1' poly spiral wrap, 2 hose clamps

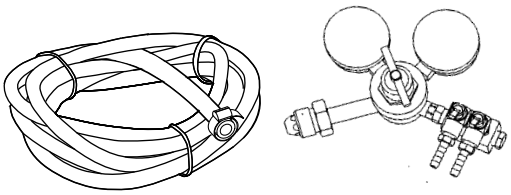

Nitrogen Tank Connection for Site-Provided Nitrogen Tank

ORDERING NUMBER	ITEM CODE	WT. LBS.
PANK*	78799	5.0

* incl. Nitrogen Regulator, 10' hose, 2 hose clamps

TuffShear™ Replacement Blades

NOTE: TuffShear replacement blades will retrofit to Martin® QC® XHD Cleaners.

Replacement TuffShear™ Blades

BLADE WIDTH		ORDERING NUMBER	ITEM CODE	WT. LBS.
in.	mm			
18	450	TRB18	76485	21.0
24	600	TRB24	76486	28.0
30	750	TRB30	76487	35.0
36	900	TRB36	76488	42.0
42	1050	TRB42	76489	49.0
48	1200	TRB48	76490	56.0
54	1350	TRB54	76491	63.0
60	1500	TRB60	76492	70.0
66	1650	TRB66	76493	77.0
72	1800	TRB72	76494	84.0
78	1950	TRB78	76697	91.0
84	2100	TRB84	77047	98.0
90	2250	TRB90	77048	105.0
96	2400	TRB96	90358	112.0
102	2550	TRB102	90359	119.0
108	2700	TRB108	90360	126.0
114	2850	TRB114	90361	133.0

Other blade sizes available upon request.
Lead time: 1 working day

Replacement TuffShear™ High-Temp Blades

BLADE WIDTH		ORDERING NUMBER	ITEM CODE	WT. LBS.
in.	mm			
18	450	TRB-HT18	78754	21.0
24	600	TRB-HT24	78755	28.0
30	750	TRB-HT30	78756	35.0
36	900	TRB-HT36	78757	42.0
42	1050	TRB-HT42	78758	49.0
48	1200	TRB-HT48	78759	56.0
54	1350	TRB-HT54	78760	63.0
60	1500	TRB-HT60	78761	70.0
66	1650	TRB-HT66	78762	77.0
72	1800	TRB-HT72	78763	84.0
78	1950	TRB-HT78	78764	91.0
84	2100	TRB-HT84	78765	98.0
90	2250	TRB-HT90	78766	105.0
96	2400	TRB-HT96	92698	112.0
102	2550	TRB-HT102	92704	119.0
108	2700	TRB-HT108	92710	126.0
114	2850	TRB-HT114	92716	133.0

Other blade sizes available upon request.
Lead time: 1 working day

Replacement TuffShear™ Ultra High-Temp Blades

BLADE WIDTH		ORDERING NUMBER	ITEM CODE	WT. LBS.
in.	mm			
18	450	TRB-UHT18	91865	21.0
24	600	TRB-UHT24	91866	28.0
30	750	TRB-UHT30	91867	35.0
36	900	TRB-UHT36	91868	42.0
42	1050	TRB-UHT42	91869	49.0
48	1200	TRB-UHT48	91870	56.0
54	1350	TRB-UHT54	91871	63.0
60	1500	TRB-UHT60	91872	70.0
66	1650	TRB-UHT66	91873	77.0
72	1800	TRB-UHT72	91874	84.0
78	1950	TRB-UHT78	91875	91.0
84	2100	TRB-UHT84	91876	98.0
90	2250	TRB-UHT90	91877	105.0
96	2400	TRB-UHT96	92782	112.0
102	2550	TRB-UHT102	92788	119.0
108	2700	TRB-UHT108	92794	126.0
114	2850	TRB-UHT114	92800	133.0

Lead time: 1 working day

Product Notes:

- A molded-in wear line indicates when the blade is worn out and needs to be replaced.
- Faceted blade profile: Renews its cleaning edge as the blade wears.
- TuffShear™ blades are made of a special long-wearing polyurethane.
- Quick blade replacement: Pull one pin, remove the old blade and slide the new one in.

Martin® and QC® #1 are registered trademarks of Martin Engineering, Neponset, IL.

Specifications & Guidelines

Pole Length Specifications*

CLEANER SIZE		MAX OVERALL POLE LENGTH		CENTER POLE LENGTH		MAXIMUM CONVEYOR SPAN	
in.	mm	in.	mm	in.	mm	in.	mm
24	600	78	1950	24	600	66	1650
30	750	84	2100	30	750	72	1800
36	900	90	2250	36	900	78	1950
42	1050	96	2400	42	1050	84	2100
48	1200	102	2550	48	1200	90	2250
54	1350	108	2700	54	1350	96	2400
60	1500	114	2850	60	1500	102	2550
72	1800	126	3150	72	1800	114	2850
84	2100	138	3450	84	2100	126	3150
96	2400	150	3750	96	2400	138	3450
108	2700	162	4050	108	2700	150	3750
120	3000	174	4350	120	3000	162	4050

* For special extra long pole length requirements a Pole Extender Kit (#76024) is available that provides 30" (750mm) of extended pole length. (155).
Pole Diameter – 2-7/8" (73mm)

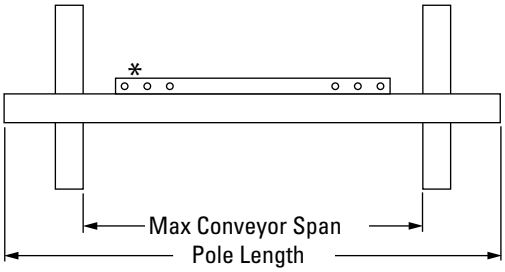

*Each pole size can be used with a blade size down to 18" (450mm) in 6" (150mm) increments

Clearance Guidelines for Installation

HORIZONTAL CLEARANCE REQUIRED		VERTICAL CLEARANCE REQUIRED	
in.	mm	in.	mm
4	100	13	325

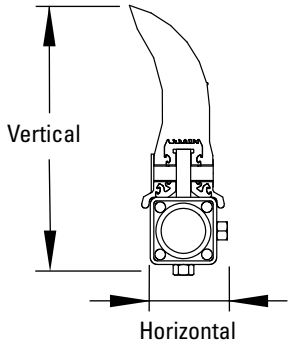

Pole Location Specs

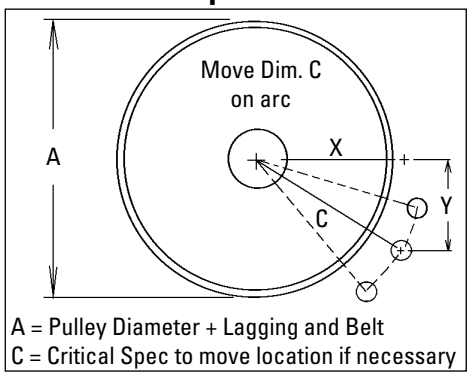

Spring Length Chart

Blade Width	Purple Springs	White Springs	Gold Springs	Silver Springs
18″	4 3/8″	6″	N/A	N/A
24″	N/A	5 3/4″	6″	N/A
30″	N/A	5 1/2″	5 7/8″	N/A
36″	N/A	5 3/8″	5 3/4″	N/A
42″	N/A	5 1/8″	5 5/8″	6 1/8″
48″	N/A	5″	5 5/8″	6 1/8″
54″	N/A	4 3/4″	5 1/2″	6″
60″	N/A	4 1/2″	5 3/8″	6″
66″	N/A	N/A	5 1/4″	5 7/8″
72″	N/A	N/A	5 1/8″	5 7/8″
78″	N/A	N/A	5″	5 3/4″
84″	N/A	N/A	4 7/8″	5 3/4″
90″	N/A	N/A	N/A	5 3/4″
96″	N/A	N/A	N/A	5 5/8″
102″	N/A	N/A	N/A	5 5/8″
108″	N/A	N/A	N/A	5 1/2″
114″	N/A	N/A	N/A	5 1/2″

Shading indicates preferred spring option.

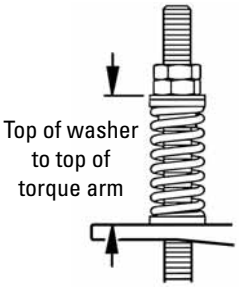

Pressure Chart

Blade Width	PSI
18"	5#
24"	6#
32"	8#
36"	9#
42"	11#
48"	13#
54"	14#
60"	16#
66"	17#
72"	19#
78"	21#
84"	22#
90"	24#

PSI setting is based on the belt width.

Pole Location Chart

A	X	Y	C
16"	8 1/8"	12"	14 1/2"
17"	8 3/4"	12"	14 7/8"
18"	9 1/4"	12"	15 1/8"
19"	9 3/4"	12"	15 1/2"
20"	10 3/8"	12"	15 7/8"
21"	11"	12"	16 1/4"
22"	11 1/2"	12"	16 5/8"
23"	12"	12"	17"
24"	12 5/8"	12"	17 3/8"
25"	13 1/8"	12"	17 3/4"
26"	13 5/8"	12"	18 1/8"
27"	14 1/8"	12"	18 1/2"
28"	14 5/8"	12"	18 7/8"
29"	15 1/4"	12"	19 3/8"
30"	15 5/8"	12"	19 3/4"
31"	16 1/8"	12"	20 1/8"
32"	16 3/4"	12"	20 5/8"
33"	17 1/4"	12"	21"
34"	17 3/4"	12"	21 3/8"
35"	18 1/4"	12"	21 7/8"
36"	18 3/4"	12"	22 1/4"
37"	19 3/8"	12"	22 3/4"
38"	19 3/4"	12"	23 1/8"
39"	20 3/8"	12"	23 5/8"
40"	20 3/4"	12"	24"
41"	21 3/8"	12"	24 1/2"
42"	21 7/8"	12"	25"
43"	22 1/2"	12"	25 1/2"
44"	23 1/8"	12"	26"
45"	23 5/8"	12"	26 1/2"
46"	24 1/8"	12"	27"
47"	24 3/4"	12"	27 1/2"
48"	25 1/4"	12"	28"

Specifications:

- Maximum Belt Speed ..... 1000 FPM (5M/sec)
- Temperature Rating (TuffShear)..... -30°F to 180°F (-35°C to 82°C)
- Temperature Rating (TuffShear High Temp)..... Up to 275°F (135°C) with spikes to 325°F (164°C)
- Minimum Pulley Diameter..... 16" (400mm)
- Blade Height..... 10" (250mm)
- Usable Blade Wear Length..... 6" (150mm)
- Blade Material ..... Polyurethane (proprietary blend for abrasion resistance and long wear)
- Available for Belt Widths ..... 24" to 120" (600 to 3000mm). Other sizes available upon request.
- CEMA Cleaner Rating ..... Class 4

Replacement Parts List

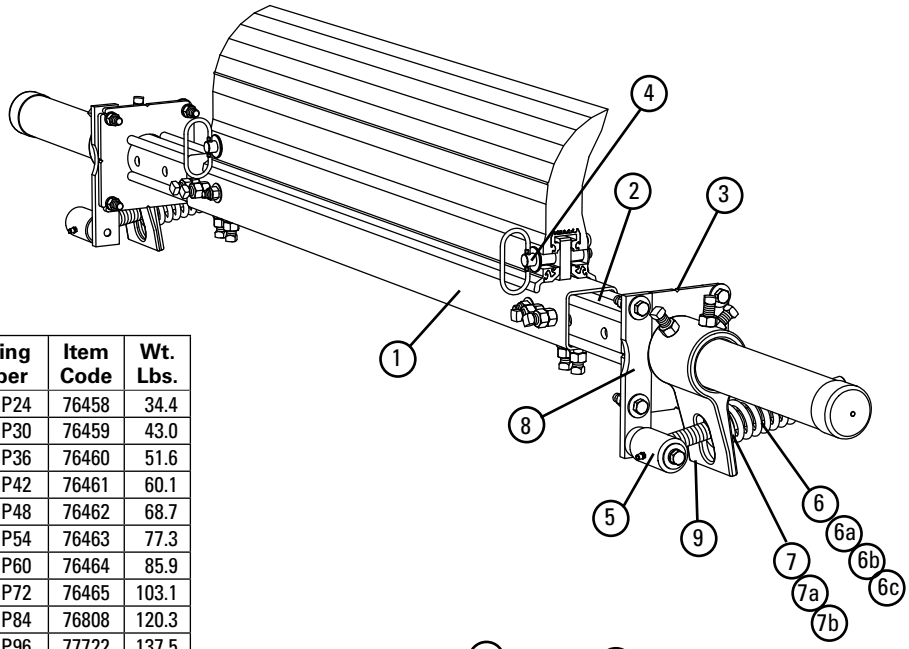

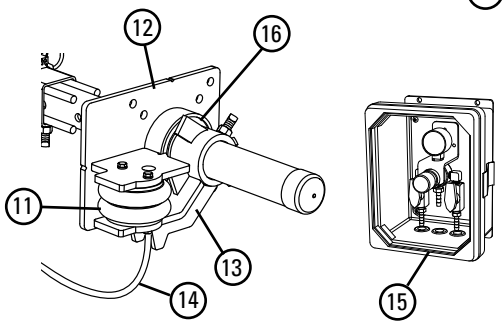

Replacement Parts

Ref	Description	Ordering Number	Item Code	Wt. Lbs.
1	24" (600mm) Center Pole	MMPCP24	76458	34.4
	30" (750mm) Center Pole	MMPCP30	76459	43.0
	36" (900mm) Center Pole	MMPCP36	76460	51.6
	42" (1050mm) Center Pole	MMPCP42	76461	60.1
	48" (1200mm) Center Pole	MMPCP48	76462	68.7
	54" (1350mm) Center Pole	MMPCP54	76463	77.3
	60" (1500mm) Center Pole	MMPCP60	76464	85.9
	72" (1800mm) Center Pole	MMPCP72	76465	103.1
	84" (2100mm) Center Pole	MMPCP84	76808	120.3
	96" (2400mm) Center Pole	MMPCP96	77722	137.5
	108" (2700mm) Center Pole	MMPCP108	90326	154.7
	120" (3000mm) Center Pole	MMPCP120	90327	171.9
2	Extender Pole Kit (2 ea.)	MHP-EP	76392	54.0
3	Mounting Plate Kit* (2 ea.)	MSPMPK	75811	8.3
4	Blade Pin Kit* (1 ea.)	MMPBPK	76466	0.8
5	Pivot Arm Kit* (1 ea.)	QMTPAK	76096	4.3
6	Tension Spring - Purple (1 ea.) for blades 24" (600mm)	QMTS-P	75845	0.6
6a	Tension Spring - White (1 ea.) for blades 30" - 48" (750 - 1200mm)	PSTS-W	75898	1.7
6b	Tension Spring - Gold (1 ea.) for blades 54" - 78" (1350 - 1950mm)	QMTS-G	76484	2.5
6c	Tension Spring - Silver (1 ea.) for blades 84" - 114" (2100 - 2850mm)	PSTS-S	75899	3.0
7	Bushing Kit - Purple (2 ea.)	QMTBK-P	76097	0.1
7a	Bushing Kit - White & Silver (2 ea.)	QMTBK-W	76098	0.2
7b	Bushing Kit - Gold (2 ea.)	QMTBK-G	76540	0.3
8	Pivot Shaft Bracket Kit* (1 ea.)	QMTPSBK	76099	4.3
9	Torsion Arm Kit* (1 ea.)	PSTA	75896	11.4
10	Jam Nut Kit, QMT Tensioner	JNK-C	79893	0.3
-	QMT Spring Tensioner* - Purple (incl. 1 ea. Items 5, 6, 7, 8, & 9) for blades 18" - 24" (450 - 600mm)	QMT-P	76074	20.4
-	QMT Spring Tensioner* - White (incl. 1 ea. Items 5, 6a, 7a, 8, & 9) for blades 30" - 48" (750 - 1200mm)	QMT-W	76075	21.8
-	QMT Spring Tensioner* - Gold (incl. 1 ea. Items 5, 6b, 7b, 8, & 9) for blades 54" - 78" (1350 - 1950mm)	QMT-G	76483	23.2
-	QMT Spring Tensioner* - Silver (incl. 1 ea. Items 5, 6c, 7a, 8 & 9) for blades 84" - 114" (2100 - 2850mm)	QMT-S	79039	20.3
11	Air/Water Bag (1 ea.)	AWTB	75905	3.8
12	Mounting Base (1ea.)	AWTMB	75906	22.9
13	Torque Arm* (1 ea.)	AWTA	75907	11.6
14	Hose Kit (50' of hose and 6 hose clamps)	AWTHK	75909	6.7
15	PAT Control Box 60psi	PACB60	78683	11.0
16	AWT Pole Bearing Assy (For cleaners shipped after 4/2016)	AWTPBA	90000	2.3
-	PAT Kit- AWT Tensioner w/ Control Box (includes 2 ea. Items 11,12,13,14 & 1 ea. Item 15)	PAK	78705	86.2
-	AWT Air/Water Tensioner w/o Control Box (includes 2 ea. Items 11,12, 13 & 14)	AWTNCB	76069	75.2

*Hardware Included
Lead Time: 1 working day

Spring Tensioner Selection Chart

CLEANER BLADE WIDTH	76074 QMT-P	76075 QMT-W	76483 QMT-G	79039 QMT-S
TuffShear 18" - 24" (450—600mm)	X			
TuffShear 30" - 48" (750—1200mm)		X		
TuffShear 54" - 78" (1350—1950mm)			X	
TuffShear 84" - 114" (2100—2850mm)				X

Replacement Parts List

Stainless Steel MMP
Medium Mine-Duty Precleaner

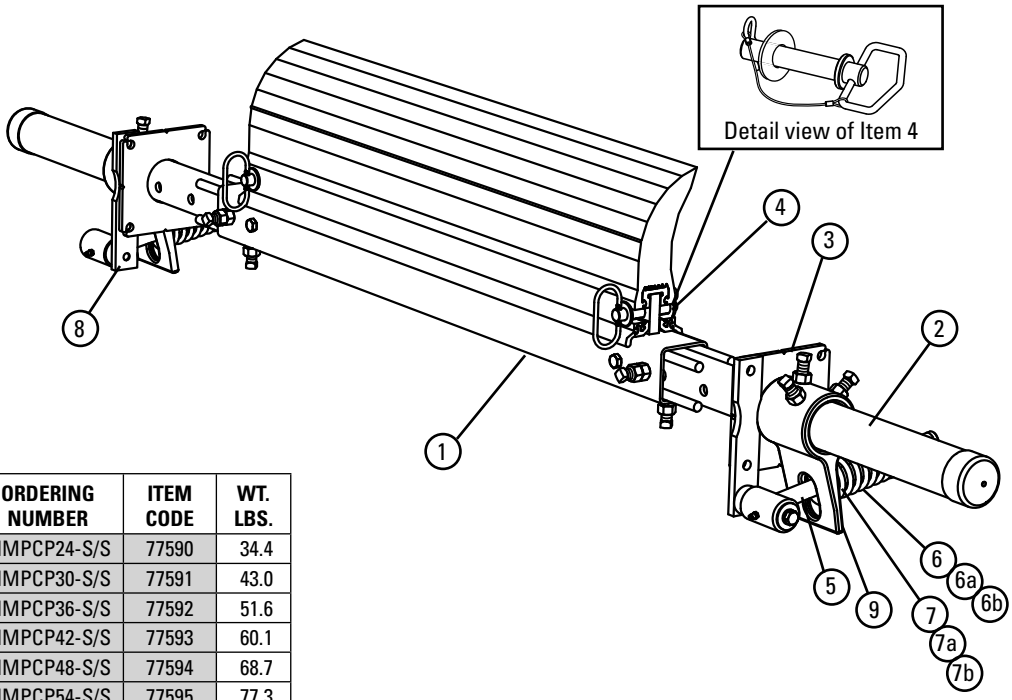

Replacement Parts

REF	DESCRIPTION	ORDERING NUMBER	ITEM CODE	WT. LBS.
1	24" (600mm) SS Center Pole	MMPCP24-S/S	77590	34.4
	30" (750mm) SS Center Pole	MMPCP30-S/S	77591	43.0
	36" (900mm) SS Center Pole	MMPCP36-S/S	77592	51.6
	42" (1050mm) SS Center Pole	MMPCP42-S/S	77593	60.1
	48" (1200mm) SS Center Pole	MMPCP48-S/S	77594	68.7
	54" (1350mm) SS Center Pole	MMPCP54-S/S	77595	77.3
	60" (1500mm) SS Center Pole	MMPCP60-S/S	77596	85.9
	72" (1800mm) SS Center Pole	MMPCP72-S/S	77597	103.1
	84" (2100mm) SS Center Pole	MMPCP84-S/S	77598	120.3
	96" (2400mm) SS Center Pole	MMPCP96-S/S	78686	137.5
2	SS Extender Pole Kit (2 ea.)	MHP-EP-S/S	77599	54.0
3	SS Mounting Plate Kit* (2 ea.)	MSPMPK-S/S	77582	8.3
4	SS Blade Pin Kit* (1 ea.)	MMPBPK-S/S	77600	0.8
5	SS Pivot Arm Kit* (1 ea.)	QMTPAK-S/S	77587	4.3
6	SS Tension Spring - Purple (1 ea.) for blades 24" (600mm)	QMTS-P-S/S	77450	0.6
6a	SS Tension Spring - White (1 ea.) for blades 30" - 48" (750 - 1200mm)	QMTS-W-S/S	77451	1.7
6b	SS Tension Spring - Gold (1 ea.) for blades 54" - 78" (1350 - 1950mm)	QMTS-G-S/S	77452	2.5
6c	SS Tension Spring - Silver (1 ea.) for blades 84"-90" (2100-2250mm)	QMTS-S-S/S	79056	3.1
7	Bushing Kit - Purple (2 ea.)	QMTBK-P	76097	0.1
7a	Bushing Kit - White and Silver (2 ea.)	QMTBK-W	76098	0.2
7b	Bushing Kit - Gold (2 ea.)	QMTBK-G	76540	0.3
8	SS Pivot Shaft Bracket Kit* (1 ea.)	QMTPSBK-S/S	77588	4.3
9	SS Torsion Arm Kit* (1 ea.)	PSTA-S/S	77442	11.4
-	SS QMT Spring Tensioner* - Purple (incl. 1 ea. Items 5, 6, 7, 8, & 9) for blades 18" - 24" (450 - 600mm)	QMT-P-S/S	77584	20.4
-	SS QMT Spring Tensioner* - White (incl. 1 ea. Items 5, 6a, 7a, 8, & 9) for blades 30" - 48" (750 - 1200mm)	QMT-W-S/S	77585	21.8
-	SS QMT Spring Tensioner* - Gold (incl. 1 ea. Items 5, 6b, 7b, 8, & 9) for blades 54" - 78" (1350 - 1950mm)	QMT-G-S/S	77586	23.2
-	SS QMT Spring Tensioner* - Silver (incl. 1 ea. Items 5, 6c, 7a, 8 & 9) for blades 84"-90" (2100-2250mm)	QMT-S-S/S	79059	24.6

*Hardware Included
Lead Time: 1 working day

Shaded items are made to order.
Lead time: 3 weeks

Spring Tensioner Selection Chart

CLEANER BLADE WIDTH	77584 QMT-P-S/S	77585 QMT-W-S/S	77586 QMT-G-S/S	79059 QMT-S-S/S
TuffShear 18" - 24" (450 - 600mm)	X			
TuffShear 30" - 48" (750 - 1200mm)		X		
TuffShear 54" - 78" (1350 - 1950mm)			X	
TuffShear 84"-90" (2100-2250mm)				X

Product Ordering Information

MMP
Medium Mine-Duty Precleaner, Underground

MMP Medium-Duty UG Precleaner Belt Width Minus 6" (150mm)

BELT WIDTH		BLADE WIDTH		ORDERING NUMBER	ITEM CODE	WT. LBS.
in.	mm	in.	mm			
48	1200	42	1050	MMP-648-UG	91943	293.1
54	1350	48	1200	MMP-654-UG	91944	307.1
60	1500	54	1350	MMP-660-UG	91945	321.1
72	1800	66	1650	MMP-672-UG	91946	379.0
84	2100	78	1950	MMP-684-UG	91947	432.8
96	2400	90	2250	MMP-696-UG	91948	487.6
108	2700	102	2550	MMP-6108-UG	91949	541.4
120	3000	114	2850	MMP-6120-UG	91950	595.2

MMP Medium-Duty UG Precleaner Belt Width Minus 12" (300mm)

BELT WIDTH		BLADE WIDTH		ORDERING NUMBER	ITEM CODE	WT. LBS.
in.	mm	in.	mm			
48	1200	36	900	MMP-1248-UG	91951	286.1
54	1350	42	1050	MMP-1254-UG	91952	300.1
60	1500	48	1200	MMP-1260-UG	91953	314.1
72	1800	60	1500	MMP-1272-UG	91954	372.0
84	2100	72	1800	MMP-1284-UG	91955	425.8
96	2400	84	2100	MMP-1296-UG	91956	480.6
108	2700	96	2400	MMP-12108-UG	91957	534.4
120	3000	108	2700	MMP-12120-UG	91958	588.2

MMP Medium-Duty UG Precleaner Belt Width Minus 18" (450mm)

BELT WIDTH		BLADE WIDTH		ORDERING NUMBER	ITEM CODE	WT. LBS.
in.	mm	in.	mm			
48	1200	30	750	MMP-1848-UG	91959	279.1
54	1350	36	900	MMP-1854-UG	91960	293.1
60	1500	42	1050	MMP-1860-UG	91961	307.1
72	1800	54	1350	MMP-1872-UG	91962	365.0
84	2100	66	1650	MMP-1884-UG	91963	418.8
96	2400	78	1950	MMP-1896-UG	91964	473.6
108	2700	90	2250	MMP-18108-UG	91965	527.4
120	3000	102	2550	MMP-18120-UG	91966	581.2

MMP Medium-Duty UG Precleaner Belt Width Minus 24" (600mm)

BELT WIDTH		BLADE WIDTH		ORDERING NUMBER	ITEM CODE	WT. LBS.
in.	mm	in.	mm			
48	1200	24	600	MMP-2448-UG	91967	272.1
54	1350	30	750	MMP-2454-UG	91968	286.1
60	1500	36	900	MMP-2460-UG	91969	300.1
72	1800	48	1200	MMP-2472-UG	91970	358.0
84	2100	60	1500	MMP-2484-UG	91971	411.8
96	2400	72	1800	MMP-2496-UG	91972	466.6
108	2700	84	2100	MMP-24108-UG	91973	520.4
120	3000	96	2400	MMP-24120-UG	91974	574.2

MMP Medium-Duty UG Precleaner Belt Width Minus 30" (750mm)

BELT WIDTH		BLADE WIDTH		ORDERING NUMBER	ITEM CODE	WT. LBS.
in.	mm	in.	mm			
48	1200	18	450	MMP-3048-UG	91975	265.1
54	1350	24	600	MMP-3054-UG	91976	279.1
60	1500	30	750	MMP-3060-UG	91977	293.1
72	1800	42	1050	MMP-3072-UG	91978	351.0
84	2100	54	1350	MMP-3084-UG	91979	404.8
96	2400	66	1650	MMP-3096-UG	91980	459.6
108	2700	78	1950	MMP-30108-UG	91981	513.4
120	3000	90	2250	MMP-30120-UG	91982	567.2

MMP Medium-Duty UG Precleaner Belt Width Minus 36" (900mm)

BELT WIDTH		BLADE WIDTH		ORDERING NUMBER	ITEM CODE	WT. LBS.
in.	mm	in.	mm			
54	1350	18	450	MMP-3654-UG	91983	272.1
60	1500	24	600	MMP-3660-UG	91984	286.1
72	1800	36	900	MMP-3672-UG	91985	344.0
84	2100	48	1200	MMP-3684-UG	91986	397.8
96	2400	60	1500	MMP-3696-UG	91987	452.6
108	2700	72	1800	MMP-36108-UG	91988	506.4
120	3000	84	2100	MMP-36120-UG	91989	560.2

Standard Lead time: 1 working day

Shaded items are made to order.
Lead time: 3 weeks

Optional Mounting Kits

DESCRIPTION	ORDERING NUMBER	ITEM CODE	WT. LBS.
Optional Mounting Bar Kit *	MMBK	75830	19.5
Mounting Plate Kit * (2 plates)	MMPK	76537	140.0

*Hardware Included

Product Notes:

- Recommended for medium-duty conveyor applications. For abusive applications see the MHCP Heavy-Duty Cartridge Precleaner (69).
- Material Path Option: Fit the blade width to the belt's material path. The material path is typically the center 2/3 of the belt width. In most cases a blade size of belt width minus 6" (150mm) may be the best solution.
- Each cleaner pole is retrofittable in blade sizes down to 18" (450mm) in 6" (150mm) increments.
- Pole Length: Belt width plus 96" (2400mm). For longer requirements see Installation Accessories – Pole Extender Kit (155).
- Visual Tension Check: No guesswork on blade tensioning. Measure the spring and adjust to specified length per blade width to restore optimal tensioning.
- To make cleaner installation easier and quicker, see Optional Mounting Kits (155).

Product Ordering Information

MMP
Medium Mine-Duty Precleaner, Underground with Portable Air Tensioner

MMP Medium-Duty UG Precleaner w/PAT Belt Width Minus 6" (150mm)

BELT WIDTH		BLADE WIDTH		ORDERING NUMBER	ITEM CODE	WT. LBS.
in.	mm	in.	mm			
48	1200	42	1050	MMP-648P-UG	92014	335.7
54	1350	48	1200	MMP-654P-UG	92015	349.7
60	1500	54	1350	MMP-660P-UG	92016	363.7
72	1800	66	1650	MMP-672P-UG	92017	421.6
84	2100	78	1950	MMP-684P-UG	92018	475.4
96	2400	90	2250	MMP-696P-UG	92019	530.2
108	2700	102	2550	MMP-6108P-UG	92020	584.0
120	3000	114	2850	MMP-6120P-UG	92021	637.8

MMP Medium-Duty UG Precleaner w/PAT Belt Width Minus 12" (300mm)

BELT WIDTH		BLADE WIDTH		ORDERING NUMBER	ITEM CODE	WT. LBS.
in.	mm	in.	mm			
48	1200	36	900	MMP-1248P-UG	92022	328.7
54	1350	42	1050	MMP-1254P-UG	92023	342.7
60	1500	48	1200	MMP-1260P-UG	92024	356.7
72	1800	60	1500	MMP-1272P-UG	92025	414.6
84	2100	72	1800	MMP-1284P-UG	92026	468.4
96	2400	84	2100	MMP-1296P-UG	92027	523.2
108	2700	96	2400	MMP-12108P-UG	92028	577.0
120	3000	108	2700	MMP-12120P-UG	92029	630.8

MMP Medium-Duty UG Precleaner w/PAT Belt Width Minus 18" (450mm)

BELT WIDTH		BLADE WIDTH		ORDERING NUMBER	ITEM CODE	WT. LBS.
in.	mm	in.	mm			
48	1200	30	750	MMP-1848P-UG	92030	321.7
54	1350	36	900	MMP-1854P-UG	92031	335.7
60	1500	42	1050	MMP-1860P-UG	92032	349.7
72	1800	54	1350	MMP-1872P-UG	92033	407.6
84	2100	66	1650	MMP-1884P-UG	92034	461.4
96	2400	78	1950	MMP-1896P-UG	92035	516.2
108	2700	90	2250	MMP-18108P-UG	92036	570.0
120	3000	102	2550	MMP-18120P-UG	92037	623.8

MMP Medium-Duty UG Precleaner w/PAT Belt Width Minus 24" (600mm)

BELT WIDTH		BLADE WIDTH		ORDERING NUMBER	ITEM CODE	WT. LBS.
in.	mm	in.	mm			
48	1200	24	600	MMP-2448P-UG	92038	314.7
54	1350	30	750	MMP-2454P-UG	92039	328.7
60	1500	36	900	MMP-2460P-UG	92040	342.7
72	1800	48	1200	MMP-2472P-UG	92041	400.6
84	2100	60	1500	MMP-2484P-UG	92042	454.4
96	2400	72	1800	MMP-2496P-UG	92043	509.2
108	2700	84	2100	MMP-24108P-UG	92044	563.0
120	3000	96	2400	MMP-24120P-UG	92045	616.8

MMP Medium-Duty UG Precleaner w/PAT Belt Width Minus 30" (750mm)

BELT WIDTH		BLADE WIDTH		ORDERING NUMBER	ITEM CODE	WT. LBS.
in.	mm	in.	mm			
48	1200	18	450	MMP-3048P-UG	92046	307.7
54	1350	24	600	MMP-3054P-UG	92047	321.7
60	1500	30	750	MMP-3060P-UG	92048	335.7
72	1800	42	1050	MMP-3072P-UG	92049	393.6
84	2100	54	1350	MMP-3084P-UG	92050	447.4
96	2400	66	1650	MMP-3096P-UG	92051	502.2
108	2700	78	1950	MMP-30108P-UG	92052	556.0
120	3000	90	2250	MMP-30120P-UG	92053	609.8

MMP Medium-Duty UG Precleaner w/PAT Belt Width Minus 36" (900mm)

BELT WIDTH		BLADE WIDTH		ORDERING NUMBER	ITEM CODE	WT. LBS.
in.	mm	in.	mm			
54	1350	18	450	MMP-3654P-UG	92054	314.7
60	1500	24	600	MMP-3660P-UG	92055	328.7
72	1800	36	900	MMP-3672P-UG	92056	386.6
84	2100	48	1200	MMP-3684P-UG	92057	440.4
96	2400	60	1500	MMP-3696P-UG	92058	495.2
108	2700	72	1800	MMP-36108P-UG	92059	549.0
120	3000	84	2100	MMP-36120P-UG	92060	602.8

Standard Lead time: 1 working day

Shaded items are made to order.
Lead time: 3 weeks

Optional Mounting Kits

DESCRIPTION	ORDERING NUMBER	ITEM CODE	WT. LBS.
Optional Mounting Bar Kit *	MMBK	75830	19.5
Mounting Plate Kit * (2 plates)	MMPK	76537	140.0

*Hardware Included

Product Notes:

- Recommended for medium-duty conveyor applications. For abusive applications see the MHCP Heavy-Duty Cartridge Precleaner (69).
- Material Path Option: Fit the blade width to the belt's material path. The material path is typically the center 2/3 of the belt width. In most cases a blade size of belt width minus 6" (150mm) may be the best solution.
- Each cleaner pole is retrofittable in blade sizes down to 18" (450mm) in 6" (150mm) increments.
- Pole Length: Belt width plus 96" (2400mm). For longer requirements see Installation Accessories – Pole Extender Kit (155).
- Visual Tension Check: No guesswork on blade tensioning. Measure the spring and adjust to specified length per blade width to restore optimal tensioning.
- To make cleaner installation easier and quicker, see Optional Mounting Kits (155).

Product Ordering Information

Air Tanks

ORDERING NUMBER	ITEM CODE	WT. LBS.
PAT1	78684	13.0
PAT2	78685	13.0

PAT1 (Single)

PAT2 (Dual)

Replacement Parts List

REF	DESCRIPTION	ORDERING NUMBER	ITEM CODE	WT. LBS.
1	Tank Label Kit	PATLK	78791	0.1
2	Tank Hose Kit (incl. 1 ea. 10' hose and 1' poly spiral wrap, 2 hose clamps)	PATHK	78794	1.5

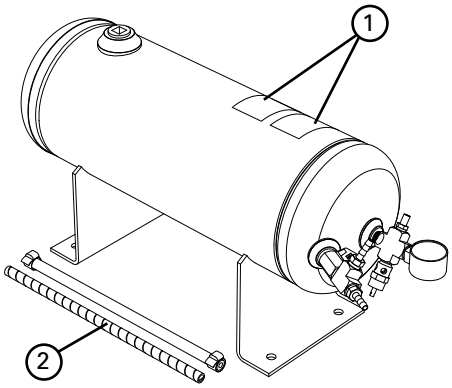

Product Notes:

- For use with PAT cleaner assemblies and PAT control box.
- Single for applications with one cleaner, double for applications with two cleaners.
- 150# pop-off valve for safe pressurizing/charging of Air Tank.
- ASME construction.

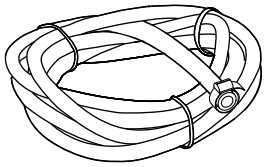

Air Line Connection for Site-Accessible Air

ORDERING NUMBER	ITEM CODE	WT. LBS.
PATHK*	78794	1.5

* incl. 10' hose, 1' poly spiral wrap, 2 hose clamps

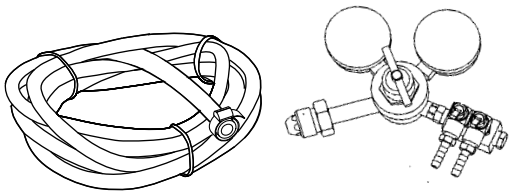

Nitrogen Tank Connection for Site-Provided Nitrogen Tank

ORDERING NUMBER	ITEM CODE	WT. LBS.
PANK*	78799	5.0

* incl. Nitrogen Regulator, 10' hose, 2 hose clamps

TuffShear™ Replacement Blades

MMP
Medium Mine-Duty Precleaner, Underground with Portable Air Tensioner

NOTE: TuffShear replacement blades will retrofit to Martin® QC® XHD Cleaners.

Replacement TuffShear™ Blades

BLADE WIDTH		ORDERING NUMBER	ITEM CODE	WT. LBS.
in.	mm			
18	450	TRB18	76485	21.0
24	600	TRB24	76486	28.0
30	750	TRB30	76487	35.0
36	900	TRB36	76488	42.0
42	1050	TRB42	76489	49.0
48	1200	TRB48	76490	56.0
54	1350	TRB54	76491	63.0
60	1500	TRB60	76492	70.0
66	1650	TRB66	76493	77.0
72	1800	TRB72	76494	84.0
78	1950	TRB78	76697	91.0
84	2100	TRB84	77047	98.0
90	2250	TRB90	77048	105.0
96	2400	TRB96	90358	112.0
102	2550	TRB102	90359	119.0
108	2700	TRB108	90360	126.0
114	2850	TRB114	90361	133.0

Other blade sizes available upon request.
Lead time: 1 working day

Replacement TuffShear™ High-Temp Blades

BLADE WIDTH		ORDERING NUMBER	ITEM CODE	WT. LBS.
in.	mm			
18	450	TRB-HT18	78754	21.0
24	600	TRB-HT24	78755	28.0
30	750	TRB-HT30	78756	35.0
36	900	TRB-HT36	78757	42.0
42	1050	TRB-HT42	78758	49.0
48	1200	TRB-HT48	78759	56.0
54	1350	TRB-HT54	78760	63.0
60	1500	TRB-HT60	78761	70.0
66	1650	TRB-HT66	78762	77.0
72	1800	TRB-HT72	78763	84.0
78	1950	TRB-HT78	78764	91.0
84	2100	TRB-HT84	78765	98.0
90	2250	TRB-HT90	78766	105.0
96	2400	TRB-HT96	92698	112.0
102	2550	TRB-HT102	92704	119.0
108	2700	TRB-HT108	92710	126.0
114	2850	TRB-HT114	92716	133.0

Other blade sizes available upon request.
Lead time: 1 working day

Replacement TuffShear™ Ultra High-Temp Blades

BLADE WIDTH		ORDERING NUMBER	ITEM CODE	WT. LBS.
in.	mm			
18	450	TRB-UHT18	91865	21.0
24	600	TRB-UHT24	91866	28.0
30	750	TRB-UHT30	91867	35.0
36	900	TRB-UHT36	91868	42.0
42	1050	TRB-UHT42	91869	49.0
48	1200	TRB-UHT48	91870	56.0
54	1350	TRB-UHT54	91871	63.0
60	1500	TRB-UHT60	91872	70.0
66	1650	TRB-UHT66	91873	77.0
72	1800	TRB-UHT72	91874	84.0
78	1950	TRB-UHT78	91875	91.0
84	2100	TRB-UHT84	91876	98.0
90	2250	TRB-UHT90	91877	105.0
96	2400	TRB-UHT96	92782	112.0
102	2550	TRB-UHT102	92788	119.0
108	2700	TRB-UHT108	92794	126.0
114	2850	TRB-UHT114	92800	133.0

Lead time: 1 working day

Product Notes:

- A molded-in wear line indicates when the blade is worn out and needs to be replaced.
- Faceted blade profile: Renews its cleaning edge as the blade wears.
- TuffShear™ blades are made of a special long-wearing polyurethane.
- Quick blade replacement: Pull one pin, remove the old blade and slide the new one in.

Martin® and QC® #1 are registered trademarks of Martin Engineering, Neponset, IL.

Specifications & Guidelines

MMP
Medium Mine-Duty Precleaner, Underground with Portable Air Tensioner

Pole Length Specifications*

CLEANER SIZE		MAX OVERALL POLE LENGTH		CENTER POLE LENGTH		MAXIMUM CONVEYOR SPAN	
in.	mm	in.	mm	in.	mm	in.	mm
48	1200	2	3600	54	1350	132	3300
54	1350	150	3750	60	1500	138	3450
60	1500	156	3900	66	1650	144	3600
72	1800	168	4200	78	1950	156	3900
84	2100	180	4500	90	2250	168	4200
96	2400	192	4800	102	2550	180	4500
108	2700	204	5100	114	2850	192	4800
120	3000	216	4350	126	3150	204	5100

* For special extra long pole length requirements a Pole Extender Kit (#76024) is available that provides 30" (750mm) of extended pole length. (155).
Pole Diameter – 2-7/8" (73mm)

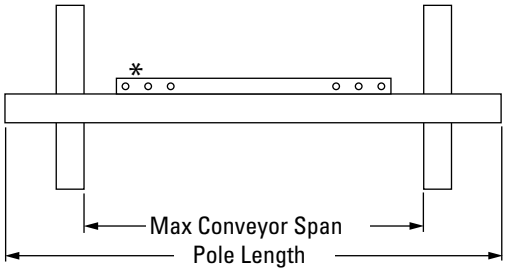

*Each pole size can be used with a blade size down to 18" (450mm) in 6" (150mm) increments

Pole Location Specs

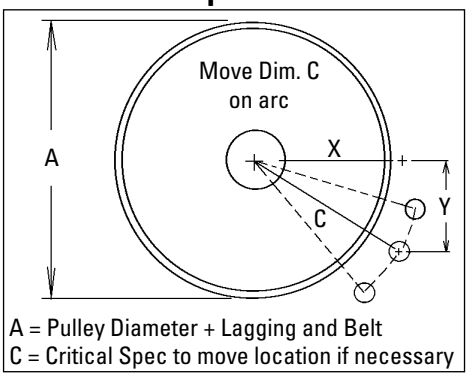

Clearance Guidelines for Installation

HORIZONTAL CLEARANCE REQUIRED		VERTICAL CLEARANCE REQUIRED	
in.	mm	in.	mm
4	100	13	325

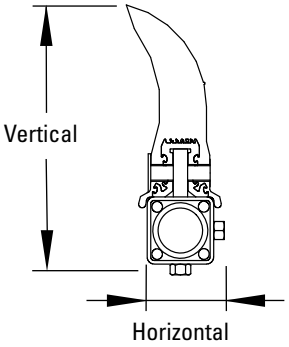

Spring Length Chart

Blade Width	Purple Springs	White Springs	Gold Springs	Silver Springs
18"	4 3/8"	6"	N/A	N/A
24"	N/A	5 3/4"	6"	N/A
30"	N/A	5 1/2"	5 7/8"	N/A
36"	N/A	5 3/8"	5 3/4"	N/A
42"	N/A	5 1/8"	5 5/8"	6 1/8"
48"	N/A	5"	5 5/8"	6 1/8"
54"	N/A	4 3/4"	5 1/2"	6"
60"	N/A	4 1/2"	5 3/8"	6"
66"	N/A	N/A	5 1/4"	5 7/8"
72"	N/A	N/A	5 1/8"	5 7/8"
78"	N/A	N/A	5"	5 3/4"
84"	N/A	N/A	4 7/8"	5 3/4"
90"	N/A	N/A	N/A	5 3/4"
96"	N/A	N/A	N/A	5 5/8"
102"	N/A	N/A	N/A	5 5/8"
108"	N/A	N/A	N/A	5 1/2"
114"	N/A	N/A	N/A	5 1/2"

Shading indicates preferred spring option.

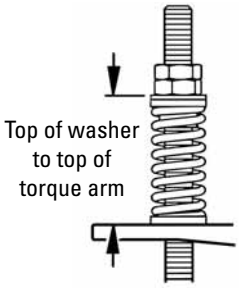

Pressure Chart

Blade Width	PSI
18"	5#
24"	6#
32"	8#
36"	9#
42"	11#
48"	13#
54"	14#
60"	16#
66"	17#
72"	19#
78"	21#
84"	22#
90"	24#

PSI setting is based on the belt width.

Pole Location Chart

A	X	Y	C
16"	8 1/8"	12"	14 1/2"
17"	8 3/4"	12"	14 7/8"
18"	9 1/4"	12"	15 1/8"
19"	9 3/4"	12"	15 1/2"
20"	10 3/8"	12"	15 7/8"
21"	11"	12"	16 1/4"
22"	11 1/2"	12"	16 5/8"
23"	12"	12"	17"
24"	12 5/8"	12"	17 3/8"
25"	13 1/8"	12"	17 3/4"
26"	13 5/8"	12"	18 1/8"
27"	14 1/8"	12"	18 1/2"
28"	14 5/8"	12"	18 7/8"
29"	15 1/4"	12"	19 3/8"
30"	15 5/8"	12"	19 3/4"
31"	16 1/8"	12"	20 1/8"
32"	16 3/4"	12"	20 5/8"
33"	17 1/4"	12"	21"
34"	17 3/4"	12"	21 3/8"
35"	18 1/4"	12"	21 7/8"
36"	18 3/4"	12"	22 1/4"
37"	19 3/8"	12"	22 3/4"
38"	19 3/4"	12"	23 1/8"
39"	20 3/8"	12"	23 5/8"
40"	20 3/4"	12"	24"
41"	21 3/8"	12"	24 1/2"
42"	21 7/8"	12"	25"
43"	22 1/2"	12"	25 1/2"
44"	23 1/8"	12"	26"
45"	23 5/8"	12"	26 1/2"
46"	24 1/8"	12"	27"
47"	24 3/4"	12"	27 1/2"
48"	25 1/4"	12"	28"

Specifications:

- Maximum Belt Speed .....1000 FPM (5M/sec)
- Temperature Rating (TuffShear).....-30°F to 180°F (-35°C to 82°C)
- Temperature Rating (TuffShear High Temp).....Up to 275°F (135°C) with spikes to 325°F (164°C)
- Minimum Pulley Diameter.....16" (400mm)
- Blade Height.....10" (250mm)
- Usable Blade Wear Length.....6" (150mm)
- Blade Material .....Polyurethane (proprietary blend for abrasion resistance and long wear)
- Available for Belt Widths .....48" to 120" (1200 to 3000mm). Other sizes available upon request.
- CEMA Cleaner Rating .....Class 4

Replacement Parts List

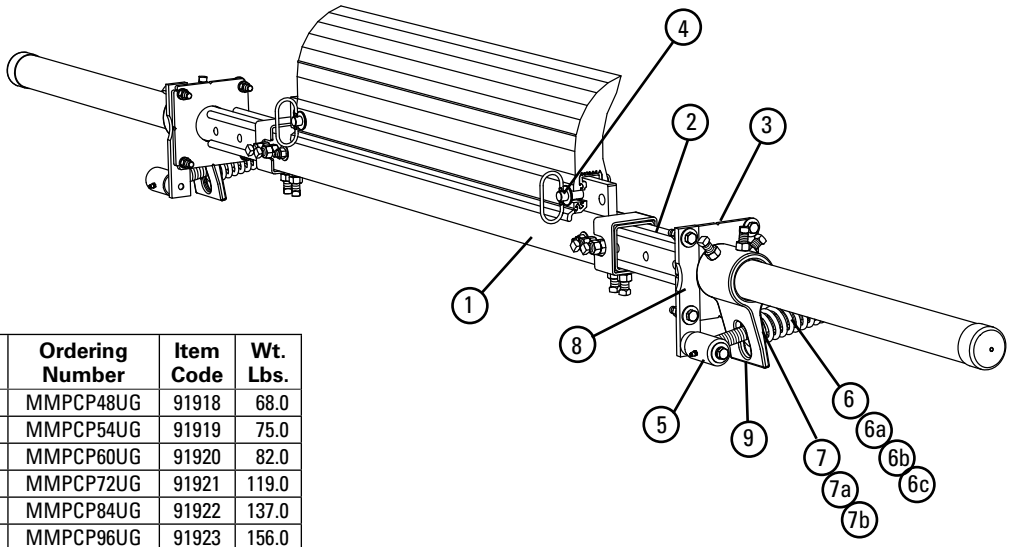

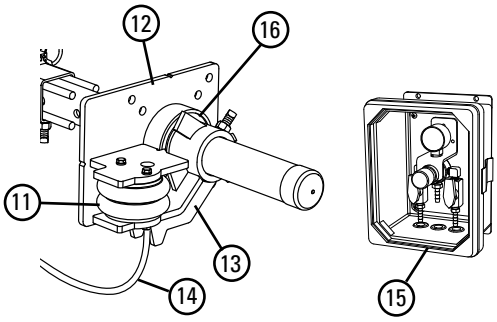

Replacement Parts

Ref	Description	Ordering Number	Item Code	Wt. Lbs.
1	48" (1200mm) UG Center Pole	MMPCP48UG	91918	68.0
	54" (1350mm) UG Center Pole	MMPCP54UG	91919	75.0
	60" (1500mm) UG Center Pole	MMPCP60UG	91920	82.0
	72" (1800mm) UG Center Pole	MMPCP72UG	91921	119.0
	84" (2100mm) UG Center Pole	MMPCP84UG	91922	137.0
	96" (2400mm) UG Center Pole	MMPCP96UG	91923	156.0
	108" (2700mm) UG Center Pole	MMPCP108UG	91924	174.0
	120" (3000mm) UG Center Pole	MMPCP120UG	91925	192.0
2	Extender Pole HD Kit (2 ea.)	MHP-EPHD-54	91347	126.0
3	Mounting Plate Kit* (2 ea.)	MSPMPK	75811	8.3
4	Blade Pin Kit* (1 ea.)	MMPBPK	76466	0.8
5	Pivot Arm Kit* (1 ea.)	QMTPAK	76096	4.3
6	Tension Spring - Purple (1 ea.) for blades 24" (600mm)	QMTS-P	75845	0.6
6a	Tension Spring - White (1 ea.) for blades 30" - 48" (750 - 1200mm)	PSTS-W	75898	1.7
6b	Tension Spring - Gold (1 ea.) for blades 54" - 78" (1350 - 1950mm)	QMTS-G	76484	2.5
6c	Tension Spring - Silver (1 ea.) for blades 84" - 114" (2100 - 2850mm)	PSTS-S	75899	3.0
7	Bushing Kit - Purple (2 ea.)	QMTBK-P	76097	0.1
7a	Bushing Kit - White & Silver (2 ea.)	QMTBK-W	76098	0.2
7b	Bushing Kit - Gold (2 ea.)	QMTBK-G	76540	0.3
8	Pivot Shaft Bracket Kit* (1 ea.)	QMTPSBK	76099	4.3
9	Torsion Arm Kit* (1 ea.)	PSTA	75896	11.4
10	Jam Nut Kit, QMT Tensioner	JNK-C	79893	0.3
-	QMT Spring Tensioner* - Purple (incl. 1 ea. Items 5, 6, 7, 8, & 9) for blades 18" - 24" (450 - 600mm)	QMT-P	76074	20.4
-	QMT Spring Tensioner* - White (incl. 1 ea. Items 5, 6a, 7a, 8, & 9) for blades 30" - 48" (750 - 1200mm)	QMT-W	76075	21.8
-	QMT Spring Tensioner* - Gold (incl. 1 ea. Items 5, 6b, 7b, 8, & 9) for blades 54" - 78" (1350 - 1950mm)	QMT-G	76483	23.2
-	QMT Spring Tensioner* - Silver (incl. 1 ea. Items 5, 6c, 7a, 8 & 9) for blades 84" - 114" (2100 - 2850mm)	QMT-S	79039	20.3
11	Air/Water Bag (1 ea.)	AWTB	75905	3.8
12	Mounting Base (1ea.)	AWTMB	75906	22.9
13	Torque Arm* (1 ea.)	AWTA	75907	11.6
14	Hose Kit (50' of hose and 6 hose clamps)	AWTHK	75909	6.7
15	PAT Control Box 60psi	PACB60	78683	11.0
16	AWT Pole Bearing Assy (For cleaners shipped after 4/2016)	AWTPBA	90000	2.3
-	PAT Kit- AWT Tensioner w/ Control Box (includes 2 ea. Items 11,12,13,14 & 1 ea. Item 15)	PAK	78705	86.2
-	AWT Air/Water Tensioner w/o Control Box (includes 2 ea. Items 11,12, 13 & 14)	AWTNCB	76069	75.2

*Hardware Included
Lead Time: 1 working day

Spring Tensioner Selection Chart

CLEANER BLADE WIDTH	76074 QMT-P	76075 QMT-W	76483 QMT-G	79039 QMT-S
TuffShear 18" - 24" (450—600mm)	X			
TuffShear 30" - 48" (750—1200mm)		X		
TuffShear 54" - 78" (1350—1950mm)			X	
TuffShear 84" - 114" (2100—2850mm)				X

Product Ordering Information

MHP
Mine Tough Heavy-Duty Precleaner

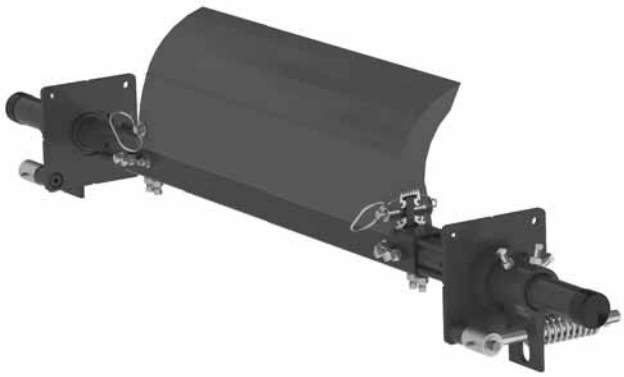

Belt Width Minus 6" (150mm)

BELT WIDTH		BLADE WIDTH		ORDERING NUMBER	ITEM CODE	WT. LBS
in.	mm	in.	mm			
24	600	18	450	MHP-624	77703	249.4
30	750	24	600	MHP-630	77704	267.6
36	900	30	750	MHP-636	77705	285.8
42	1050	36	900	MHP-642	77706	304.0
48	1200	42	1050	MHP-648	77707	322.2
54	1350	48	1200	MHP-654	77708	341.7
60	1500	54	1350	MHP-660	77709	359.9
72	1800	66	1650	MHP-672	77710	396.4
84	2100	78	1950	MHP-684	77711	432.9
96	2400	90	2250	MHP-696	77712	469.4
108	2700	102	2550	MHP-6108	90151	505.9
120	3000	114	2850	MHP-6120	90152	542.4

Belt Width Minus 12" (300mm)

BELT WIDTH		BLADE WIDTH		ORDERING NUMBER	ITEM CODE	WT. LBS
in.	mm	in.	mm			
30	750	18	450	MHP-1230	77713	258.0
36	900	24	600	MHP-1236	77714	276.2
42	1050	30	750	MHP-1242	77715	294.3
48	1200	36	900	MHP-1248	77716	312.6
54	1350	42	1050	MHP-1254	77717	330.8
60	1500	48	1200	MHP-1260	77718	350.3
72	1800	60	1500	MHP-1272	77719	386.8
84	2100	72	1800	MHP-1284	77720	432.2
96	2400	84	2100	MHP-1296	77721	477.6
108	2700	96	2400	MHP-12108	90153	496.3
120	3000	108	2700	MHP-12120	90154	532.8

Belt Width Minus 18" (450mm)

BELT WIDTH		BLADE WIDTH		ORDERING NUMBER	ITEM CODE	WT. LBS
in.	mm	in.	mm			
36	900	18	450	MHP-1836	78591	266.6
42	1050	24	600	MHP-1842	78592	284.7
48	1200	30	750	MHP-1848	78593	302.9
54	1350	36	900	MHP-1854	78594	321.2
60	1500	42	1050	MHP-1860	78595	339.4
72	1800	54	1350	MHP-1872	78596	377.1
84	2100	66	1650	MHP-1884	78597	413.6
96	2400	78	1950	MHP-1896	78598	450.1
108	2700	90	2250	MHP-18108	90155	486.7
120	3000	102	2550	MHP-18120	90156	523.2

Belt Width Minus 24" (600mm)

BELT WIDTH		BLADE WIDTH		ORDERING NUMBER	ITEM CODE	WT. LBS
in.	mm	in.	mm			
42	1050	18	450	MHP-2442	78669	275.1
48	1200	24	600	MHP-2448	78670	293.3
54	1350	30	750	MHP-2454	78671	311.5
60	1500	36	900	MHP-2460	78672	329.8
72	1800	48	1200	MHP-2472	78673	367.5
84	2100	60	1500	MHP-2484	78674	404.0
96	2400	72	1800	MHP-2496	78675	440.4
108	2700	84	2100	MHP-24108	90157	477.1
120	3000	96	2400	MHP-24120	90158	513.6

Standard Lead time: 1 working day

Shaded items are made to order.
Lead time: 3 weeks

Optional Mounting Kits

DESCRIPTION	ORDERING NUMBER	ITEM CODE	WT. LBS.
Optional Mounting Bar Kit *	MMBK	75830	19.5
Mounting Plate Kit * (2 plates)	MMPK	76537	140.0

*Hardware Included
Lead time: 1 working day

Product Notes:

- Recommended for heavy-duty conveyor applications.
- Material Path Option: Fit the blade width to the belt's material path. The material path is typically the center 2/3 of the belt width. In most cases a blade size of belt width minus 6" may be the best solution.
- Each cleaner pole is retrofittable for blade sizes down to 18" (450mm) in 6" (150mm) increments..
- Pole Length: Belt width plus 54" (1350mm). For longer requirements see Installation Accessories - Pole Extender Kit (155).
- Visual Tension Check: No guesswork on blade tensioning. Measure the spring and adjust to specified length per blade width to restore optimal tensioning.
- To make cleaner installation easier and quicker, see Optional Mounting Kits (155).

Product Ordering Information

MHP
Mine Tough Heavy-Duty Precleaner with Portable Air Tensioner (PAT)

PAT Control Box

Tank sold separately.
See 57 for options.

Belt Width Minus 6" (150mm)

BELT WIDTH		BLADE WIDTH		ORDERING NUMBER	ITEM CODE	WT. LBS
in.	mm	in.	mm			
24	600	18	450	MHP-624P	78599	249.6
30	750	24	600	MHP-630P	78600	267.8
36	900	30	750	MHP-636P	78601	286.0
42	1050	36	900	MHP-642P	78602	304.2
48	1200	42	1050	MHP-648P	78603	322.4
54	1350	48	1200	MHP-654P	78604	340.6
60	1500	54	1350	MHP-660P	78605	358.8
72	1800	66	1650	MHP-672P	78606	395.3
84	2100	78	1950	MHP-684P	78607	431.8
96	2400	90	2250	MHP-696P	78608	468.3
108	2700	102	2550	MHP-6108P	90159	506.1
120	3000	114	2850	MHP-6120P	90160	542.6

Belt Width Minus 12" (300mm)

BELT WIDTH		BLADE WIDTH		ORDERING NUMBER	ITEM CODE	WT. LBS
in.	mm	in.	mm			
30	750	18	450	MHP-1230P	78609	258.2
36	900	24	600	MHP-1236P	78610	276.4
42	1050	30	750	MHP-1242P	78611	294.5
48	1200	36	900	MHP-1248P	78612	312.8
54	1350	42	1050	MHP-1254P	78613	331.0
60	1500	48	1200	MHP-1260P	78614	349.2
72	1800	60	1500	MHP-1272P	78615	385.7
84	2100	72	1800	MHP-1284P	78616	422.1
96	2400	84	2100	MHP-1296P	78617	458.5
108	2700	96	2400	MHP-12108P	90161	496.5
120	3000	108	2700	MHP-12120P	90162	533.0

Belt Width Minus 18" (450mm)

BELT WIDTH		BLADE WIDTH		ORDERING NUMBER	ITEM CODE	WT. LBS
in.	mm	in.	mm			
36	900	18	450	MHP-1836P	78618	266.8
42	1050	24	600	MHP-1842P	78619	284.9
48	1200	30	750	MHP-1848P	78620	303.1
54	1350	36	900	MHP-1854P	78621	321.4
60	1500	42	1050	MHP-1860P	78622	339.6
72	1800	54	1350	MHP-1872P	78623	376.0
84	2100	66	1650	MHP-1884P	78624	412.5
96	2400	78	1950	MHP-1896P	78625	449.0
108	2700	90	2250	MHP-18108P	90163	486.9
120	3000	102	2550	MHP-18120P	90164	523.4

Belt Width Minus 24" (600mm)

BELT WIDTH		BLADE WIDTH		ORDERING NUMBER	ITEM CODE	WT. LBS
in.	mm	in.	mm			
42	1050	18	450	MHP-2442P	78676	275.3
48	1200	24	600	MHP-2448P	78677	293.5
54	1350	30	750	MHP-2454P	78678	311.7
60	1500	36	900	MHP-2460P	78679	330.0
72	1800	48	1200	MHP-2472P	78680	366.4
84	2100	60	1500	MHP-2484P	78681	402.9
96	2400	72	1800	MHP-2496P	78682	439.3
108	2700	84	2100	MHP-24108P	90165	477.3
120	3000	96	2400	MHP-24120P	90166	513.8

Standard Lead time: 1 working day

Shaded items are made to order.
Lead time: 3 weeks

Product Notes:

- Recommended for heavy-duty conveyor applications.
- Material Path Option: Fit the blade width to the belt's material path. The material path is typically the center 2/3 of the belt width. In most cases a blade size of belt width minus 6" (150mm) may be the best solution.
- Each cleaner pole is retrofittable for blade sizes down to 18" (450mm) in 6" (150mm) increments.
- Pole Length: Belt width plus 54" (1350mm). For longer requirements see Installation Accessories – Pole Extender Kit (155).
- Check tension from regulator in control box. Adjust according to air tension per blade width for optimal tensioning.
- To make cleaner installation easier and quicker, see Optional Mounting Kits (155).

Product Ordering Information

Air Tanks

ORDERING NUMBER	ITEM CODE	WT. LBS.
PAT1	78684	13.0
PAT2	78685	13.0

PAT1 (Single)

PAT2 (Dual)

Replacement Parts List

REF	DESCRIPTION	ORDERING NUMBER	ITEM CODE	WT. LBS.
1	Tank Label Kit	PATLK	78791	0.1
2	Tank Hose Kit (incl. 1 ea. 10' hose and 1' poly spiral wrap, 2 hose clamps)	PATHK	78794	1.5

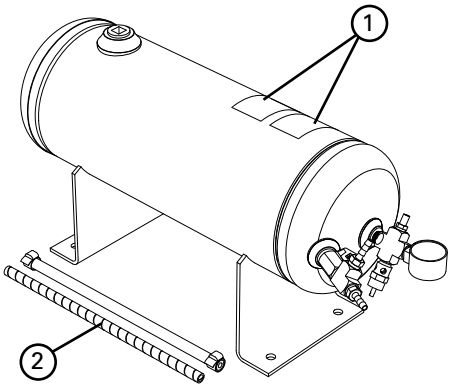

Product Notes:

- For use with PAT cleaner assemblies and PAT control box.
- Single for applications with one cleaner, double for applications with two cleaners.
- 150# pop-off valve for safe pressurizing/charging of Air Tank.
- ASME construction.

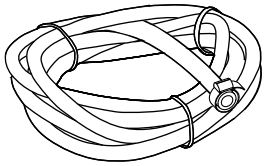

Air Line Connection for Site-Accessible Air

ORDERING NUMBER	ITEM CODE	WT. LBS.
PATHK*	78794	1.5

* incl. 10' hose, 1' poly spiral wrap, 2 hose clamps

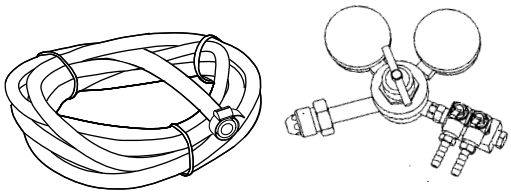

Nitrogen Tank Connection for Site-Provided Nitrogen Tank

ORDERING NUMBER	ITEM CODE	WT. LBS.
PANK*	78799	5.0

* incl. Nitrogen Regulator, 10' hose, 2 hose clamps

Product Ordering Information

Ordering Information
MegaShear™ Replacement Blades

BLADE WIDTH		ORDERING NUMBER	ITEM CODE	WT. LBS
in.	mm			
18	450	MRB18	77531	28.9
24	600	MRB24	77532	38.5
30	750	MRB30	77533	48.1
36	900	MRB36	77534	57.8
42	1050	MRB42	77535	67.4
48	1200	MRB48	77536	77.0
54	1350	MRB54	77537	86.6
60	1500	MRB60	77538	96.3
66	1650	MRB66	77539	105.9
72	1800	MRB72	77540	115.5
78	1950	MRB78	77541	125.1
84	2100	MRB84	77542	134.7
90	2250	MRB90	77543	144.3
96	2400	MRB96	77544	153.9
102	2550	MRB102	77545	163.5
108	2700	MRB108	77546	173.1
114	2850	MRB114	77547	182.7

Other blade sizes available upon request.
Lead time: 1 working day

Match blade width to belt's material path

Belt Width Minus 6" (150mm)

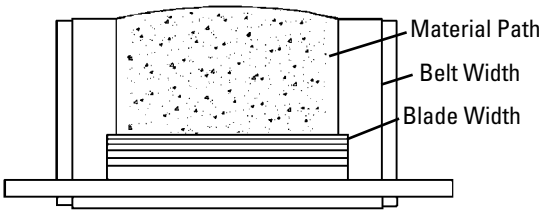

Belt Width Minus 12" (300mm)

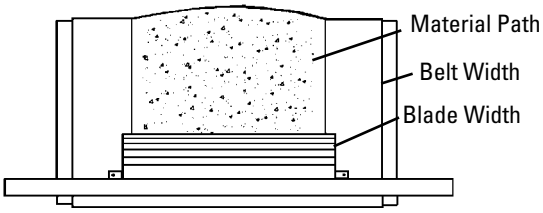

Belt Width Minus 18" (450mm)

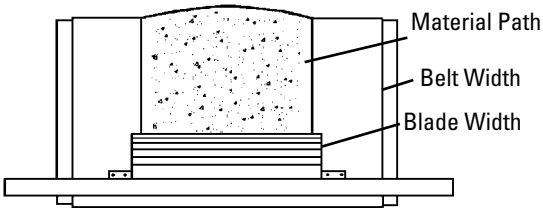

Belt Width Minus 24" (600mm)

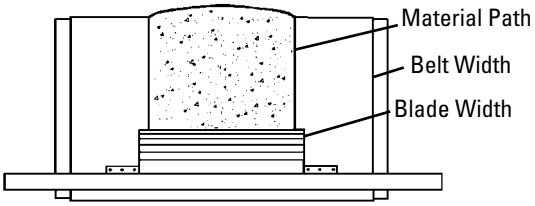

Product Notes:

- A molded-in wear line indicates when the blade is worn out and needs to be replaced.
- Faceted blade profile: Renews its cleaning edge as the blade wears.
- MegaShear™ blades are made of a special long-wearing polyurethane.
- Quick blade replacement: Pull one pin, remove the old blade and slide the new one in.

Pole Length Specifications*

CLEANER SIZE		MAX OVERALL POLE LENGTH		CENTER POLE LENGTH		MAXIMUM CONVEYOR SPAN	
in.	mm	in.	mm	in.	mm	in.	mm
24	600	78	1950	24	600	66	1650
30	750	84	2100	30	750	72	1800
36	900	90	2250	36	900	78	1950
42	1050	96	2400	42	1050	84	2100
48	1200	102	2550	48	1200	90	2250
54	1350	108	2700	54	1350	96	2400
60	1500	114	2850	60	1500	102	2550
72	1800	126	3150	72	1800	114	2850
84	2100	138	3450	84	2100	126	3150
96	2400	150	3750	96	2400	138	3450
108	2700	162	4050	108	2700	150	3750
120	3000	174	4350	120	3000	162	4050

* For special extra long pole length requirements a Pole Extender Kit (#76024) is available that provides 30" (750mm) of extended pole length. Pole Diameter – 2-7/8" (73mm). (155)

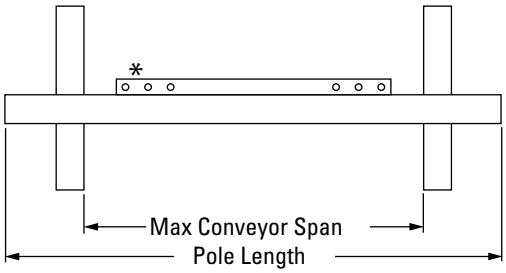

*Each pole size can be used with a blade size down to 18" (450mm) in 6" (150mm) increments

Clearance Guidelines for Installation

HORIZONTAL CLEARANCE REQUIRED		VERTICAL CLEARANCE REQUIRED	
in.	mm	in.	mm
8	200	19.5	488

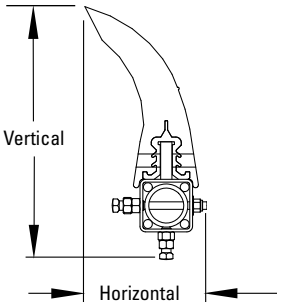

Spring Length Chart

Blade Width	White Springs	Silver Springs	Red Springs
18"	5 5/8"	N/A	N/A
24"	5 3/8"	6 1/4"	N/A
30"	5"	6"	6 1/4"
36"	4 3/4"	6"	6 1/4"
42"	N/A	5 7/8"	6 1/8"
48"	N/A	5 3/4"	6 1/8"
54"	N/A	5 5/8"	6"
60"	N/A	5 5/8"	6"
66"	N/A	5 1/2"	5 7/8"
72"	N/A	5 3/8"	5 7/8"
78"	N/A	5 3/8"	5 3/4"
84"	N/A	N/A	5 3/4"
90"	N/A	N/A	5 5/8"
96"	N/A	N/A	5 5/8"
102"	N/A	N/A	5 1/2"
108"	N/A	N/A	5 1/2"
114"	N/A	N/A	5 3/8"

Shading indicates preferred spring option.

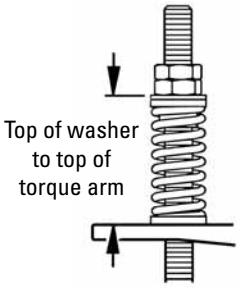

Pressure Chart (PAT)

Blade Width	PSI
18"	8#
24"	10#
30"	13#
36"	15#
42"	18#
48"	20#
54"	23#
60"	25#
66"	28#
72"	31#
78″	33#
84″	36#
90″	38#
96"	41#
102"	43#
108"	46#
114"	48#

Specifications:

- Maximum Belt Speed .....1500 FPM (7.5M/sec)
- Temperature Rating .....-30°F to 180°F (-35°C to 82°C)
- Minimum Pulley Diameter.....20" (500mm)
- Blade Height.....12.25" (306mm)
- Usable Blade Wear Length.....8" (200mm)
- Blade Material .....Polyurethane 90 durometer (proprietary blend for abrasion resistance and long wear)
- Available for Belt Widths .....24" to 120" (600 to 3000mm). Other sizes available upon request.
- CEMA Cleaner Rating .....Class 5

Pole Location Specs

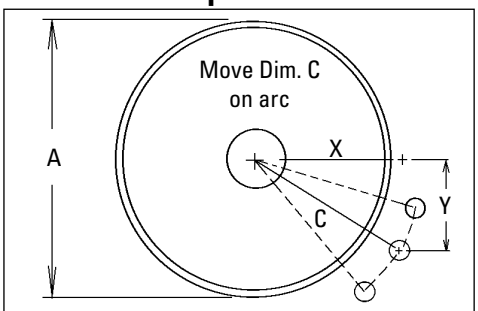

A = Pulley Diameter + Lagging and Belt
C = Critical Spec to move location if necessary

X & Y Chart for Pole Location

Pulley Diameter (including belt and lagging)	X	Y	C
20"	10"	14-3/8"	17-1/2"
21"	10-1/2"	14-3/8"	17-3/4"
22"	11"	14-3/8"	18-1/8"
23"	11-1/2"	14-3/8"	18-3/8"
24"	12"	14-3/8"	18-3/4"
25"	12-1/2"	14-3/8"	19"
26"	13"	14-3/8"	19-3/8"
27"	13-1/2"	14-3/8"	19-3/4"
28"	14"	14-3/8"	20-1/8"
29"	14-1/2"	14-3/8"	20-3/8"
30"	15"	14-3/8"	20-3/4"
31"	15-1/2"	14-3/8"	21-1/8"
32"	16"	14-3/8"	21-1/2"
33"	16-1/2"	14-3/8"	21-7/8"
34"	17"	14-3/8"	22-1/4"
35"	17-1/2"	14-3/8"	22-5/8"
36"	18"	14-3/8"	23"
37"	18-1/2"	14-3/8"	23-3/8"
38"	19"	14-3/8"	23-7/8"
39"	19-1/2"	14-3/8"	24-1/4"
40"	20"	14-3/8"	24-5/8"
41"	20-1/2"	14-3/8"	25"
42"	21"	14-3/8"	25-1/2"
43"	21-1/2"	14-3/8"	25-7/8"
44"	22"	14-3/8"	26-1/2"

X & Y Chart for Pole Location

Pulley Diameter (including belt and lagging)	X	Y	C
45"	22-1/2"	14-3/8"	27 "
46"	23"	14-3/8"	27 1/2"
47"	23-1/2"	14-3/8"	28"
48"	24"	14-3/8"	28 1/2"
49"	24-5/8"	14-3/8"	29"
50"	25-1/8"	14-3/8"	29 1/2"
51"	25-3/4"	14-3/8"	30"
52"	26-3/8"	14-3/8"	30 1/2"
53"	26-7/8"	14-3/8"	31"
54"	27-1/2"	14-3/8"	31 1/2"
55"	28-1/8"	14-3/8"	32"
56"	28-5/8"	14-3/8"	32 1/2"
57"	29-1/8"	14-3/8"	33"
58"	29-3/4"	14-3/8"	33 1/2"
59"	30-1/4"	14-3/8"	34"
60"	30-7/8"	14-3/8"	34 1/2"
61"	31-3/8"	14-3/8"	35"
62"	31-7/8"	14-3/8"	35 1/2"
63"	32-1/2"	14-3/8"	36"
64"	33"	14-3/8"	36 1/2"
65"	33-1/2"	14-3/8"	37"
66"	34-1/8"	14-3/8"	37 1/2"
67"	34-5/8"	14-3/8"	38"
68"	35-1/8"	14-3/8"	38 1/2"
69"	35-3/4"	14-3/8"	39"

X & Y Chart for Pole Location

Pulley Diameter (including belt and lagging)	X	Y	C
70"	36-1/4"	14-3/8"	39 1/2"
71"	36-3/4"	14-3/8"	40"
72"	37-3/8"	14-3/8"	40 1/2"
73"	37-7/8"	14-3/8"	41"
74"	38-3/8"	14-3/8"	41 1/2"
75"	38-7/8"	14-3/8"	42"
76"	39-1/2"	14-3/8"	42 1/2"
77"	40"	14-3/8"	43"
78"	40-1/2"	14-3/8"	43 1/2"
79"	41"	14-3/8"	44"
80"	41-5/8"	14-3/8"	44 1/2"
81"	42-1/8"	14-3/8"	45"
82"	42-5/8"	14-3/8"	45 1/2"
83"	43-1/8"	14-3/8"	46"
84"	43-3/4"	14-3/8"	46 1/2"

Replacement Parts List

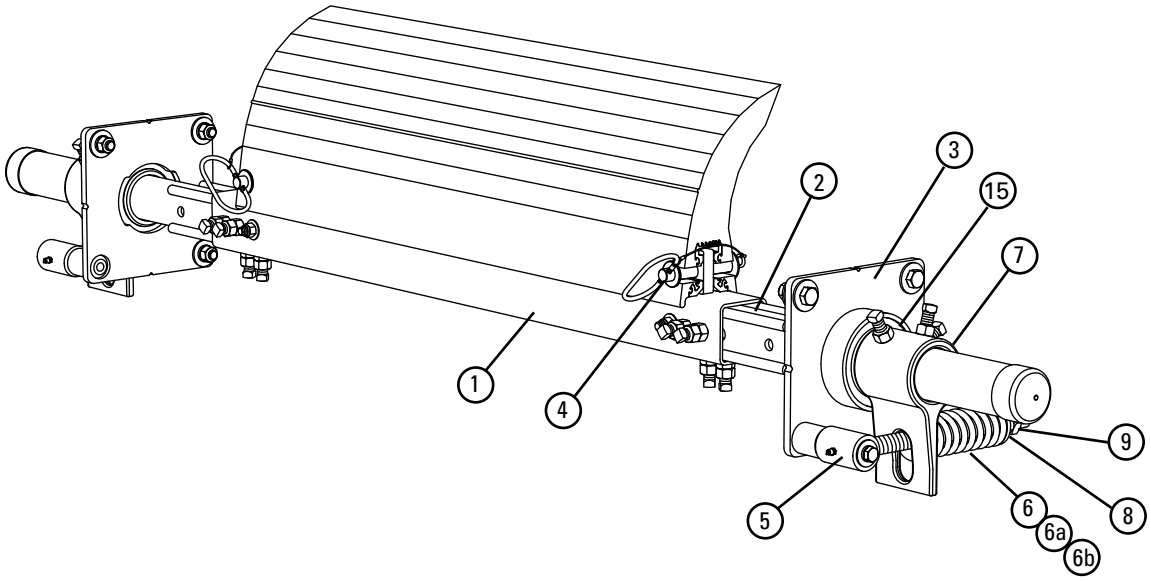

Replacement Parts

REF	DESCRIPTION	ORDERING NUMBER	ITEM CODE	WT. LBS.
1	24" (600mm) Center Pole	MMPCP24	76458	34.4
	30" (750mm) Center Pole	MMPCP30	76459	43.0
	36" (900mm) Center Pole	MMPCP36	76460	51.6
	42" (1050mm) Center Pole	MMPCP42	76461	60.1
	48" (1200mm) Center Pole	MMPCP48	76462	68.7
	54" (1350mm) Center Pole	MMPCP54	76463	77.3
	60" (1500mm) Center Pole	MMPCP60	76464	85.9
	72" (1800mm) Center Pole	MMPCP72	76465	103.1
	84" (2100mm) Center Pole	MMPCP84	76808	120.3
	96" (2400mm) Center Pole	MMPCP96	77722	137.5
	108" (2700mm) Center Pole	MMPCP108	90326	154.7
	120" (3000mm) Center Pole	MMPCP120	90327	171.9
2	Extender Pole Kit (2 ea.)	MHP-EP	76392	54.0
3	Mounting Plate Kit* (2 ea.)	MHPMPK	77727	44.4
4	Blade Pin Kit* (1 ea.)	MHPBPK	77728	0.8
5	Torque Pivot Kit* (1 ea.)	PTPK	75897	7.0
6	Tension Spring - White (1 ea.) for blades 18" - 42" (450 - 1050mm)	PSTS-W	75898	1.7
6a	Tension Spring - Silver (1 ea.) for blades 48" - 78" (1200 - 1950mm)	PSTS-S	75899	3.0
6b	Tension Spring – Red (1 ea.) for blades 84" - 114" (2100 - 2850mm)	PSTS-R	77726	4.3
7	Torque Arm Kit* (1 ea.)	PSTA	75896	11.4
8	Bushing Kit (2 ea.)	QMTBK-W	76098	0.2
9	Jam Nut Kit PST Tensioner	JNK-D	79894	0.3
-	PST Spring Tensioner* – White (incl. 2 ea. Items 3, 5, 6, 7, & 8) for blades 18" - 42" (450 - 1050mm)	PST2-W	77723	86.1
-	PST Spring Tensioner* – Silver (incl. 2 ea. Items 3, 5, 6a, 7, & 8) for blades 48" - 78" (1200 - 1950mm)	PST2-S	77724	87.4
-	PST Spring Tensioner* – Red (incl. 2 ea. Items 3, 5, 6b, 7 & 8) for blades 84" - 114" (2100 - 2850mm)	PST2-R	77725	88.8

*Hardware Included
Lead Time: 1 working day

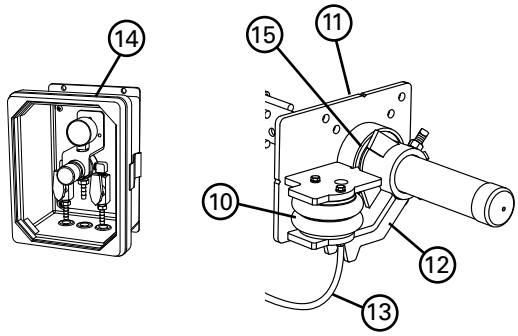

PAT Air & Nitrogen Tensioner Replacement Parts

REF	DESCRIPTION	ORDERING NUMBER	ITEM CODE	WT. LBS.
10	Air/Water Bag (1 ea.)	AWTB	75905	3.8
11	Mounting Base (1 ea.)	AWTMB	75906	22.9
12	Torque Arm * (1 ea.)	AWTA	75907	11.6
13	Hose Kit (50' of hose and 6 hose clamps)	AWTHK	75909	6.7
14	PAT Control Box 60 psi	PACB60	78683	11.0
15	Pole Bearing Assy (for cleaners shipped after 4/2016)	AWTPBA	90000	2.3
-	PAT Kit- AWT Tensioner w/Control Box (includes 2 ea. Items 10, 11, 12 & 1 ea. Items 13, 14)	PAK	78705	86.2
-	AWT Air/Water Tensioner w/o Control Box (includes 2 each items 10, 11, 12 & 1 each item 13)	AWTNCB	76069	75.2

*Hardware Included
Lead time: 1 working day

Spring Tensioner Selection Chart

CLEANER BLADE WIDTH	77723 PST2-W	77724 PST2-S	77725 PST2-R
MegaShear 18" - 42" (450 - 1050mm)	X		
MegaShear 48" - 78" (1200 - 1950mm)		X	
MegaShear 84" - 114" (2100 - 2850mm)			X

Product Ordering Information

MHP
Mine Tough Heavy-Duty Precleaner, Underground

MHP Heavy-Duty UG Precleaner Belt Width Minus 6" (150mm)

BELT WIDTH		BLADE WIDTH		ORDERING NUMBER	ITEM CODE	WT. LBS.
in.	mm	in.	mm			
48	1200	42	1050	MHP-648-UG	92061	393.5
54	1350	48	1200	MHP-654-UG	92062	411.4
60	1500	54	1350	MHP-660-UG	92063	428.0
72	1800	66	1650	MHP-672-UG	92064	484.3
84	2100	78	1950	MHP-684-UG	92065	521.6
96	2400	90	2250	MHP-696-UG	92066	559.9
108	2700	102	2550	MHP-6108-UG	92067	597.2
120	3000	114	2850	MHP-6120-UG	93440	634.5

MHP Heavy-Duty UG Precleaner Belt Width Minus 12" (300mm)

BELT WIDTH		BLADE WIDTH		ORDERING NUMBER	ITEM CODE	WT. LBS.
in.	mm	in.	mm			
48	1200	36	900	MHP-1248-UG	92068	383.9
54	1350	42	1050	MHP-1254-UG	92069	400.5
60	1500	48	1200	MHP-1260-UG	92070	418.4
72	1800	60	1500	MHP-1272-UG	92071	474.7
84	2100	72	1800	MHP-1284-UG	92072	520.9
96	2400	84	2100	MHP-1296-UG	92073	568.1
108	2700	96	2400	MHP-12108-UG	92074	587.6
120	3000	108	2700	MHP-12120-UG	93441	624.9

MHP Heavy-Duty UG Precleaner Belt Width Minus 18" (450mm)

BELT WIDTH		BLADE WIDTH		ORDERING NUMBER	ITEM CODE	WT. LBS.
in.	mm	in.	mm			
48	1200	30	750	MHP-1848-UG	92075	374.2
54	1350	36	900	MHP-1854-UG	92076	390.9
60	1500	42	1050	MHP-1860-UG	92077	407.5
72	1800	54	1350	MHP-1872-UG	92078	465.0
84	2100	66	1650	MHP-1884-UG	92079	502.3
96	2400	78	1950	MHP-1896-UG	92080	540.6
108	2700	90	2250	MHP-18108-UG	92081	578.0
120	3000	102	2550	MHP-18120-UG	92082	615.3

MHP Heavy-Duty UG Precleaner Belt Width Minus 24" (600mm)

BELT WIDTH		BLADE WIDTH		ORDERING NUMBER	ITEM CODE	WT. LBS.
in.	mm	in.	mm			
48	1200	24	600	MHP-2448-UG	92083	364.6
54	1350	30	750	MHP-2454-UG	92084	381.2
60	1500	36	900	MHP-2460-UG	92085	397.9
72	1800	48	1200	MHP-2472-UG	92086	455.4
84	2100	60	1500	MHP-2484-UG	92087	492.7
96	2400	72	1800	MHP-2496-UG	92088	530.9
108	2700	84	2100	MHP-24108-UG	92089	568.4
120	3000	96	2400	MHP-24120-UG	92090	605.7

MHP Heavy-Duty UG Precleaner Belt Width Minus 30" (750mm)

BELT WIDTH		BLADE WIDTH		ORDERING NUMBER	ITEM CODE	WT. LBS.
in.	mm	in.	mm			
48	1200	18	450	MHP-3048-UG	92091	355.0
54	1350	24	600	MHP-3054-UG	92092	371.6
60	1500	30	750	MHP-3060-UG	92093	388.3
72	1800	42	1050	MHP-3072-UG	92094	445.8
84	2100	54	1350	MHP-3084-UG	92095	483.1
96	2400	66	1650	MHP-3096-UG	92096	521.3
108	2700	78	1950	MHP-30108-UG	92097	558.8
120	3000	90	2250	MHP-30120-UG	92098	596.1

MHP Heavy-Duty UG Precleaner Belt Width Minus 36" (900mm)

BELT WIDTH		BLADE WIDTH		ORDERING NUMBER	ITEM CODE	WT. LBS.
in.	mm	in.	mm			
54	1350	18	450	MHP-3654-UG	92099	362.0
60	1500	24	600	MHP-3660-UG	92100	378.7
72	1800	36	900	MHP-3672-UG	92101	436.2
84	2100	48	1200	MHP-3684-UG	92102	473.5
96	2400	60	1500	MHP-3696-UG	92103	511.7
108	2700	72	1800	MHP-36108-UG	92104	549.2
120	3000	84	2100	MHP-36120-UG	92105	586.5

Standard Lead time: 1 working day

Shaded items are made to order.
Lead time: 3 weeks

Optional Mounting Kits

DESCRIPTION	ORDERING NUMBER	ITEM CODE	WT. LBS.
Optional Mounting Bar Kit *	MMBK	75830	19.5
Mounting Plate Kit * (2 plates)	MMPK	76537	140.0

*Hardware Included

Product Notes:

- Recommended for heavy-duty conveyor applications.
- Material Path Option: Fit the blade width to the belt's material path. The material path is typically the center 2/3 of the belt width. In most cases a blade size of belt width minus 6" (150mm) may be the best solution.
- Each cleaner pole is retrofittable in blade sizes down to 18" (450mm) in 6" (150mm) increments.
- Pole Length: Belt width plus 96" (2400mm). For longer requirements see Installation Accessories – Pole Extender Kit (155).
- Visual Tension Check: No guesswork on blade tensioning. Measure the spring and adjust to specified length per blade width to restore optimal tensioning.
- To make cleaner installation easier and quicker, see Optional Mounting Kits (155).

Product Ordering Information

MMP
Mine Tough Heavy-Duty Precleaner, Underground with Portable Air Tensioner

MHP Heavy-Duty UG Precleaner w/PAT Belt Width Minus 6" (150mm)

BELT WIDTH		BLADE WIDTH		ORDERING NUMBER	ITEM CODE	WT. LBS.
in.	mm	in.	mm			
48	1200	42	1050	MHP-648P-UG	92106	393.7
54	1350	48	1200	MHP-654P-UG	92107	411.6
60	1500	54	1350	MHP-660P-UG	92108	428.2
72	1800	66	1650	MHP-672P-UG	92109	484.5
84	2100	78	1950	MHP-684P-UG	92110	521.8
96	2400	90	2250	MHP-696P-UG	92111	560.1
108	2700	102	2550	MHP-6108P-UG	92112	597.4
120	3000	114	2850	MHP-6120P-UG	93442	634.7

MHP Heavy-Duty UG Precleaner w/PAT Belt Width Minus 12" (300mm)

BELT WIDTH		BLADE WIDTH		ORDERING NUMBER	ITEM CODE	WT. LBS.
in.	mm	in.	mm			
48	1200	36	900	MHP-1248P-UG	92113	384.1
54	1350	42	1050	MHP-1254P-UG	92114	400.7
60	1500	48	1200	MHP-1260P-UG	92115	418.6
72	1800	60	1500	MHP-1272P-UG	92116	474.9
84	2100	72	1800	MHP-1284P-UG	92117	521.1
96	2400	84	2100	MHP-1296P-UG	92118	568.3
108	2700	96	2400	MHP-12108P-UG	92119	587.8
120	3000	108	2700	MHP-12120P-UG	93443	625.1

MHP Heavy-Duty UG Precleaner w/PAT Belt Width Minus 18" (450mm)

BELT WIDTH		BLADE WIDTH		ORDERING NUMBER	ITEM CODE	WT. LBS.
in.	mm	in.	mm			
48	1200	30	750	MHP-1848P-UG	92120	374.4
54	1350	36	900	MHP-1854P-UG	92121	391.1
60	1500	42	1050	MHP-1860P-UG	92122	407.7
72	1800	54	1350	MHP-1872P-UG	92123	465.2
84	2100	66	1650	MHP-1884P-UG	92124	502.5
96	2400	78	1950	MHP-1896P-UG	92125	540.8
108	2700	90	2250	MHP-18108P-UG	92126	578.2
120	3000	102	2550	MHP-18120P-UG	92127	615.5

MHP Heavy-Duty UG Precleaner w/PAT Belt Width Minus 24" (600mm)

BELT WIDTH		BLADE WIDTH		ORDERING NUMBER	ITEM CODE	WT. LBS.
in.	mm	in.	mm			
48	1200	24	600	MHP-2448P-UG	92128	364.8
54	1350	30	750	MHP-2454P-UG	92129	381.4
60	1500	36	900	MHP-2460P-UG	92130	398.1
72	1800	48	1200	MHP-2472P-UG	92131	455.6
84	2100	60	1500	MHP-2484P-UG	92132	492.9
96	2400	72	1800	MHP-2496P-UG	92133	531.1
108	2700	84	2100	MHP-24108P-UG	92134	568.6
120	3000	96	2400	MHP-24120P-UG	92135	605.9

MHP Heavy-Duty UG Precleaner w/PAT Belt Width Minus 30" (750mm)

BELT WIDTH		BLADE WIDTH		ORDERING NUMBER	ITEM CODE	WT. LBS.
in.	mm	in.	mm			
48	1200	18	450	MHP-3048P-UG	92136	355.2
54	1350	24	600	MHP-3054P-UG	92137	371.8
60	1500	30	750	MHP-3060P-UG	92138	388.5
72	1800	42	1050	MHP-3072P-UG	92139	446.0
84	2100	54	1350	MHP-3084P-UG	92140	483.3
96	2400	66	1650	MHP-3096P-UG	92141	521.5
108	2700	78	1950	MHP-30108P-UG	92142	559.0
120	3000	90	2250	MHP-30120P-UG	92143	596.3

MHP Heavy-Duty UG Precleaner w/PAT Belt Width Minus 36" (900mm)

BELT WIDTH		BLADE WIDTH		ORDERING NUMBER	ITEM CODE	WT. LBS.
in.	mm	in.	mm			
54	1350	18	450	MHP-3654P-UG	92144	362.2
60	1500	24	600	MHP-3660P-UG	92145	378.9
72	1800	36	900	MHP-3672P-UG	92146	436.4
84	2100	48	1200	MHP-3684P-UG	92147	473.7
96	2400	60	1500	MHP-3696P-UG	92148	511.9
108	2700	72	1800	MHP-36108P-UG	92149	549.4
120	3000	84	2100	MHP-36120P-UG	92150	586.7

Standard Lead time: 1 working day

Shaded items are made to order.
Lead time: 3 weeks

Optional Mounting Kits

DESCRIPTION	ORDERING NUMBER	ITEM CODE	WT. LBS.
Optional Mounting Bar Kit *	MMBK	75830	19.5
Mounting Plate Kit * (2 plates)	MMPK	76537	140.0

*Hardware Included

Product Notes:

- Recommended for heavy-duty conveyor applications.
- Material Path Option: Fit the blade width to the belt's material path. The material path is typically the center 2/3 of the belt width. In most cases a blade size of belt width minus 6" (150mm) may be the best solution.
- Each cleaner pole is retrofittable in blade sizes down to 18" (450mm) in 6" (150mm) increments.
- Pole Length: Belt width plus 96" (2400mm). For longer requirements see Installation Accessories – Pole Extender Kit (155).
- Visual Tension Check: No guesswork on blade tensioning. Measure the spring and adjust to specified length per blade width to restore optimal tensioning.
- To make cleaner installation easier and quicker, see Optional Mounting Kits (155).

Product Ordering Information

Air Tanks

ORDERING NUMBER	ITEM CODE	WT. LBS.
PAT1	78684	13.0
PAT2	78685	13.0

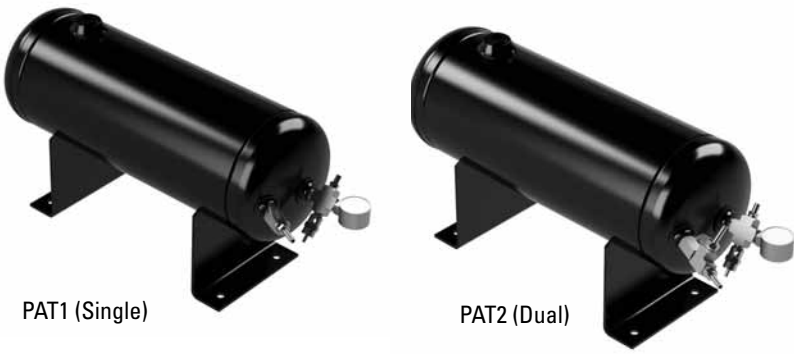

PAT1 (Single)

PAT2 (Dual)

Replacement Parts List

REF	DESCRIPTION	ORDERING NUMBER	ITEM CODE	WT. LBS.
1	Tank Label Kit	PATLK	78791	0.1
2	Tank Hose Kit (incl. 1 ea. 10' hose and 1' poly spiral wrap, 2 hose clamps)	PATHK	78794	1.5

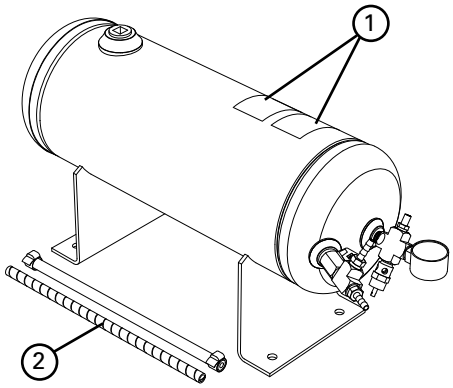

Product Notes:

- For use with PAT cleaner assemblies and PAT control box.
- Single for applications with one cleaner, double for applications with two cleaners.
- 150# pop-off valve for safe pressurizing/charging of Air Tank.
- ASME construction.

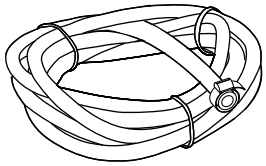

Air Line Connection for Site-Accessible Air

ORDERING NUMBER	ITEM CODE	WT. LBS.
PATHK*	78794	1.5

* incl. 10' hose, 1' poly spiral wrap, 2 hose clamps

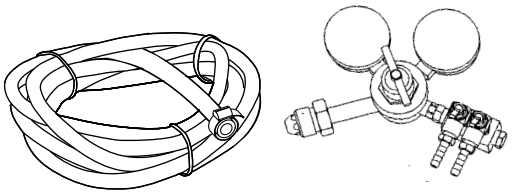

Nitrogen Tank Connection for Site-Provided Nitrogen Tank

ORDERING NUMBER	ITEM CODE	WT. LBS.
PANK*	78799	5.0

* incl. Nitrogen Regulator, 10' hose, 2 hose clamps

Product Ordering Information

Ordering Information
MegaShear™ Replacement Blades

BLADE WIDTH		ORDERING NUMBER	ITEM CODE	WT. LBS
in.	mm			
18	450	MRB18	77531	28.9
24	600	MRB24	77532	38.5
30	750	MRB30	77533	48.1
36	900	MRB36	77534	57.8
42	1050	MRB42	77535	67.4
48	1200	MRB48	77536	77.0
54	1350	MRB54	77537	86.6
60	1500	MRB60	77538	96.3
66	1650	MRB66	77539	105.9
72	1800	MRB72	77540	115.5
78	1950	MRB78	77541	125.1
84	2100	MRB84	77542	134.7
90	2250	MRB90	77543	144.3
96	2400	MRB96	77544	153.9
102	2550	MRB102	77545	163.5
108	2700	MRB108	77546	173.1
114	2850	MRB114	77547	182.7

Other blade sizes available upon request.
Lead time: 1 working day

Match blade width to belt's material path

Belt Width Minus 6" (150mm)

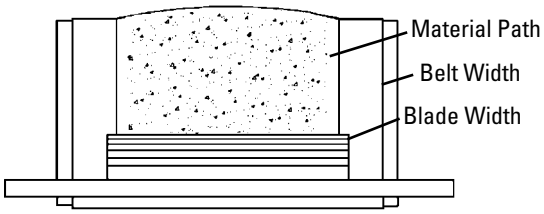

Belt Width Minus 12" (300mm)

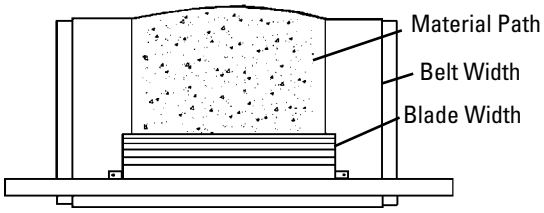

Belt Width Minus 18" (450mm)

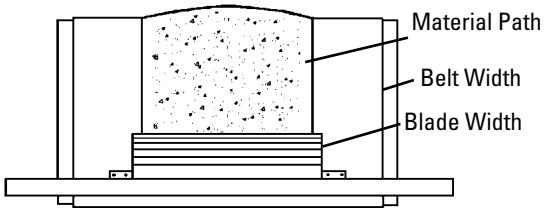

Belt Width Minus 24" (600mm)

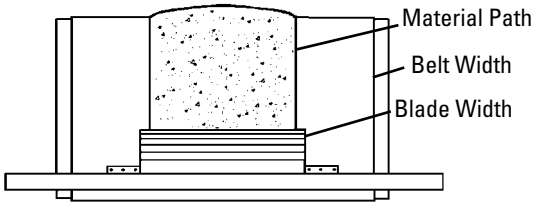

Product Notes:

- A molded-in wear line indicates when the blade is worn out and needs to be replaced.
- Faceted blade profile: Renews its cleaning edge as the blade wears.
- MegaShear™ blades are made of a special long-wearing polyurethane.
- Quick blade replacement: Pull one pin, remove the old blade and slide the new one in.

Pole Length Specifications*

CLEANER SIZE		MAX OVERALL POLE LENGTH		CENTER POLE LENGTH		MAXIMUM CONVEYOR SPAN	
in.	mm	in.	mm	in.	mm	in.	mm
48	1200	144	3600	54	1350	132	3300
54	1350	150	3750	60	1500	138	3450
60	1500	156	3900	66	1650	144	3600
72	1800	168	4200	78	1950	156	3900
84	2100	180	4500	90	2250	168	4200
96	2400	192	4800	102	2550	180	4500
108	2700	204	5100	114	2850	192	4800
120	3000	216	4350	126	3150	204	5100

* For special extra long pole length requirements a Pole Extender Kit (#76024) is available that provides 30" (750mm) of extended pole length. Pole Diameter – 2-7/8" (73mm). (155)

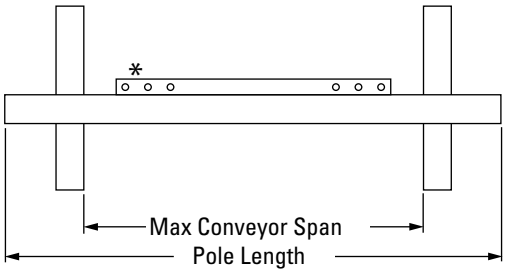

*Each pole size can be used with a blade size down to 18" (450mm) in 6" (150mm) increments

Clearance Guidelines for Installation

HORIZONTAL CLEARANCE REQUIRED		VERTICAL CLEARANCE REQUIRED	
in.	mm	in.	mm
8	200	19.5	488

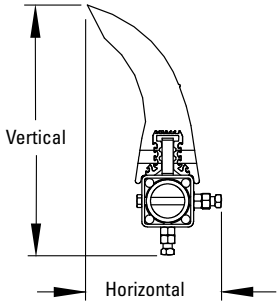

Spring Length Chart

Blade Width	White Springs	Silver Springs	Red Springs
18"	5 5/8"	N/A	N/A
24"	5 3/8"	6 1/4"	N/A
30"	5"	6"	6 1/4"
36"	4 3/4"	6"	6 1/4"
42"	N/A	5 7/8"	6 1/8"
48"	N/A	5 3/4"	6 1/8"
54"	N/A	5 5/8"	6"
60"	N/A	5 5/8"	6"
66"	N/A	5 1/2"	5 7/8"
72"	N/A	5 3/8"	5 7/8"
78"	N/A	5 3/8"	5 3/4"
84"	N/A	N/A	5 3/4"
90"	N/A	N/A	5 5/8"
96"	N/A	N/A	5 5/8"
102"	N/A	N/A	5 1/2"
108"	N/A	N/A	5 1/2"
114"	N/A	N/A	5 3/8"

Shading indicates preferred spring option.

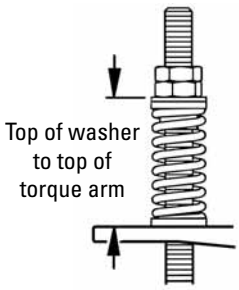

Pressure Chart (PAT)

Blade Width	PSI
18"	8#
24"	10#
30"	13#
36"	15#
42"	18#
48"	20#
54"	23#
60"	25#
66"	28#
72"	31#
78"	33#
84"	36#
90"	38#
96"	41#
102"	43#
108"	46#
114"	48#

Specifications:

- Maximum Belt Speed .....1500 FPM (7.5M/sec)
- Temperature Rating .....-30°F to 180°F (-35°C to 82°C)
- Minimum Pulley Diameter.....20" (500mm)
- Blade Height.....12.25" (306mm)
- Usable Blade Wear Length.....8" (200mm)
- Blade Material .....Polyurethane (proprietary blend for abrasion resistance and long wear)
- Available for Belt Widths .....48" to 120" (1200 to 3000mm). Other sizes available upon request.
- CEMA Cleaner Rating .....Class 5

Pole Location Specs

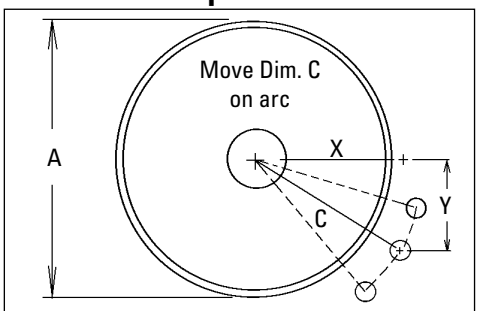

A = Pulley Diameter + Lagging and Belt
C = Critical Spec to move location if necessary

X & Y Chart for Pole Location

Pulley Diameter (including belt and lagging)	X	Y	C
20"	10"	14-3/8"	17-1/2"
21"	10-1/2"	14-3/8"	17-3/4"
22"	11"	14-3/8"	18-1/8"
23"	11-1/2"	14-3/8"	18-3/8"
24"	12"	14-3/8"	18-3/4"
25"	12-1/2"	14-3/8"	19"
26"	13"	14-3/8"	19-3/8"
27"	13-1/2"	14-3/8"	19-3/4"
28"	14"	14-3/8"	20-1/8"
29"	14-1/2"	14-3/8"	20-3/8"
30"	15"	14-3/8"	20-3/4"
31"	15-1/2"	14-3/8"	21-1/8"
32"	16"	14-3/8"	21-1/2"
33"	16-1/2"	14-3/8"	21-7/8"
34"	17"	14-3/8"	22-1/4"
35"	17-1/2"	14-3/8"	22-5/8"
36"	18"	14-3/8"	23"
37"	18-1/2"	14-3/8"	23-3/8"
38"	19"	14-3/8"	23-7/8"
39"	19-1/2"	14-3/8"	24-1/4"
40"	20"	14-3/8"	24-5/8"
41"	20-1/2"	14-3/8"	25"
42"	21"	14-3/8"	25-1/2"
43"	21-1/2"	14-3/8"	25-7/8"
44"	22"	14-3/8"	26-1/2"

X & Y Chart for Pole Location

Pulley Diameter (including belt and lagging)	X	Y	C
45"	22-1/2"	14-3/8"	27 "
46"	23"	14-3/8"	27 1/2"
47"	23-1/2"	14-3/8"	28"
48"	24"	14-3/8"	28 1/2"
49"	24-5/8"	14-3/8"	29"
50"	25-1/8"	14-3/8"	29 1/2"
51"	25-3/4"	14-3/8"	30"
52"	26-3/8"	14-3/8"	30 1/2"
53"	26-7/8"	14-3/8"	31"
54"	27-1/2"	14-3/8"	31 1/2"
55"	28-1/8"	14-3/8"	32"
56"	28-5/8"	14-3/8"	32 1/2"
57"	29-1/8"	14-3/8"	33"
58"	29-3/4"	14-3/8"	33 1/2"
59"	30-1/4"	14-3/8"	34"
60"	30-7/8"	14-3/8"	34 1/2"
61"	31-3/8"	14-3/8"	35"
62"	31-7/8"	14-3/8"	35 1/2"
63"	32-1/2"	14-3/8"	36"
64"	33"	14-3/8"	36 1/2"
65"	33-1/2"	14-3/8"	37"
66"	34-1/8"	14-3/8"	37 1/2"
67"	34-5/8"	14-3/8"	38"
68"	35-1/8"	14-3/8"	38 1/2"
69"	35-3/4"	14-3/8"	39"

X & Y Chart for Pole Location

Pulley Diameter (including belt and lagging)	X	Y	C
70"	36-1/4"	14-3/8"	39 1/2"
71"	36-3/4"	14-3/8"	40"
72"	37-3/8"	14-3/8"	40 1/2"
73"	37-7/8"	14-3/8"	41"
74"	38-3/8"	14-3/8"	41 1/2"
75"	38-7/8"	14-3/8"	42"
76"	39-1/2"	14-3/8"	42 1/2"
77"	40"	14-3/8"	43"
78"	40-1/2"	14-3/8"	43 1/2"
79"	41"	14-3/8"	44"
80"	41-5/8"	14-3/8"	44 1/2"
81"	42-1/8"	14-3/8"	45"
82"	42-5/8"	14-3/8"	45 1/2"
83"	43-1/8"	14-3/8"	46"
84"	43-3/4"	14-3/8"	46 1/2"

Replacement Parts List

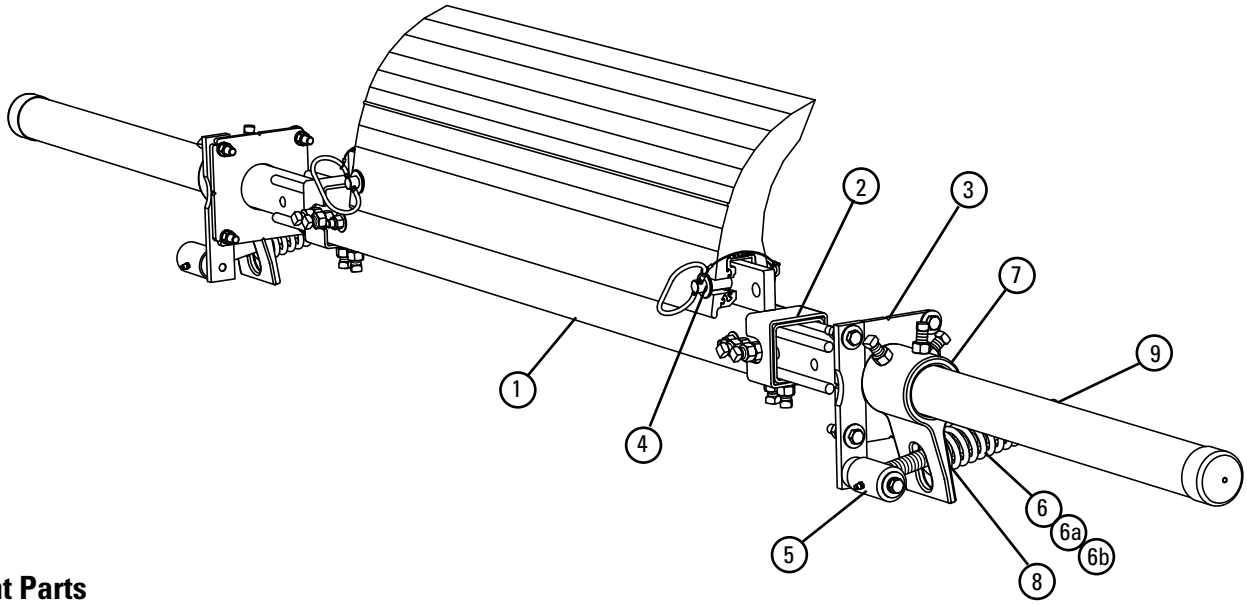

Replacement Parts

REF	DESCRIPTION	ORDERING NUMBER	ITEM CODE	WT. LBS.
1	48" (1200mm) Center Pole	MMPCP48	76462	68.7
	54" (1350mm) Center Pole	MMPCP54	76463	77.3
	60" (1500mm) Center Pole	MMPCP60	76464	85.9
	72" (1800mm) Center Pole	MMPCP72	76465	103.1
	84" (2100mm) Center Pole	MMPCP84	76808	120.3
	96" (2400mm) Center Pole	MMPCP96	77722	137.5
	108" (2700mm) Center Pole	MMPCP108	90326	154.7
	120" (3000mm) Center Pole	MMPCP120	90327	171.9
2	Extender Pole Kit (2 ea.)	MHP-EP	76392	54.0
3	Mounting Plate Kit* (2 ea.)	MHPMPK	77727	44.4
4	Blade Pin Kit* (1 ea.)	MHPBPK	77728	0.8
5	Torque Pivot Kit* (1 ea.)	PTPK	75897	7.0
6	Tension Spring - White (1 ea.) for blades 18" - 42" (450 - 1050mm)	PSTS-W	75898	1.7
6a	Tension Spring - Silver (1 ea.) for blades 48" - 78" (1200 - 1950mm)	PSTS-S	75899	3.0
6b	Tension Spring – Red (1 ea.) for blades 84" - 114" (2100 - 2850mm)	PSTS-R	77726	4.3
7	Torque Arm Kit* (1 ea.)	PSTA	75896	11.4
8	Bushing Kit (2 ea.)	QMTBK-W	76098	0.2
9	Jam Nut Kit PST Tensioner	JNK-D	79894	0.3
-	PST Spring Tensioner* – White (incl. 2 ea. Items 3, 5, 6, 7, & 8) for blades 18" - 42" (450 - 1050mm)	PST2-W	77723	86.1
-	PST Spring Tensioner* – Silver (incl. 2 ea. Items 3, 5, 6a, 7, & 8) for blades 48" - 78" (1200 - 1950mm)	PST2-S	77724	87.4
-	PST Spring Tensioner* – Red (incl. 2 ea. Items 3, 5, 6b, 7 & 8) for blades 84" - 114" (2100 - 2850mm)	PST2-R	77725	88.8

*Hardware Included
Lead Time: 1 working day

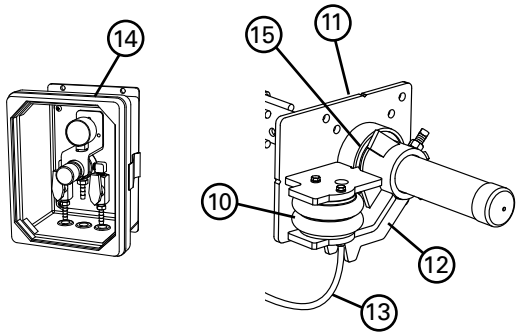

PAT Air & Nitrogen Tensioner Replacement Parts

REF	DESCRIPTION	ORDERING NUMBER	ITEM CODE	WT. LBS.
10	Air/Water Bag (1 ea.)	AWTB	75905	3.8
11	Mounting Base (1 ea.)	AWTMB	75906	22.9
12	Torque Arm * (1 ea.)	AWTA	75907	11.6
13	Hose Kit (50' of hose and 6 hose clamps)	AWTHK	75909	6.7
14	PAT Control Box 60 psi	PACB60	78683	11.0
15	Pole Bearing Assy (for cleaners shipped after 4/2016)	AWTPBA	90000	2.3
-	PAT Kit- AWT Tensioner w/Control Box (includes 2 ea. Items 10, 11, 12 & 1 ea. Items 13, 14)	PAK	78705	86.2
-	AWT Air/Water Tensioner w/o Control Box (includes 2 each items 10, 11, 12 & 1 each item 13)	AWTNCB	76069	75.2

*Hardware Included
Lead time: 1 working day

Spring Tensioner Selection Chart

CLEANER BLADE WIDTH	77723 PST2-W	77724 PST2-S	77725 PST2-R
MegaShear 18" - 42" (450 - 1050mm)	X		
MegaShear 48" - 78" (1200 - 1950mm)		X	
MegaShear 84" - 114" (2100 - 2850mm)			X

Product Ordering Information

MHCP HD Cartridge Precleaner with Spring Tensioner (PST)

BELT WIDTH		BLADE COVERAGE		ORDERING NUMBER	ITEM CODE	WT. LBS.
in.	mm	in.	mm			
24	600	18	450	MHCP-24S	75929	192.1
30	750	24	600	MHCP-30S	75930	207.2
36	900	30	750	MHCP-36S	75931	222.4
42	1050	36	900	MHCP-42S	75932	237.4
48	1200	42	1050	MHCP-48S	75933	252.5
54	1350	48	1200	MHCP-54S	75934	267.6
60	1500	54	1350	MHCP-60S	75935	282.7
72	1800	66	1650	MHCP-72S	75936	312.8
84	2100	78	1950	MHCP-84S	76800	364.9
96	2400	90	2250	MHCP-96S	78955	417.0

Lead time: 1 working day

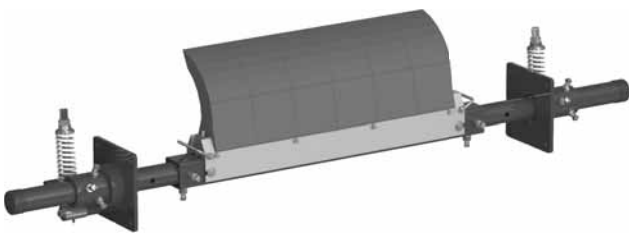

MHCP HD Cartridge Precleaner with Portable Air Tensioner (PAT)

BELT WIDTH		BLADE COVERAGE		ORDERING NUMBER	ITEM CODE	WT. LBS.
in.	mm	in.	mm			
24	600	18	450	MHCP-24P	78723	192.2
30	750	24	600	MHCP-30P	78724	207.3
36	900	30	750	MHCP-36P	78725	222.4
42	1050	36	900	MHCP-42P	78726	237.4
48	1200	42	1050	MHCP-48P	78727	252.5
54	1350	48	1200	MHCP-54P	78728	267.6
60	1500	54	1350	MHCP-60P	78729	282.7
72	1800	66	1650	MHCP-72P	78730	312.8
84	2100	78	1950	MHCP-84P	78731	364.9
96	2400	90	2250	MHCP-96P	78959	417.0

Lead time: 1 working day

Tank sold separately.
See 70 for options.

Optional Mounting Kits

DESCRIPTION	ORDERING NUMBER	ITEM CODE	WT. LBS.
Optional Mounting Bar Kit *	MMBK	75830	19.5
Mounting Plate Kit * (2 plates)	MMPK	76537	140.0

*Hardware Included
Lead time: 1 working day

Product Notes:

- Heavy-duty design with massive SuperShear™ blades for constant cleaning power on abusive beltlines.
- Blade width equals belt width minus 6" (150mm). Can be adjusted to belt's material path.
- Pole Length: Belt width plus 58" (1450mm). For longer requirements see Installation Accessories - Pole Extender Kit (155).
- Tensioner Options: 1) PST Spring Tensioner for self-adjusting tensioning with easy retensioning adjustments; 2) AWT Air/Water Tensioner for automatic tensioning throughout the life of the blades; 3) NT Nitrogen Tensioner for automatic tensioning with a nitrogen tank; 4) Portable Air Tensioner used for constant, automatic tension throughout the life of the blades. Can be used with site available air lines or with the add-on air tank.
- To make cleaner installation easier and quicker, see Optional Mounting Kits (155)

Product Ordering Information

Air Tanks

ORDERING NUMBER	ITEM CODE	WT. LBS.
PAT1	78684	13.0
PAT2	78685	13.0

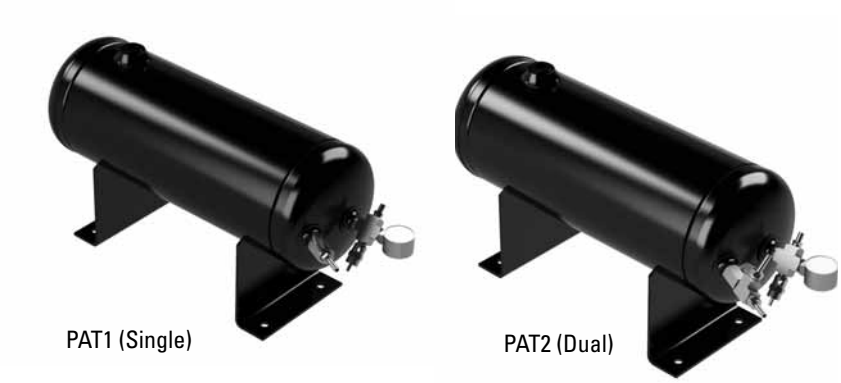

Replacement Parts List

REF	DESCRIPTION	ORDERING NUMBER	ITEM CODE	WT. LBS.
1	Tank Label Kit	PATLK	78791	0.1
2	Tank Hose Kit (incl. 1 ea. 10' hose and 1' poly spiral wrap, 2 hose clamps)	PATHK	78794	1.5

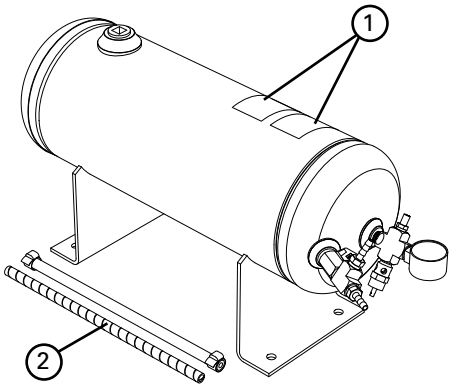

Product Notes:

- For use with PAT cleaner assemblies and PAT control box.
- Single for applications with one cleaner, double for applications with two cleaners.
- 150# pop-off valve for safe pressurizing/charging of Air Tank.
- ASME construction.

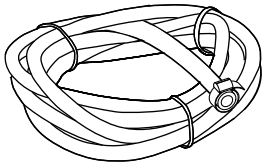

Air Line Connection for Site-Accessible Air

ORDERING NUMBER	ITEM CODE	WT. LBS.
PATHK*	78794	1.5

* incl. 10' hose, 1' poly spiral wrap, 2 hose clamps

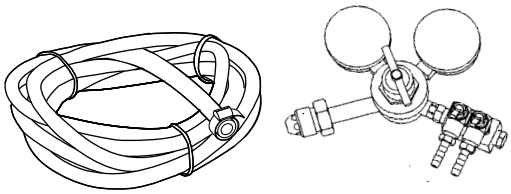

Nitrogen Tank Connection for Site-Provided Nitrogen Tank

ORDERING NUMBER	ITEM CODE	WT. LBS.
PANK*	78799	5.0

* incl. Nitrogen Regulator, 10' hose, 2 hose clamps

Optional Assemblies, Tensioners & Kits

Blade/Pole Assemblies

(Includes blades, cartridge, center pole and 2 extender poles)

BELT WIDTH		ORDERING NUMBER	ITEM CODE	WT. LBS.
in.	mm			
24	600	MHCP-BPA24	75945	106.0
30	750	MHCP-BPA30	75946	121.1
36	900	MHCP-BPA36	75947	136.2
42	1050	MHCP-BPA42	75948	151.2
48	1200	MHCP-BPA48	75949	166.3
54	1350	MHCP-BPA54	75950	181.4
60	1500	MHCP-BPA60	75951	196.5
72	1800	MHCP-BPA72	75952	226.6
84	2100	MHCP-BPA84	76809	264.4
96	2400	MHCP-BPA96	78956	302.2

Lead time: 1 working day

Tensioners

(Includes tensioners for both pole ends)

DESCRIPTION	ORDERING NUMBER	ITEM CODE	WT. LBS.
PST Spring Tensioner - White for belts 24" - 48" (600-1200mm)	PST2-W	77723	86.1
PST Spring Tensioner - Silver for belts 54" - 96" (1350-2400mm)	PST2-S	77724	86.2
PST Spring Tensioner - Red for belts 96" (2400mm)	PST2-R	77725	86.2
PAT Kit- PAT Tensioner	PAK	78705	86.2

Lead time: 1 working day

PST Spring Tensioner

PAT AirTensioner and Control Box

Blade Cartridge Kits

(Includes blades, cartridge, and mounting bolts)

BELT WIDTH		ORDERING NUMBER	ITEM CODE	WT. LBS.
in.	mm			
24	600	MHCP-BCK24	75953	33.0
30	750	MHCP-BCK30	75954	44.0
36	900	MHCP-BCK36	75955	55.0
42	1050	MHCP-BCK42	75956	66.0
48	1200	MHCP-BCK48	75957	77.0
54	1350	MHCP-BCK54	75958	88.0
60	1500	MHCP-BCK60	75959	99.0
72	1800	MHCP-BCK72	75960	121.0
84	2100	MHCP-BCK84	76810	141.2
96	2400	MHCP-BCK96	78957	161.4

NOTE: For easy blade changeout, remove cartridge with worn blades and replace with new blade cartridge kit. New blades can then be installed in the old cartridge for the next changeout.
Lead time: 1 working day

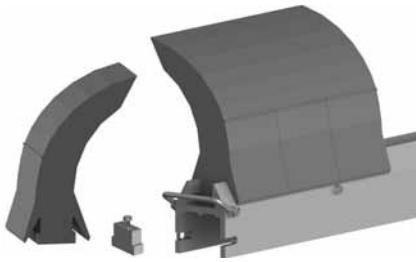

Blade Cartridge Kit

Telescoping Pole Length Specifications

CLEANER SIZE		MAX OVERALL POLE LENGTH		CENTER POLE LENGTH		MAXIMUM CONVEYOR SPAN	
in.	mm	in.	mm	in.	mm	in.	mm
24	600	82	2050	28	700	66	1650
30	750	88	2200	34	850	72	1800
36	900	94	2350	40	1000	78	1950
42	1050	100	2500	46	1150	84	2100
48	1200	106	2650	52	1300	90	2250
54	1350	112	2800	58	1450	96	2400
60	1500	118	2950	64	1600	102	2550
72	1800	130	3250	76	1900	114	2850
84	2100	142	3550	88	2200	126	3150
96	2400	154	3850	100	2500	138	3450

Pole Diameter - 2-7/8" (73mm)

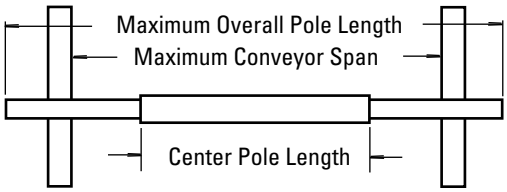

Pole Location Specs

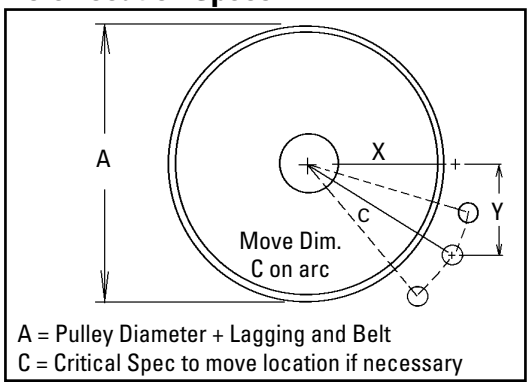

A = Pulley Diameter + Lagging and Belt
C = Critical Spec to move location if necessary

Clearance Guidelines for Installation

HORIZONTAL CLEARANCE REQUIRED		VERTICAL CLEARANCE REQUIRED	
in.	mm	in.	mm
7	175	19	475

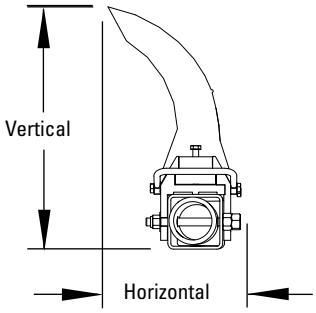

Pole Location Chart

A	X	Y	C
20"	10"	14 3/8"	17 1/2"
21"	10 1/2"	14 3/8"	17 3/4"
22"	11"	14 3/8"	18 1/8"
23"	11 1/2"	14 3/8"	18 3/8"
24"	12"	14 3/8"	18 3/4"
25"	12 1/2"	14 3/8"	19"
26"	13"	14 3/8"	19 3/8"
27"	13 1/2"	14 3/8"	19 3/4"
28"	14"	14 3/8"	20 1/8"
29"	14 1/2"	14 3/8"	20 3/8"
30"	15"	14 3/8"	20 3/4"
31"	15 1/2"	14 3/8"	21 1/8"
32"	16"	14 3/8"	21 1/2"
33"	16 1/2"	14 3/8"	21 7/8"
34"	17"	14 3/8"	22 1/4"
35"	17 1/2"	14 3/8"	22 5/8"
36"	18"	14 3/8"	23"
37"	18 1/2"	14 3/8"	23 3/8"
38"	19"	14 3/8"	23 7/8"
39"	19 1/2"	14 3/8"	24 1/4"
40"	20"	14 3/8"	24 5/8"
41"	20 1/2"	14 3/8"	25"
42"	21"	14 3/8"	25 1/2"
43"	21 1/2"	14 3/8"	25 7/8"
44"	22 1/4"	14 3/8"	26 1/2"
45"	22 7/8"	14 3/8"	27"
46"	23 1/2"	14 3/8"	27 1/2"
47"	24"	14 3/8"	28"
48"	24 5/8"	14 3/8"	28 1/2"

Spring Length Chart

Blade Width	White Springs	Silver Springs	Red Springs
18"	5 3/4"	6 3/8"	6 1/2"
24"	5 3/8"	6 1/4"	6 3/8"
30"	5 1/8"	6 1/8"	6 3/8"
36"	4 3/4"	6 1/8"	6 1/4"
42"	4 1/2"	6"	6 1/4"
48"	N/A	5 7/8"	6 1/8"
54"	N/A	5 3/4"	6 1/8"
60"	N/A	5 3/4"	6"
66"	N/A	5 5/8"	6"
72"	N/A	5 1/2"	5 7/8"
78"	N/A	5 1/8"	5 7/8"
84"	N/A	N/A	5 3/4"
90"	N/A	N/A	5 5/8"
96"	N/A	N/A	5 1/2"
102"	N/A	N/A	5 1/2"

Shading indicates preferred spring option.

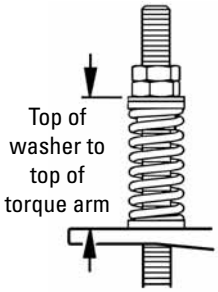

Air/Water or Nitrogen Pressure Chart

BLADE WIDTH	BLADES	PSI
18"	3	8#
24"	4	10#
30"	5	13#
36"	6	15#
42"	7	18#
48"	8	20#
54"	9	23#
60"	10	25#
66"	11	28#
72"	12	31#
78"	13	33#
84"	14	36#
90"	15	38#

PSI setting is based on the number of blades on the cleaner, not the belt width.

Specifications:

- Maximum Belt Speed ..... 1200 FPM (6M/sec)
- Temperature Rating ..... -30°F to 180°F (-35°C to 82°C)
- Minimum Pulley Diameter..... 20" (500mm)
- Blade Height..... 14" (350mm)
- Usable Blade Wear Length..... 8" (200mm)
- Blades ..... Polyurethane (proprietary blend for abrasion resistance and long wear)
- Available for Belt Widths ..... 24" to 96" (600 to 2400mm). Other sizes available upon request
- CEMA Cleaner Rating ..... Class 5

Replacement Parts List

Replacement Parts List

REF	DESCRIPTION	ORDERING NUMBER	ITEM CODE	WT. LBS.
1	24" (600mm) Center Pole *	MHP-CP24	75961	19.0
	30" (750mm) Center Pole *	MHP-CP30	75962	23.1
	36" (900mm) Center Pole *	MHP-CP36	75963	27.2
	42" (1050mm) Center Pole *	MHP-CP42	75964	31.2
	48" (1200mm) Center Pole *	MHP-CP48	75965	35.3
	54" (1350mm) Center Pole *	MHP-CP54	75966	39.4
	60" (1500mm) Center Pole *	MHP-CP60	75967	43.5
	72" (1800mm) Center Pole *	MHP-CP72	75968	51.6
	84" (2100mm) Center Pole *	MHP-CP84	76811	60.2
	96" (2400mm) Center Pole *	MHP-CP96	78958	68.8
2	MHCP Extender Poles (2 ea.)	MHP-EP	76392	54.0
3	SuperShear™ Blade	SSRB	75978	6.6
4	24" (600mm) 2-Piece Blade Cartridge *	MHCP-2BC24	76638	13.2
	30" (750mm) 2-Piece Blade Cartridge *	MHCP-2BC30	76639	17.6
	36" (900mm) 2-Piece Blade Cartridge *	MHCP-2BC36	76640	22.0
	42" (1050mm) 2-Piece Blade Cartridge *	MHCP-2BC42	76641	26.4
	48" (1200mm) 2-Piece Blade Cartridge *	MHCP-2BC48	76642	30.8
	54" (1350mm) 2-Piece Blade Cartridge *	MHCP-2BC54	76643	35.2
	60" (1500mm) 2-Piece Blade Cartridge *	MHCP-2BC60	76644	39.6
	72" (1800mm) 2-Piece Blade Cartridge *	MHCP-2BC72	76645	48.4
	84" (2100mm) 2-Piece Blade Cartridge *	MHCP-2BC84	76812	56.5
	96" (2400mm) 2-Piece Blade Cartridge *	MHCP-2BC96	78986	64.6
5	MHCP Cartridge Handle *	MHCP-CH	76393	0.4
6	MHCP Cartridge Blade Stop *	MHCP-BS	76394	0.4

*Hardware Included Lead time: 1 working day

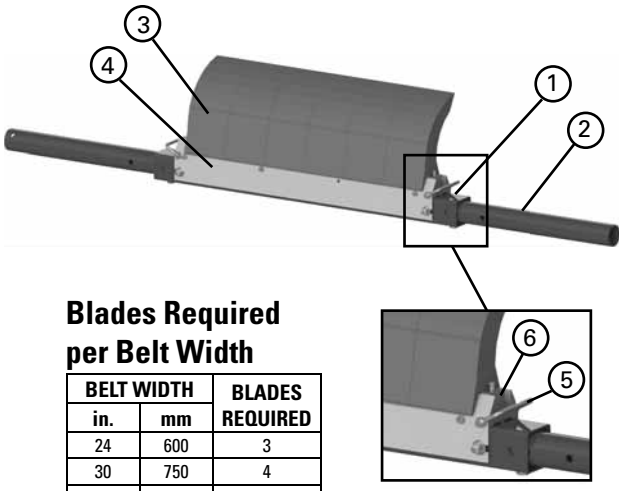

Blades Required per Belt Width

BELT WIDTH in.	BELT WIDTH mm	BLADES REQUIRED
24	600	3
30	750	4
36	900	5
42	1050	6
48	1200	7
54	1350	8
60	1500	9
72	1800	11
84	2100	13
96	2400	15

Blades and cartridges can be purchased separately (see chart at left) or preassembled as a Blade Cartridge Kit (71).

PST Spring Tensioner Replacement Parts

REF	DESCRIPTION	ORDERING NUMBER	ITEM CODE	WT. LBS.
7	Mounting Plate Kit * (2 ea.)	MHPMPK	77727	44.4
8	Torque Arm * (1 ea.)	PSTA	75896	11.4
9	Torque Pivot Kit (1 ea.) (no spring)	PTPK	75897	7.0
10	Tension Spring - White (1 ea.) for belts 24" - 48" (600-1200mm)	PSTS-W	75898	1.7
10a	Tension Spring - Silver (1 ea.) for belts 54" - 84" (1350-2100mm)	PSTS-S	75899	3.0
10b	Tension Spring - Red (1 ea.) for belts 96" (2400mm)	PSTS-R	77726	3.0
11	Bushing Kit (2 ea.) (for White, Silver, & Red Tensioners)	QMTBK-W	76098	0.2
12	Jam Nut Kit PST Tensioner	JNK-D	79894	0.3
–	PST Spring Tensioner* - White (includes 2 each items 7, 8, 9, 10 & 11) for belts 24" - 48" (600-1200mm)	PST2-W	77723	86.1
–	PST Spring Tensioner* - Silver (includes 2 each items 7, 8, 9, 10a & 11) for belts 54" -84" (1350-2100mm)	PST2-S	77724	86.2
-	PST Spring Tensioner* - Red (incl. 2 each items 7, 8, 9 ,10b &11 for belts 96" (2400mm)	PST-R	77725	86.2

*Hardware Included Lead time: 1 working day

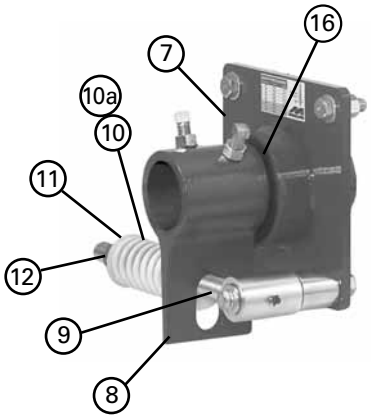

Air/Water Tensioner Replacement Parts

REF	DESCRIPTION	ORDERING NUMBER	ITEM CODE	WT. LBS.
13	Air/Water Bag (1 ea.)	AWTB	75905	3.8
14	Mounting Base (1 ea.)	AWTMB	75906	22.9
15	Torque Arm * (1 ea.)	AWTA	75907	11.6
16	Pole Bearing Assy (for cleaners shipped after 4/2016)	AWTPBA	90000	2.3
17	Hose Kit (50' of hose and 6 hose clamps)	AWTHK	75909	6.7
–	AWT Air/Water Tensioner w/o Control Box (includes 2 each items 12, 13, 14 & 1 each item 15)	AWTNCB	76069	75.2
18	PAT Control Box 60 psi	PACB60	78683	11.0
–	PAT Kit- PAT Tensioner (includes 2 each items 12, 13, 14 & 1 each items 15 & 16)	PAK	78705	86.2

*Hardware Included Lead time: 1 working day

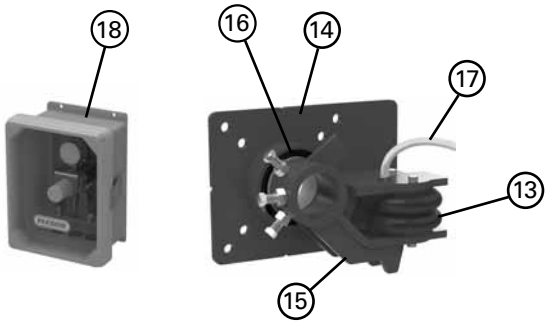

Product Ordering Information

MXP Extreme-Duty Precleaner Belt Width -6" (150mm) with Spring Tensioner (XDST)

BELT WIDTH		BLADE COVERAGE		ORDERING NUMBER	ITEM CODE	WT. LBS.
in.	mm	in.	mm			
42	1050	36	900	MXP-642	90393	659.0
48	1200	42	1050	MXP-648	90394	700.0
54	1350	48	1200	MXP-654	90395	742.0
60	1500	54	1350	MXP-660	90396	783.0
72	1800	66	1650	MXP-672	90397	869.0
84	2100	78	1950	MXP-684	90398	953.0
96	2400	90	2250	MXP-696	90399	1036.0
108	2700	102	2550	MXP-6108	90642	1120.0
120	3000	114	2850	MXP-6120	90400	1207.0

Lead time: 2 weeks

MXP Extreme-Duty Precleaner Belt Width -12" (300mm) with Spring Tensioner (XDST)

BELT WIDTH		BLADE COVERAGE		ORDERING NUMBER	ITEM CODE	WT. LBS.
in.	mm	in.	mm			
42	1050	30	750	MXP-1242	90581	636.0
48	1200	36	900	MXP-1248	90582	679.0
54	1350	42	1050	MXP-1254	90583	720.0
60	1500	48	1200	MXP-1260	90584	763.0
72	1800	60	1500	MXP-1272	90585	849.0
84	2100	72	1800	MXP-1284	90586	933.0
96	2400	84	2100	MXP-1296	90587	1016.0
108	2700	96	2400	MXP-12108	90643	1100.0
120	3000	108	2700	MXP-12120	90588	1187.0

Lead time: 2 weeks

Replacement UltraShear™ Blades

BLADE WIDTH		ORDERING NUMBER	ITEM CODE	WT. LBS.
in.	mm			
6	150	USB6	90410	20.0
12	300	USB12	90409	40.0

Lead time: 1 working day

Product Notes:

- Heavy-duty design with massive UltraShear™ blades for constant cleaning power on abusive beltlines.
- Blade width options for belt width minus 6" (150mm) or belt width minus 12" (300mm). Can be adjusted to belt's material path.
- Pole Length: Belt width plus 79" (2000mm).
- Tensioner: XDST Spring Tensioner
- To make cleaner installation easier and quicker, see Optional Mounting Kits (155).

Specifications & Guidelines

Pole Length Specifications*

CLEANER SIZE		MAX OVERALL POLE LENGTH		CENTER POLE LENGTH		MAXIMUM CONVEYOR SPAN	
in.	mm	in.	mm	in.	mm	in.	mm
42	1050	121	3050	48	1200	105	2667
48	1200	127	3200	54	1350	111	2819
54	1350	133	3350	60	1500	117	2972
60	1500	139	3500	66	1650	123	3124
72	1800	151	3800	78	1950	135	3429
84	2100	163	4100	90	2250	147	3734
96	2400	175	4400	102	2550	159	4039
108	2700	187	4700	114	2850	171	4343
120	3000	199	5000	126	3150	183	4648

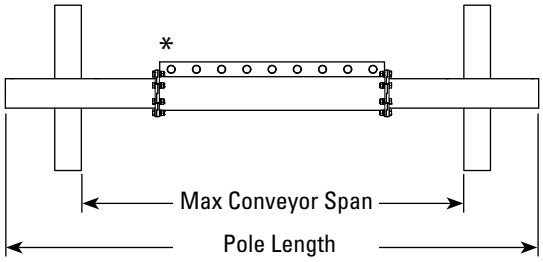

* 6" and 12" (150mm and 300mm) blade segments can be configured to match material path.

Clearance Guidelines for Installation

HORIZONTAL CLEARANCE REQUIRED		VERTICAL CLEARANCE REQUIRED	
in.	mm	in.	mm
12	300	27 1/2	700

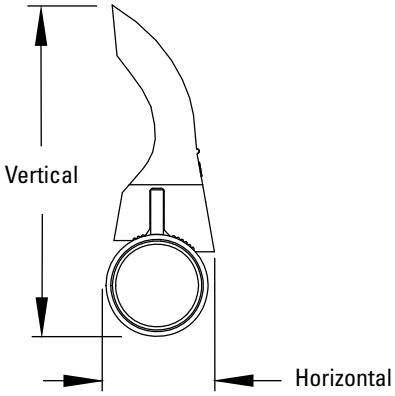

Spring Length Chart

BELT WIDTH		BLADE COVERAGE		NO. OF BLADES	PURPLE SPRINGS		WHITE SPRINGS		BLACK SPRINGS	
in.	mm	in.	mm		in.	mm	in.	mm	in.	mm
BELT WIDTH MINUS 6" (150mm)										
42	1050	36	900	3	10	255	N/A	N/A	N/A	N/A
48	1200	42	1050	3.5	9 1/2	240	10 7/8	280	N/A	N/A
54	1350	48	1200	4	9	230	10 5/8	270	N/A	N/A
60	1500	54	1350	4.5	8 1/2	215	10 3/8	265	N/A	N/A
72	1800	66	1650	5.5	7 5/8	195	9 7/8	250	N/A	N/A
84	2100	78	1950	6.5	6 3/4	170	9 3/8	240	10 3/4	270
96	2400	90	2250	7.5	5 3/4	145	8 7/8	225	10 3/8	265
108	2700	102	2550	8.5	N/A	N/A	8 3/8	210	10 1/8	255
120	3000	114	2850	9.5	N/A	N/A	7 7/8	200	9 3/4	250
BELT WIDTH MINUS 12" (300mm)										
42	1050	30	750	2.5	10 3/8	265	N/A	N/A	N/A	N/A
48	1200	36	900	3	10	255	11 1/4	285	N/A	N/A
54	1350	42	1050	3.5	9 1/2	240	10 7/8	280	N/A	N/A
60	1500	48	1200	4	9	230	10 5/8	270	N/A	N/A
72	1800	60	1500	5	8 1/8	205	10 1/8	260	N/A	N/A
84	2100	72	1800	6	7 1/8	180	9 5/8	245	N/A	N/A
96	2400	84	2100	7	6 1/4	160	9 1/8	230	10 1/2	270
108	2700	96	2400	8	N/A	N/A	8 5/8	220	10 1/4	260
120	3000	108	2700	9	N/A	N/A	8 1/8	205	9 7/8	250

Shading indicates preferred spring option.

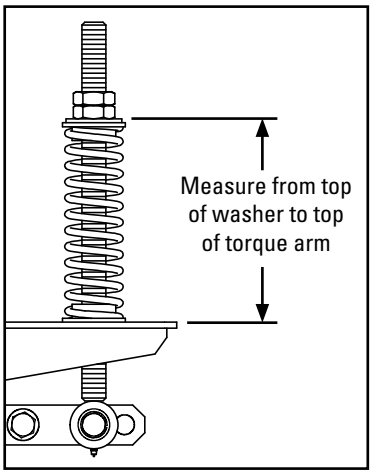

Specifications:

- Maximum Belt Speed .....2000 FPM (10 M/sec)
- Temperature Rating .....-30°F to 275°F (-35°C to 135°C)
- Minimum Pulley Diameter.....48" (1200mm)
- Blade Height.....19-3/8" (490mm)
- Usable Blade Wear Length.....11-1/2" (290mm)
- Blade Material .....Polyurethane 93 durometer (proprietary blend for abrasion resistance and long wear)
- Available for Belt Widths .....42" to 120" (1050 to 3000mm). Other sizes available upon request.
- CEMA Cleaner Rating .....Class 5

Pole Location Specs

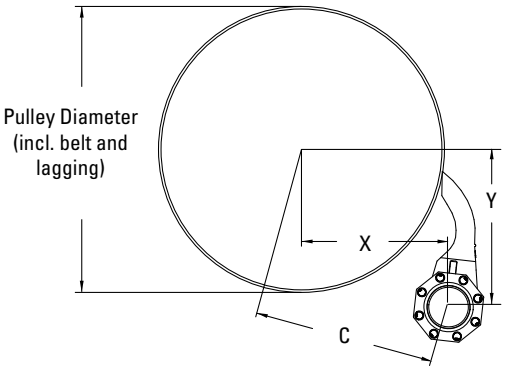

IMPERIAL

X & Y Chart for Pole Location

Pulley Diameter (including belt and lagging)	X	Y	C
48	20 1/2	26 1/4	33 1/4
49	21	26 3/8	33 5/8
50	21 1/2	26 3/8	34
51	22	26 1/2	34 3/8
52	22 1/2	26 5/8	34 3/4
53	23	26 5/8	35 1/8
54	23 1/2	26 3/4	35 5/8
55	24	26 7/8	36
56	24 1/2	26 7/8	36 3/8
57	24 7/8	27	36 3/4
58	25 3/8	27 1/8	37 1/8
59	25 7/8	27 1/8	37 1/2
60	26 3/8	27 1/4	38
61	26 7/8	27 3/8	38 3/8
62	27 3/8	27 1/2	38 3/4
63	27 7/8	27 1/2	39 1/8
64	28 3/8	27 5/8	39 5/8
65	28 7/8	27 3/4	40
66	29 3/8	27 3/4	40 3/8
67	29 7/8	27 7/8	40 7/8
68	30 3/8	28	41 1/4
69	30 7/8	28	41 3/4
70	31 3/8	28 1/8	42 1/8
71	31 7/8	28 1/4	42 1/2
72	32 3/8	28 1/4	43

X & Y Chart for Pole Location (cont.)

Pulley Diameter (including belt and lagging)	X	Y	C
73	32 3/4	28 3/8	43 3/8
74	33 1/4	28 1/2	43 7/8
75	33 3/4	28 5/8	44 1/4
76	34 1/4	28 5/8	44 3/4
77	34 3/4	28 3/4	45 1/8
78	35 1/4	28 7/8	45 1/2
79	35 3/4	28 7/8	46
80	36 1/4	29	46 3/8
81	36 3/4	29 1/8	46 7/8
82	37 1/4	29 1/8	47 1/4
83	37 3/4	29 1/4	47 3/4
84	38 1/4	29 3/8	48 1/4
85	38 3/4	29 1/2	48 5/8
86	39 1/4	29 1/2	49 1/8
87	39 3/4	29 5/8	49 1/2
88	40 1/4	29 3/4	50
89	40 3/4	29 3/4	50 3/8
90	41 1/8	29 7/8	50 7/8
91	41 5/8	30	51 3/8
92	42 1/8	30	51 3/4
93	42 5/8	30 1/8	52 1/4
94	43 1/8	30 1/4	52 5/8
95	43 5/8	30 1/4	53 1/8
96	44 1/8	30 3/8	53 5/8

METRIC

X & Y Chart for Pole Location

Pulley Diameter (including belt and lagging)	X	Y	C
1225	520	665	845
1250	535	670	855
1275	545	670	865
1300	560	675	875
1325	570	675	885
1350	585	675	895
1375	595	680	905
1400	610	680	915
1425	620	685	925
1450	635	685	935
1475	645	690	945
1500	660	690	955
1525	670	695	965
1550	685	695	975
1575	695	695	985
1600	710	700	995
1625	720	700	1005
1650	735	705	1015
1675	745	705	1025
1700	760	710	1040
1725	770	710	1050
1750	785	710	1060
1775	795	715	1070
1800	810	715	1080
1825	820	720	1090

X & Y Chart for Pole Location (cont.)

Pulley Diameter (including belt and lagging)	X	Y	C
1850	835	720	1100
1875	845	725	1115
1900	860	725	1125
1925	870	730	1135
1950	885	730	1145
1975	895	730	1155
2000	910	735	1170
2025	920	735	1180
2050	935	740	1190
2075	945	740	1200
2100	960	745	1215
2125	970	745	1225
2150	985	750	1235
2175	995	750	1245
2200	1010	750	1260
2225	1020	755	1270
2250	1035	755	1280
2275	1045	760	1290
2300	1060	760	1305
2325	1070	765	1315
2350	1085	765	1325
2375	1095	770	1340
2400	1110	770	1350
2425	1120	770	1360

Replacement Parts List

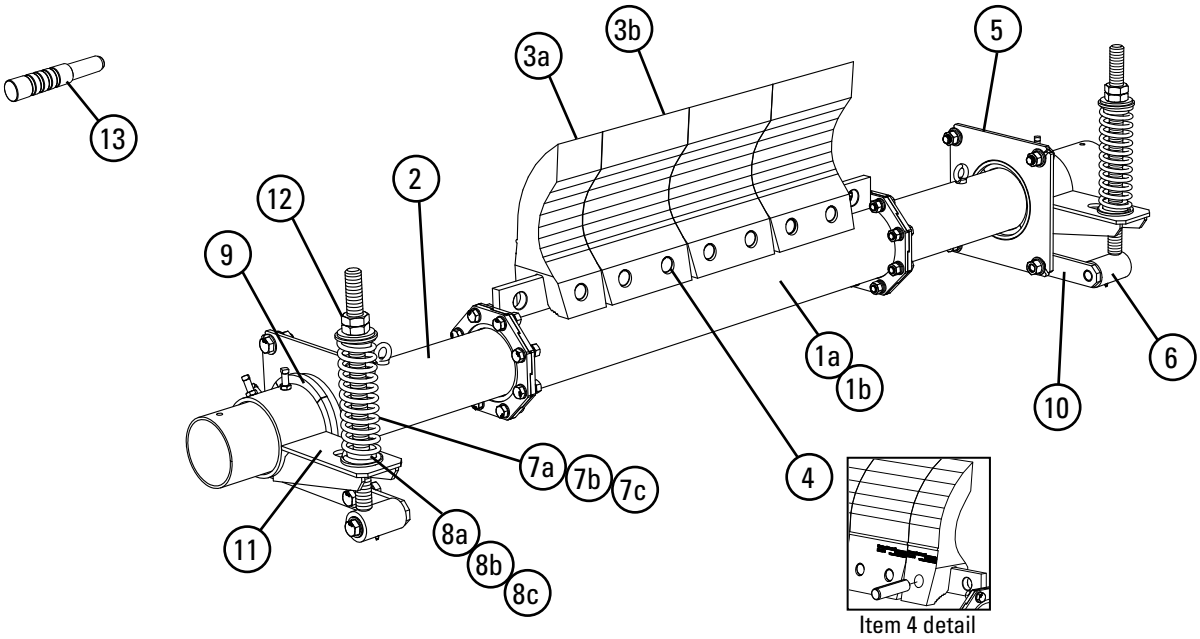

Replacement Poles

REF	DESCRIPTION	ORDERING NUMBER	ITEM CODE	WT. LBS.
1a	42" (1050mm) Center Pole BW-6	MXPP-642	90589	177.0
	48" (1200mm) Center Pole BW-6	MXPP-648	90590	198.0
	54" (1350mm) Center Pole BW-6	MXPP-654	90591	218.0
	60" (1500mm) Center Pole BW-6	MXPP-660	90592	239.0
	72" (1800mm) Center Pole BW-6	MXPP-672	90593	280.0
	84" (2100mm) Center Pole BW-6	MXPP-684	90594	320.0
	96" (2400mm) Center Pole BW-6	MXPP-696	90595	361.0
	108" (2700mm) Center Pole BW-6	MXPP-6108	90644	402.0
	120" (3000mm) Center Pole BW-6	MXPP-6120	90596	443.0
1b	42" (1050mm) Center Pole BW-12	MXPP-1242	90622	178.0
	48" (1200mm) Center Pole BW-12	MXPP-1248	90623	198.0
	54" (1350mm) Center Pole BW-12	MXPP-1254	90624	219.0
	60" (1500mm) Center Pole BW-12	MXPP-1260	90625	239.0
	72" (1800mm) Center Pole BW-12	MXPP-1272	90626	280.0
	84" (2100mm) Center Pole BW-12	MXPP-1284	90627	321.0
	96" (2400mm) Center Pole BW-12	MXPP-1296	90628	362.0
	108" (2700mm) Center Pole BW-12	MXPP-12108	90645	401.0
	120" (3000mm) Center Pole BW-12	MXPP-12120	90629	442.0
2	Extreme Duty Pole Ends* (pair)	MXPPE	90598	133.0

*Hardware Included
Lead Time: 2 weeks

Spring Tensioner Selection Chart

CLEANER BLADE WIDTH	90612 XDST-P	90611 XDST-W	90613 XDST-B
UltraShear 42" – 60" (1050 – 1500mm)	X		
UltraShear 72" – 108" (1800 – 2700mm)		X	
UltraShear 120" (3000mm)			X

Replacement Parts

REF	DESCRIPTION	ORDERING NUMBER	ITEM CODE	WT. LBS.
3a	UltraShear Blade 6" (150mm)	USB6	90410	20.0
3b	UltraShear Blade 12" (300mm)	USB12	90409	40.0
4	UltraShear Blade Pin (1 ea.)	USBP	90411	1.0
5	XDST Mounting Plate Kit* (2 ea.)	XDSTMPK	90599	64.0
6	XDST Pivot Arm Kit* (1 ea.)	XDSTPAK	90600	20.0
7a	XDST Tension Spring - Purple (1 ea.) for blades 42" - 60" (1050 - 1500mm)	XDSTS-P	90602	10.0
7b	XDST Tension Spring - White (1 ea.) for blades 72" - 108" (1800 - 2700mm)	XDSTS-W	90601	13.0
7c	XDST Tension Spring - Black (1 ea.) for blades 120" (3000mm)	XDSTS-B	90603	17.0
8a	XDST Bushing Kit - Purple (2 ea.)	XDSTBK-P	90605	0.5
8b	XDST Bushing Kit - White (2 ea.)	XDSTBK-W	90604	0.5
8c	XDST Bushing Kit - Black (2 ea.)	XDSTBK-B	90606	0.5
9	MXP Pole Bearing Kit (8 segments) Replacements for both tensioners	MXPPBK	90607	2.5
10	XDST Pivot Shaft Bracket* (1 ea.)	XDSTPSBK	90608	15.0
11	XDST Torque Arm Kit* (1 ea.)	XDSTTAK	90609	15.0
12	XDST Jam Nut Kit (2 nuts, 1 washer)	XDSTJNK	90610	1.0
13	USB Blade Pin Removal Tool	USBBRP	90412	9.0
-	XDST Spring Tensioner* - Purple (incl. 1 ea. items 5, 9; 2 ea. items 6,7a,8a,10,11,12) for blades 42" - 60" (1050 - 1500mm)	XDST-P	90612	206.0
-	XDST Spring Tensioner* - White (incl. 1 ea. items 5, 9; 2 ea. items 6,7b,8b,10,11,12) for blades 72" - 108" (1800 - 2700mm)	XDST-W	90611	212.0
-	XDST Spring Tensioner* - Black (incl. 1 ea. items 5, 9; 2 ea. items 6,7c,8c,10,11,12) for blades 120" (3000mm)	XDST-B	90613	220.0

*Hardware Included
Lead Time: 1 working day

Product Ordering Information

HV2 Precleaners with V-Tips

BELT WIDTH		V-TIP SIZE	ORDERING NUMBER	ITEM CODE	WT. LBS.
in.	mm				
18	450	SS	HV2-18SS	79323	99.5
18	450	S	HV2-18S	79324	100.9
18	450	M	HV2-18M	79325	101.7
24	600	SS	HV2-24SS	79326	112.6
24	600	S	HV2-24S	79327	114.7
24	600	M	HV2-24M	79328	115.9
30	750	SS	HV2-30SS	79329	125.6
30	750	S	HV2-30S	79330	128.4
30	750	M	HV2-30M	79331	130.0
36	900	SS	HV2-36SS	79332	138.7
36	900	S	HV2-36S	79333	142.2
36	900	M	HV2-36M	79334	144.2
36	900	L	HV2-36L	79335	145.2
42	1050	SS	HV2-42SS	79336	151.8
42	1050	S	HV2-42S	79337	156.0
42	1050	M	HV2-42M	79338	158.4
42	1050	L	HV2-42L	79339	159.6
42	1050	LL	HV2-42LL	79340	163.8
48	1200	SS	HV2-48SS	79341	164.8
48	1200	S	HV2-48S	79342	169.7
48	1200	M	HV2-48M	79343	172.5
48	1200	L	HV2-48L	79344	173.9
48	1200	LL	HV2-48LL	79345	178.8
54	1350	S	HV2-54S	79346	183.5
54	1350	M	HV2-54M	79347	186.7
54	1350	L	HV2-54L	79348	188.3
54	1350	LL	HV2-54LL	79349	193.9
60	1500	S	HV2-60S	79350	197.3
60	1500	M	HV2-60M	79351	200.9
60	1500	L	HV2-60L	79352	202.7
60	1500	LL	HV2-60LL	79353	209.0
72	1800	S	HV2-72S	79354	216.2
72	1800	M	HV2-72M	79355	220.2
72	1800	L	HV2-72L	79356	222.2
72	1800	LL	HV2-72LL	79357	229.2

*NOTE: HV2 Tips must be used only on vulcanized belts.
HV2 Suspension Arm size is determined by head pulley diameter - see chart.
Additional sizes available upon request.
Lead time: 1 working day

HV2 Precleaner
- 2-7/8" (73mm) diameter pole.

Replacement HV2-Tips

ORDERING NUMBER	ITEM CODE	WT. LBS.
HV2T-S/S	79367	0.6
HV2PT	79368	0.8

Lead time: 1 working day

Replacement HV2 Suspension Arms

SIZE	ORDERING NUMBER	ITEM CODE	WT. LBS.
SS	H2SA6SS	79369	2.5
S	H2SA6S	79370	3.2
M	H2SA6M	79371	3.6
L	H2SA6L	79372	3.8
LL	H2SA6LL	79373	4.5

Lead time: 1 working day

HV2 Suspension Arm Size

HEAD PULLEY DIAMETER + BELT & LAGGING		HV2 ARM SIZE
in.	mm	
10 - 19	250-475	SS
20 - 31	500-775	S
32 - 39	800-975	M
40 - 47	1000-1175	L
48 - 67	1200-1675	LL

Tips Required per Cleaner Size

in.	18	24	30	36	42	48	54	60	72
mm	450	600	750	900	1050	1200	1350	1500	1800
HV2-Tips Required	2	3	4	5	6	7	8	9	11

Specifications & Guidelines

Pole Length Specifications*

Cleaner Size		Pole Length		Maximum Conveyor Span	
in.	mm	in.	mm	in.	mm
18	450	66	1650	56	1400
24	600	72	1800	62	1550
30	750	78	1950	68	1700
36	900	84	2100	74	1850
42	1050	90	2250	80	2000
48	1200	96	2400	86	2150
54	1350	102	2550	92	2300
60	1500	108	2700	98	2450
72	1800	120	3000	110	2750

*For special extra long pole length requirements a Pole Extender Kit (#76024) is available that provides 30" (750mm) of extended pole length. Pole Diameter – 2-7/8" (73mm) (155)

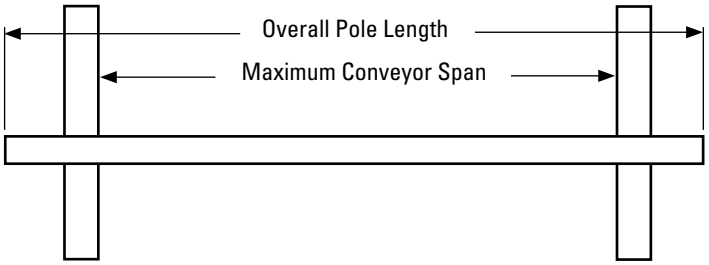

Clearance Guidelines for Installation

Suspension Arm Size	Horizontal Clearance Required		Vertical Clearance Required	
	in.	mm	in.	mm
SS	8-1/4	210	12-5/8	320
S	8-1/4	210	15-3/8	390
M	8-1/4	210	16-5/8	416
L	8-1/4	210	17-1/2	445
LL	8-1/4	210	20-1/8	511

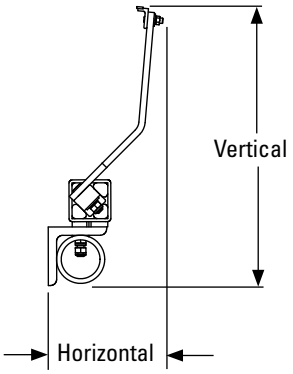

HV2 Spring Length Chart
(for optimal blade tensioning)

Belt Width		Tips	Spring Length									
			SS		S		M		L		LL	
in	mm		in	mm	in	mm	in	mm	in	mm	in	mm
18"	450	2	5 1/4"	133	4 7/8"	124	4 3/4"	121	4 1/2"	114	N/A	N/A
24"	600	3	4 1/2"	114	4 1/8"	105	5 3/4"	146	5 3/4"	146	N/A	N/A
30"	750	4	4 1/2"	114	4 1/8"	105	5 3/4"	146	5 3/4"	146	N/A	N/A
36"	900	5	5 3/4"	146	5 5/8"	143	5 1/2"	140	5 3/8"	137	N/A	N/A
42"	1050	6	5 5/8"	143	5 3/8"	137	5 1/4"	133	5 1/8"	130	4 3/4"	121
48"	1200	7	5 5/8"	143	5 3/8"	137	5 1/4"	133	5 1/8"	130	4 3/4"	121
54"	1350	8	N/A	N/A	5 1/8"	130	5	127	4 7/8"	124	6"	152
60"	1500	9	N/A	N/A	4 7/8"	124	6 1/8"	156	6"	152	5 7/8"	150
72"	1800	11	N/A	N/A	6"	152	6"	152	5 7/8"	150	5 3/4"	146

Purple Spring Silver Spring White Spring

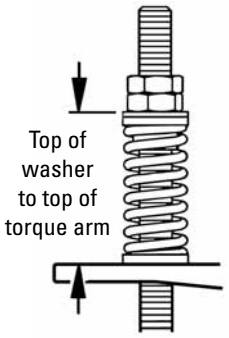

Specifications:

- Maximum Belt Speed .....1500 FPM (7.5M/sec)
- Temperature Rating .....-30°F to 180°F (-35°C to 82°C)
- Usable Blade Wear Length.....3/8" (9mm)
- Blade Material .....Long Life Tungsten Carbide (for vulcanized belts only)
- Available for Belt Widths .....18" to 72" (450mm to 1800mm) Other sizes available upon request
- CEMA Cleaner Rating .....Class 4

Replacement Parts List

HV2
Segmented Blade Precleaner

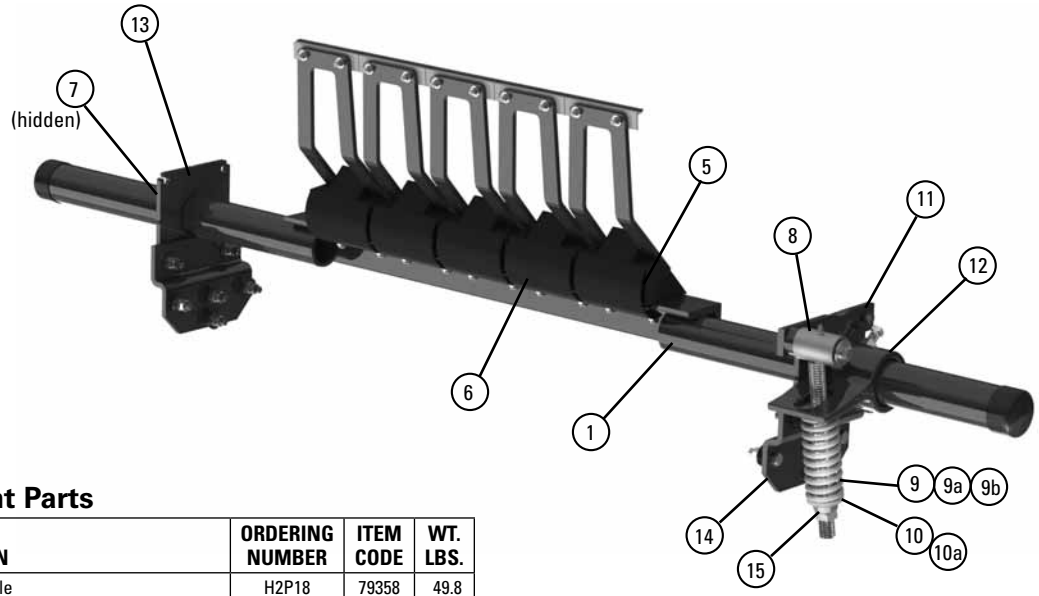

Replacement Parts

REF	DESCRIPTION	ORDERING NUMBER	ITEM CODE	WT. LBS.
1	18" (450mm) Pole	H2P18	79358	49.8
	24" (600mm) Pole	H2P24	79359	55.0
	30" (750mm) Pole	H2P30	79360	60.1
	36" (900mm) Pole	H2P36	79361	65.3
	42" (1050mm) Pole	H2P42	79362	70.5
	48" (1200mm) Pole	H2P48	79363	75.6
	54" (1350mm) Pole	H2P54	79364	80.8
	60" (1500mm) Pole	H2P60	79365	86.0
	72" (1800mm) Pole	H2P72	79366	96.3
2	HV2 Tip (6"/150mm Tip, 1 ea.)	HV2T-S/S	79367	0.6
2a	HV2 Protected V-Tip* (6"/150mm Tip, 1 ea.) (for vulcanized belts only) (for abusive wear)	HV2PT	79368	0.8
3	HV2-S/S Tip Shield (optional)	HV2SSTS	79375	0.5
4	HV2 SS Suspension Arm*	H2SA6SS	79369	2.5
	HV2 S Suspension Arm*	H2SA6S	79370	3.2
	HV2 M Suspension Arm*	H2SA6M	79371	3.6
	HV2 L Suspension Arm*	H2SA6L	79372	3.8
	HV2 LL Suspension Arm*	H2SA6LL	79373	4.5
5	HV2 Cushion	H2RC	79374	4.3
6	HV2 Polyurethane Cushion Cover	UHVC	79453	0.5
7	Pole Lock Collar* (1 ea.)	MSPPL	75816	1.9
8	Pivot Arm Kit* (1 ea.)	QMTPAK	76096	4.3
9a	Tension Spring - Purple (1 ea.)**	QMTS-P	75845	0.6
9b	Tension Spring - White (1 ea.)**	PSTS-W	75898	1.7
9c	Tension Spring - Silver (1 ea.)**	PSTS-S	75899	3.0
10a	Bushing Kit - Purple (2 ea.) (for Item 9a)	QMTBK-P	76097	0.1
10b	Bushing Kit - White (2 ea.) (for Items 9b & 9c)	QMTBK-W	76098	0.2
11	Pivot Shaft Bracket Kit* (1 ea.)	QMTPSBK	76099	4.3
12	Torque Arm Kit* (1 ea.)	PSTA	75896	11.4
13	Mounting Plate Kit* (2 ea.)	MSPMPK	75811	8.3
14	Offset Bracket Kit* (1 ea.)	HOBK	76399	12.4
15	Jam Nut Kit QMT Tensioner	JNK-C	79893	0.3
-	QMT Spring Tensioner* - Purple (incl. 1 ea. Items 9a, 10a, 11, 12, 13)	QMT-P	76074	20.4
-	QMT Spring Tensioner* - White (incl. 1 ea. Items 9b, 10b, 11, 12, 13)	QMT-W	76075	21.8
-	QMT Spring Tensioner* - Silver (incl. 1 ea. Items 9c, 10b, 11, 12, 13)	QMT-S	79039	20.3

*Hardware included
Note: All poles and tensioners are heavy-duty style.
Lead time: 1 working day

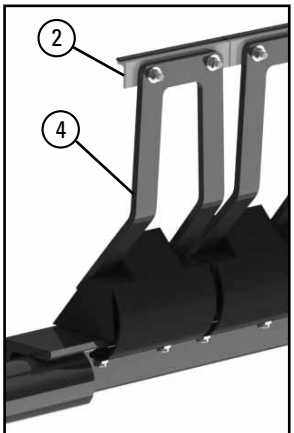

HV2 Tips and Arms

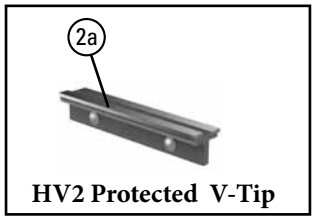

HV2 Protected V-Tip

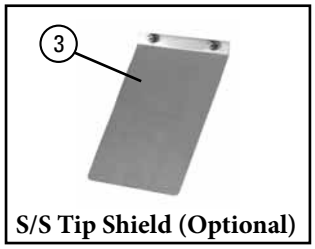

S/S Tip Shield (Optional)

Spring Tensioner Selection Chart

HV2 Precleaner Size	76074 QMT-P	76075 QMT-W	76402 QMT-S
18" SS,S,M; 24" S,S; 30" SS,S	X		
24" M; 30" M; 36" SS-L; 42" SS-L; 48" SS-LL; 54" S-L; 60" S; 72" S		X	
54" LL; 60" M-LL; 72" M-LL			X

Tips Required per Cleaner Size

in.	18	24	30	36	42	48	54	60	72
mm	450	600	750	900	1050	1200	1350	1500	1800
HV2-Tips Required	2	3	4	5	6	7	8	9	11

Product Ordering Information

H-Type® with XF2-Tips

BELT WIDTH		XF2-TIP SIZE	ORDERING NUMBER	ITEM CODE	WT. LBS.
in.	mm				
18	450	SS	HXF2-18SS	76138	32.0
18	450	S	HXF2-18S	76289	97.1
18	450	M	HXF2-18M	76290	97.9
24	600	SS	HXF2-24SS	76139	110.0
24	600	S	HXF2-24S	76291	111.2
24	600	M	HXF2-24M	76292	112.4
30	750	SS	HXF2-30SS	76140	113.8
30	750	S	HXF2-30S	76293	115.0
30	750	M	HXF2-30M	76294	116.2
36	900	SS	HXF2-36SS	76141	126.2
36	900	S	HXF2-36S	76295	127.8
36	900	M	HXF2-36M	76296	129.4
36	900	L	HXF2-36L	76297	130.6
42	1050	SS	HXF2-42SS	76142	138.6
42	1050	S	HXF2-42S	76298	140.6
42	1050	M	HXF2-42M	76299	142.6
42	1050	L	HXF2-42L	76300	144.1
48	1200	SS	HXF2-48SS	76143	142.4
48	1200	S	HXF2-48S	76301	144.4
48	1200	M	HXF2-48M	76302	146.4
48	1200	L	HXF2-48L	76303	147.9
54	1350	SS	HXF2-54SS	76144	154.8
54	1350	S	HXF2-54S	76304	157.2
54	1350	M	HXF2-54M	76305	161.7
54	1350	L	HXF2-54L	76306	163.5
60	1500	S	HXF2-60S	76145	196.2
60	1500	M	HXF2-60M	76307	199.0
60	1500	L	HXF2-60L	76308	201.1
72	1800	S	HXF2-72S	76146	216.8
72	1800	M	HXF2-72M	76309	220.0
72	1800	L	HXF2-72L	76310	222.4

*NOTE: XF2-Tips must be used on mechanically spliced belts. Can be used on vulcanized belts.
XF2-Tip size is determined by head pulley diameter - see chart.
Additional sizes available upon request.
To order a cleaner with XF-Tips, call Customer Service.
Lead time: 1 working day

H-Type Precleaner with XF2-Tips
- 2 7/8" (73mm) diameter pole.

Replacement XF2-Tips

SIZE	ORDERING NUMBER	ITEM CODE	WT. LBS.
SS	HXF2-SS	75979	3.0
S	HXF2-S	75980	3.4
M	HXF2-M	75981	3.8
L	HXF2-L	75982	4.1

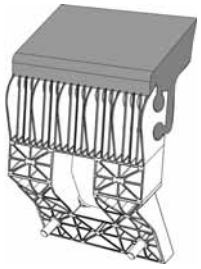

Specially formulated, long-wearing polyurethane blade tip.
Impact-resistant, reinforced nylon base for rigidity and minimal deflection.
Lead time: 1 working day

Replacement XF-Tips

SIZE	ORDERING NUMBER	ITEM CODE	WT. LBS.
SS	HXF8SS	74307	3.4
S	HXF8S	74689	3.8
M	HXF8M	74690	4.1
L	HXF8L	74691	4.5

Lead time: 1 working day

Tips Required per Cleaner Size

in.	18	24	30	36	42	48	54	60	72
mm	450	600	750	900	1050	1200	1350	1500	1800
XF2-Tips Required	2	3	3	4	5	5	6	7	8

XF2-Tip & XF-Tip Size

HEAD PULLEY DIAMETER + BELT & LAGGING		XF2-TIP & XF-TIP SIZE
in.	mm	
10 - 19	250-475	SS
20 - 31	500-775	S
32 - 39	800-975	M
40 - 47	1000-1175	L

Pole Length Specifications*

CLEANER SIZE		POLE LENGTH		MAXIMUM CONVEYOR SPAN	
in.	mm	in.	mm	in.	mm
18	450	66	1650	56	1400
24	600	72	1800	62	1550
30	750	78	1950	68	1700
36	900	84	2100	74	1850
42	1050	90	2250	80	2000
48	1200	96	2400	86	2150
54	1350	102	2550	92	2300
60	1500	108	2700	98	2450
72	1800	120	3000	110	2750

*For special extra long pole length requirements a Pole Extender Kit (#76024) is available that provides 30" (750mm) of extended pole length. (155).
Pole Diameter – 2-7/8" (73mm)

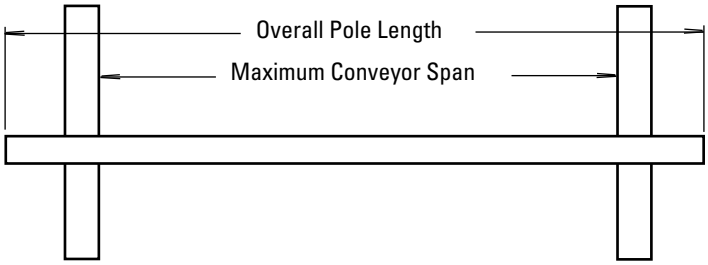

Clearance Guidelines for Installation

SUSPENSION ARM SIZE	HORIZONTAL CLEARANCE REQUIRED		VERTICAL CLEARANCE REQUIRED	
	in.	mm	in.	mm
SS	7	175	13	325
S	7	175	15	375
M	7	175	16 1/2	413
L	7	175	18 1/2	463
LL	7	175	22	550

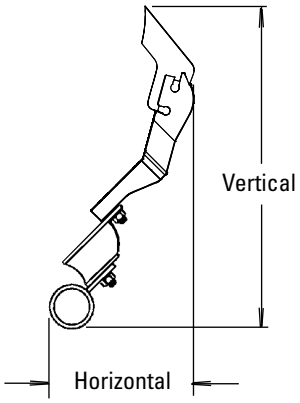

Spring Length Chart
with QMT Spring Tensioner

BELT WIDTH	TIPS	SPRING LENGTH			
		SS	S	M	L
18"	2	4 1/2"	4"	5 3/4"	N/A
24"	3	5 5/8"	5 1/2"	5 3/8"	N/A
30"	3	5 5/8"	5 1/2"	5 3/8"	N/A
36"	4	5 3/8"	5 1/8"	5"	4 1/4"
42"	5	5"	4 3/4"	6"	6"
48"	5	5"	4 3/4"	6"	6"
54"	6	4 3/4"	6"	5 7/8"	5 7/8"
60"	7	N/A	5 7/8"	5 3/4"	5 3/4"
72"	8	N/A	5 3/4"	5 5/8"	5 5/8"

Purple Spring White Spring Silver Spring

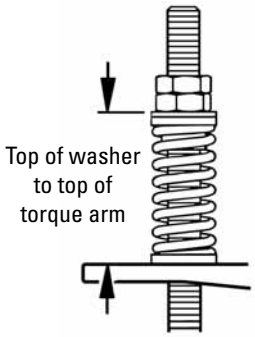

Specifications:

- Maximum Belt Speed ..... 1000 FPM (5M/sec)
- Temperature Rating ..... -30°F to 180°F (-35°C to 82°C)
- Usable Blade Wear Length ..... 3" (75mm)
- Blade Material ..... Polyurethane (proprietary blend for abrasion resistance and long wear)
- Available for Belt Widths ..... 18" to 72" (450mm to 1800mm). Other sizes available upon request
- CEMA Cleaner Rating ..... Class 4

Product Ordering Information

H-Type® with V-Tips*

BELT WIDTH in.	BELT WIDTH mm	SUSPENSION ARM SIZE	ORDERING NUMBER	ITEM CODE	WT. LBS.
18	450	SS	HV-18SS	76101	96.3
18	450	S	HV-18S	76190	97.1
18	450	M	HV-18M	76191	98.1
24	600	SS	HV-24SS	76102	108.6
24	600	S	HV-24S	76192	109.8
24	600	M	HV-24M	76193	111.3
30	750	SS	HV-30SS	76103	112.4
30	750	S	HV-30S	76194	113.6
30	750	M	HV-30M	76195	115.1
36	900	SS	HV-36SS	76104	124.8
36	900	S	HV-36S	76196	127.8
36	900	M	HV-36M	76197	129.8
36	900	L	HV-36L	76198	131.4
42	1050	SS	HV-42SS	76105	138.6
42	1050	S	HV-42S	76199	140.6
42	1050	M	HV-42M	76251	143.1
42	1050	L	HV-42L	76252	145.1
42	1050	LL	HV-42LL	76253	147.6
48	1200	SS	HV-48SS	76106	142.4
48	1200	S	HV-48S	76254	144.4
48	1200	M	HV-48M	76255	146.9
48	1200	L	HV-48L	76256	148.9
48	1200	LL	HV-48LL	76257	151.4
54	1350	S	HV-54S	76107	157.2
54	1350	M	HV-54M	76258	160.2
54	1350	L	HV-54L	76259	162.6
54	1350	LL	HV-54LL	76260	165.6
60	1500	S	HV-60S	76108	194.1
60	1500	M	HV-60M	76261	197.6
60	1500	L	HV-60L	76262	200.4
60	1500	LL	HV-60LL	76263	206.0
72	1800	S	HV-72S	76109	214.7
72	1800	M	HV-72M	76264	218.7
72	1800	L	HV-72L	76265	224.0
72	1800	LL	HV-72LL	76266	228.0

*NOTE: V-Tips can be used ONLY on vulcanized belts.
Suspension arm size is determined by head pulley diameter - see chart.
Additional sizes available upon request.
Lead time: 1 working day

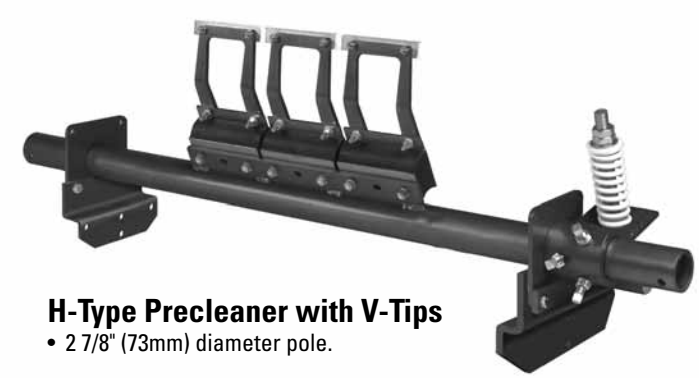

H-Type Precleaner with V-Tips
- 2 7/8" (73mm) diameter pole.

Replacement V-Tips

ORDERING NUMBER	ITEM CODE	WT. LBS.
HVT8-S/S	75419	1.0

Lead time: 1 working day

Replacement Suspension Arms

SIZE	ORDERING NUMBER	ITEM CODE	WT. LBS.
SS	HSA8SS	73047	2.0
S	HSA8S	73048	2.4
M	HSA8M	73049	2.9
L	HSA8L	73063	3.3
LL	HSA8LL	73064	3.8

Lead time: 1 working day

Suspension Arm Size

HEAD PULLEY DIAMETER + BELT & LAGGING in.	HEAD PULLEY DIAMETER + BELT & LAGGING mm	SUSPENSION ARM SIZE
10 - 19	250-475	SS
20 - 31	500-775	S
32 - 39	800-975	M
40 - 47	1000-1175	L
48 - 67	1200-1675	LL

Tips Required per Cleaner Size

in.	18	24	30	36	42	48	54	60	72
mm	450	600	750	900	1050	1200	1350	1500	1800
V-Tips Required	2	3	3	4	5	5	6	7	8

Pole Length Specifications*

CLEANER SIZE		POLE LENGTH		MAXIMUM CONVEYOR SPAN	
in.	mm	in.	mm	in.	mm
18	450	66	1650	56	1400
24	600	72	1800	62	1550
30	750	78	1950	68	1700
36	900	84	2100	74	1850
42	1050	90	2250	80	2000
48	1200	96	2400	86	2150
54	1350	102	2550	92	2300
60	1500	108	2700	98	2450
72	1800	120	3000	110	2750

*For special extra long pole length requirements a Pole Extender Kit (#76024) is available that provides 30" (750mm) of extended pole length. (155).
Pole Diameter – 2-7/8" (73mm)

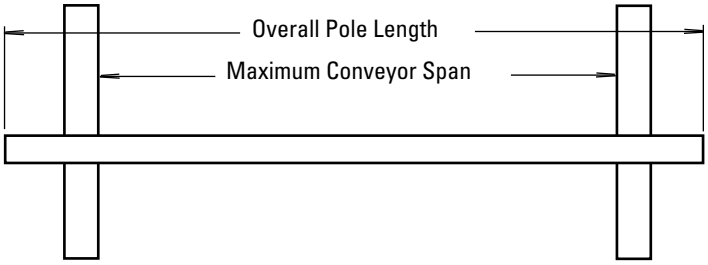

Clearance Guidelines for Installation

SUSPENSION ARM SIZE	HORIZONTAL CLEARANCE REQUIRED		VERTICAL CLEARANCE REQUIRED	
	in.	mm	in.	mm
SS	7	175	13	325
S	7	175	15	375
M	7	175	16 1/2	413
L	7	175	18 1/2	463
LL	7	175	22	550

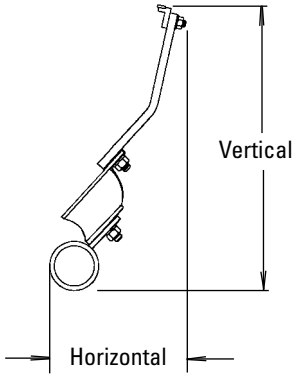

Spring Length Chart

with QMT Spring Tensioner

BELT WIDTH	TIPS	SPRING LENGTH				
		SS	S	M	L	LL
18"	2	5 1/4"	4 7/8"	4 3/4"	4 1/2"	N/A
24"	3	4 1/2"	4 1/8"	5 3/4"	5 3/4"	N/A
30"	3	4 1/2"	4 1/8"	5 3/4"	5 3/4"	N/A
36"	4	5 3/4"	5 5/8"	5 1/2"	5 3/8"	N/A
42"	5	5 5/8"	5 3/8"	5 1/4"	5 1/8"	4 3/4"
48"	5	5 5/8"	5 3/8"	5 1/4"	5 1/8"	4 3/4"
54"	6	N/A	5 1/8"	5	4 7/8"	6"
60"	7	N/A	4 7/8"	6 1/8"	6"	5 7/8"
72"	8	N/A	6"	6"	5 7/8"	5 3/4"

Purple Spring White Spring Silver Spring

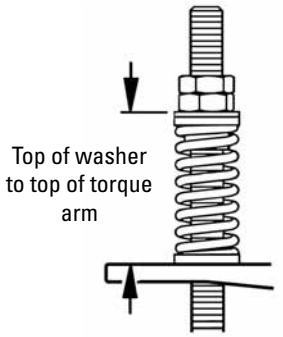

Specifications:

- Maximum Belt Speed ..... 1500 FPM (7.5M/sec)
- Temperature Rating ..... -30°F to 180°F (-35°C to 82°C)
- Usable Blade Wear Length ..... 3/8" (9mm)
- Blade Material ..... Long Life Tungsten Carbide (for vulcanized belts only)
- Available for Belt Widths ..... 18" to 72" (450mm to 1800mm) Other sizes available upon request
- CEMA Cleaner Rating ..... Class 4

Product Ordering Information

H-Type® with Protected V-Tips*

For abusive applications where materials being cleaned off the belt wear the back sides of the cleaner's V-Tips.

BELT WIDTH		SUSPENSION ARM SIZE	ORDERING NUMBER	ITEM CODE	WT. LBS.
in.	mm				
18	450	S	HVP-18S	76124	99.1
18	450	M	HVP-18M	76267	100.1
18	450	L	HVP-18L	76268	100.9
24	600	S	HVP-24S	76125	112.8
24	600	M	HVP-24M	76269	114.3
24	600	L	HVP-24L	76270	115.5
30	750	S	HVP-30S	76126	116.6
30	750	M	HVP-30M	76271	118.1
30	750	L	HVP-30L	76272	119.3
36	900	S	HVP-36S	76127	130.4
36	900	M	HVP-36M	76273	133.8
36	900	L	HVP-36L	76274	135.4
42	1050	S	HVP-42S	76128	145.6
42	1050	M	HVP-42M	76275	148.1
42	1050	L	HVP-42L	76276	150.1
48	1200	S	HVP-48S	76129	149.4
48	1200	M	HVP-48M	76277	151.9
48	1200	L	HVP-48L	76278	153.9
48	1200	LL	HVP-48LL	76279	156.4
54	1350	S	HVP-54S	76130	163.2
54	1350	M	HVP-54M	76280	166.2
54	1350	L	HVP-54L	76281	168.6
54	1350	LL	HVP-54LL	76282	171.6
60	1500	S	HVP-60S	76131	201.1
60	1500	M	HVP-60M	76283	204.6
60	1500	L	HVP-60L	76284	207.4
60	1500	LL	HVP-60LL	76285	213.0
72	1800	S	HVP-72S	76132	222.7
72	1800	M	HVP-72M	76286	226.7
72	1800	L	HVP-72L	76287	232.0
72	1800	LL	HVP-72LL	76288	236.0

*NOTE: Protected V-Tips can be used ONLY on vulcanized belts.
Suspension arm size is determined by head pulley diameter - see chart.
Cleaners come standard with Stainless Steel Tip Shields.
Additional sizes available upon request.
Lead time: 1 working day

H-Type Precleaner with HVP-Tips
- 2 7/8" (73mm) diameter pole.

Replacement Protected V-Tips

ORDERING NUMBER	ITEM CODE	WT. LBS.
HVPT	73631	2.7

Lead time: 1 working day

Replacement Suspension Arms

SIZE	ORDERING NUMBER	ITEM CODE	WT. LBS.
SS	HSA8SS	73047	2.0
S	HSA8S	73048	2.4
M	HSA8M	73049	2.9
L	HSA8L	73063	3.3
LL	HSA8LL	73064	3.8

Lead time: 1 working day

Tips Required per Cleaner Size

in.	18	24	30	36	42	48	54	60	72
mm	450	600	750	900	1050	1200	1350	1500	1800
Protected V-Tips Required	2	3	3	4	5	5	6	7	8

Suspension Arm Size

HEAD PULLEY DIAMETER + BELT & LAGGING		SUSPENSION ARM SIZE
in.	mm	
10 - 19	250-475	SS
20 - 31	500-775	S
32 - 39	800-975	M
40 - 47	1000-1175	L
48 - 67	1200-1675	LL

Specifications & Guidelines

H-Type with Protected V-Tips
Segmented Blade Precleaner

Pole Length Specifications*

CLEANER SIZE		POLE LENGTH		MAXIMUM CONVEYOR SPAN	
in.	mm	in.	mm	in.	mm
18	450	66	1650	56	1400
24	600	72	1800	62	1550
30	750	78	1950	68	1700
36	900	84	2100	74	1850
42	1050	90	2250	80	2000
48	1200	96	2400	86	2150
54	1350	102	2550	92	2300
60	1500	108	2700	98	2450
72	1800	120	3000	110	2750

*For special extra long pole length requirements a Pole Extender Kit (#76024) is available that provides 30" (750mm) of extended pole length. (155).
Pole Diameter – 2-7/8" (73mm)

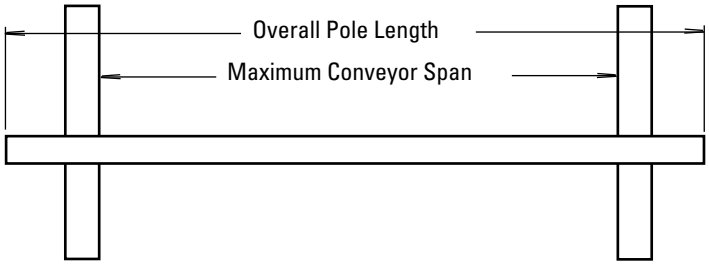

Clearance Guidelines For Installation

SUSPENSION ARM SIZE	HORIZONTAL CLEARANCE REQUIRED		VERTICAL CLEARANCE REQUIRED	
	in.	mm	in.	mm
SS	7	175	13	325
S	7	175	15	375
M	7	175	16 1/2	413
L	7	175	18 1/2	463
LL	7	175	22	550

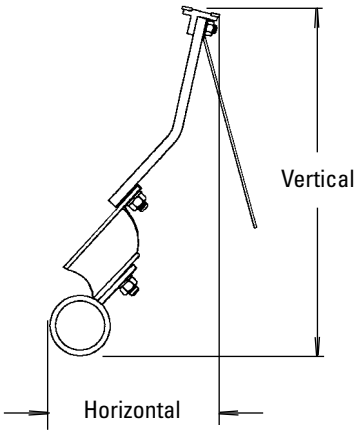

Spring Length Chart
with QMT Spring Tensioner

BELT WIDTH	TIPS	SPRING LENGTH				
		SS	S	M	L	LL
18"	2	5 1/4"	4 7/8"	4 3/4"	4 1/2"	N/A
24"	3	4 1/2"	4 1/8"	5 3/4"	5 3/4"	N/A
30"	3	4 1/2"	4 1/8"	5 3/4"	5 3/4"	N/A
36"	4	5 3/4"	5 5/8"	5 1/2"	5 3/8"	N/A
42"	5	5 5/8"	5 3/8"	5 1/4"	5 1/8"	4 3/4"
48"	5	5 5/8"	5 3/8"	5 1/4"	5 1/8"	4 3/4"
54"	6	N/A	5 1/8"	5	4 7/8"	6"
60"	7	N/A	4 7/8"	6 1/8"	6"	5 7/8"
72"	8	N/A	6"	6"	5 7/8"	5 3/4"

Purple Spring White Spring Silver Spring

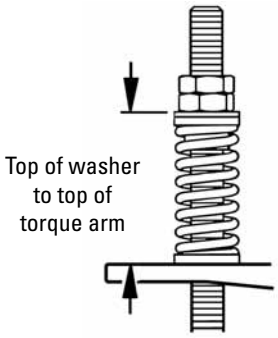

Specifications:

- Maximum Belt Speed .....1500 FPM (7.5M/sec)
- Temperature Rating .....-30°F to 180°F (-35°C to 82°C)
- Usable Blade Wear Length.....3/8" (9mm)
- Blade Material .....Long Life Tungsten Carbide (for vulcanized belts only)
- Available for Belt Widths .....18" to 72" (450mm to 1800mm). Other sizes available upon request
- CEMA Cleaner Rating .....Class 4

Replacement Parts List

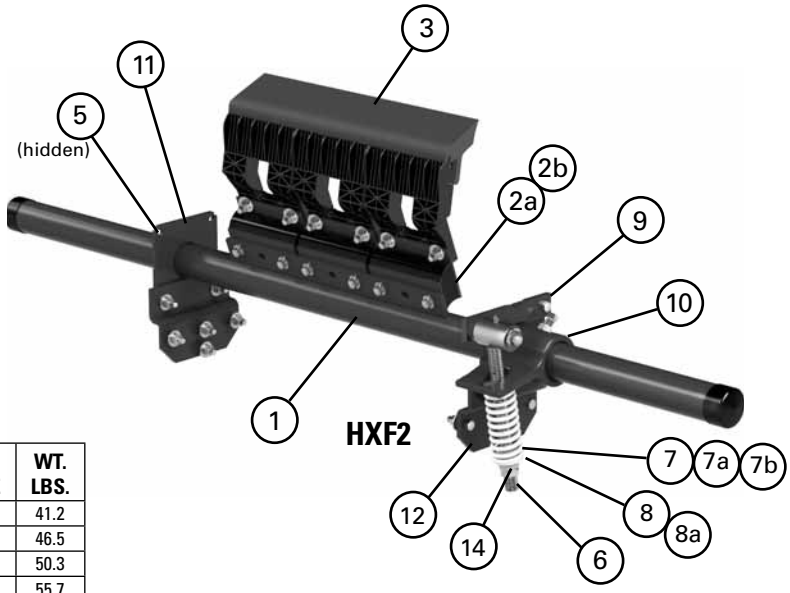

Replacement Parts

REF	DESCRIPTION	ORDERING NUMBER	ITEM CODE	WT. LBS.
1	18" (450mm) Pole	H78P18	76110	41.2
	24" (600mm) Pole	H78P24	76111	46.5
	30" (750mm) Pole	H78P30	76112	50.3
	36" (900mm) Pole	H78P36	76113	55.7
	42" (1050mm) Pole	H78P42	76114	61.1
	48" (1200mm) Pole	H78P48	76115	64.9
	54" (1350mm) Pole	H78P54	76116	70.3
	60" (1500mm) Pole	H78P60	76117	99.8
	72" (1800mm) Pole	H78P72	76118	113.0
2a	H2 XF-Tip Cushion* (for S, M, L HXF2-Tips; or S - LL Susp. Arms)	HXFC2	75902	4.0
2b	H2 F-Tip Cushion* (for SS HXF2 Tips; or SS Susp. Arms)	HFC2	75901	4.0
3	HXF2-Tip Extra Small*	HXF2-SS	75979	3.0
	HXF2-Tip Small*	HXF2-S	75980	3.4
	HXF2-Tip Medium*	HXF2-M	75981	3.8
	HXF2-Tip Large*	HXF2-L	75982	4.1
3a	H V-Tip* (1 ea.)	HVT8-S/S	75419	1.0
3b	H Protected V-Tip* (1 ea.) for vulcanized belts only) (for abusive wear)	HVPT	73631	2.7
4	H SS Suspension Arm*	HSA8SS	73047	0.5
	H S Suspension Arm*	HSA8S	73048	1.0
	H M Suspension Arm*	HSA8M	73049	1.5
	H L Suspension Arm*	HSA8L	73063	2.0
	H LL Suspension Arm*	HSA8LL	73064	2.5
5	Pole Lock Collar* (1 ea.)	MSPPL	75816	1.9
6	Pivot Arm Kit* (1 ea.)	QMTPAK	76096	4.3
7	Tension Spring - Purple (1 ea.)**	QMTS-P	75845	0.6
7a	Tension Spring - White (1 ea.)**	PSTS-W	75898	1.7
7b	Tension Spring - Silver (1 ea.)**	PSTS-S	75899	3.0
8	Bushing Kit - Purple (2 ea.) (for Item 7)	QMTBK-P	76097	0.1
8a	Bushing Kit - White (2 ea.) (for Items 7a & 7b)	QMTBK-W	76098	0.2
9	Pivot Shaft Bracket Kit* (1 ea.)	QMTPSBK	76099	4.3
10	Torque Arm Kit* (1 ea.)	PSTA	75896	11.4
11	Mounting Plate Kit* (2 ea.)	MSPMPK	75811	8.3
12	Offset Bracket Kit* (1 ea.)	HOBK	76399	12.4
13	H SS Tip Shield	HSSTS	74771	0.5
14	Jam Nut Kit QMT Tensioner	JNK-C	79893	0.3
-	H SS Cushion Shield	HSSCS	74772	0.6
-	QMT Spring Tensioner* - Purple (incl. 1 ea. Items 6, 7, 8, 9, & 10)	QMT-P	76074	20.4
-	QMT Spring Tensioner* - White (incl. 1 ea. Items 6, 7a, 8a, 9, & 10)	QMT-W	76075	21.8
-	QMT Spring Tensioner* - Silver (incl. 1 ea. Items 6, 7b, 8a, 9, & 10)	QMT-S	79039	20.3

*Hardware included
Note: All poles and tensioners are heavy-duty style.
Parts for old style H cleaners - See 165
Lead time: 1 working day

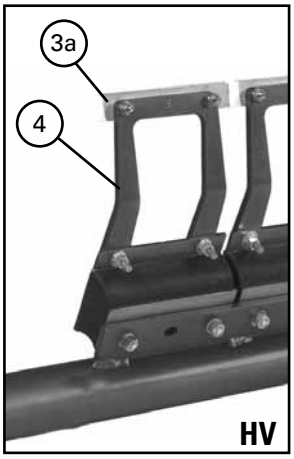

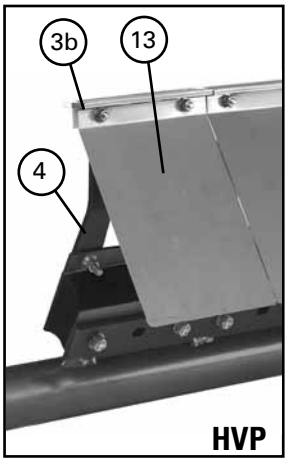

Spring Tensioner Selection Chart

CLEANER TYPE AND SIZE	76074 QMT-P	76075 QMT-W	79039 QMT-S
HXF2			
18" SS & S	X		
18" M; 24"-36"; 42"-48" SS & S; 54" SS		X	
42"-48" M & L; 54"-72" S, M, L			X
HV			
18" SS, S, M; 24"-30" SS &S	X		
24"-30" M; 36"-48", 54" S, M, L; 60" S		X	
54" LL; 60" M, L, LL; 72"			X
HVP			
18" S, M; 24"-30" S	X		
24"-30" M; 36"-48"; 54" S, M, L; 60" S		X	
54" LL; 60" M, L, LL; 72"			X

Product Ordering Information

H-Type with V-Tips
High Temperature Precleaner

High Temp Precleaner with V-Tips

BELT WIDTH		SUSPENSION ARM SIZE	ORDERING NUMBER	ITEM CODE	WT. LBS.
in.	mm				
18	450	SS	HTV18SS	74821	64.0
18	450	S	HTV18S	74828	65.0
24	600	SS	HTV24SS	74822	71.6
24	600	S	HTV24S	74829	72.6
30	750	SS	HTV30SS	74823	78.0
30	750	S	HTV30S	74830	80.0
36	900	SS	HTV36SS	74824	88.0
36	900	S	HTV36S	74831	90.0
36	900	M	HTV36M	74838	92.0
42	1050	SS	HTV42SS	74825	108.0
42	1050	S	HTV42S	74832	110.0
42	1050	M	HTV42M	74839	112.0
48	1200	SS	HTV48SS	74826	117.0
48	1200	S	HTV48S	74833	120.0
48	1200	M	HTV48M	74840	122.0

Suspension arm size is determined by head pulley diameter - see chart.
Pole Diameter - 2-3/8" (60mm)
Lead time: 1 working day

Replacement Suspension Arms

SUSPENSION ARM SIZE	ORDERING NUMBER	ITEM CODE	WT. LBS.
SS	HSA8SS	73047	0.5
S	HSA8S	73048	1.0
M	HSA8M	73049	1.5

Lead time: 1 working day

Replacement V-Tips

ORDERING NUMBER	ITEM CODE	WT. LBS.
HVT8-S/S	75419	1.0

Lead time: 1 working day

Replacement Spring

ORDERING NUMBER	ITEM CODE	WT. LBS.
HTTS-HT	79068	1.0

Lead time: 1 working day

Tips Required per Cleaner Size

in.	18	24	30	36	42	48
mm	450	600	750	900	1050	1200
V-Tips Required	2	3	3	4	5	5

Suspension Arm Size

HEAD PULLEY DIAMETER + BELT & LAGGING		SUSPENSION ARM SIZE
in.	mm	
8 - 15	200 - 375	SS
16 - 27	400 - 675	S
28 - 35	700 - 875	M

Product Notes:

- The High Temp Precleaner works in ambient temperatures up to 400°F (204°C) with spikes to 450°F (232°C)
- V-Tips can be used ONLY on vulcanized belts.
- Cleaners come standard with stainless steel tip shields.
- For replacement parts see the old-style H-Type Replacement Parts List (165).
- Compatible with reversing belts.

Product Ordering Information

EZS2 Secondary

BELT WIDTH		ORDERING NUMBER	ITEM CODE	WT. LBS.
in.	mm			
18	450	EZS2-18	75643	71.0
24	600	EZS2-24	75644	75.8
30	750	EZS2-30	75645	79.7
36	900	EZS2-36	75646	85.5
42	1050	EZS2-42	75647	89.4
48	1200	EZS2-48	75648	94.2
54	1350	EZS2-54	75649	99.0
60	1500	EZS2-60	75650	136.3
72	1800	EZS2-72	75651	151.9

Lead time: 1 working day

Replacement C-Tips

ORDERING NUMBER	ITEM CODE	WT. LBS.
ICT6	74535	0.7

Lead time: 1 working day

Tips Required Per Cleaner Size

in.	18	24	30	36	42	48	54	60	72
mm	450	600	750	900	1050	1200	1350	1500	1800
C-Tips Required	3	4	5	6	7	8	9	10	12

Product Notes:

- Blade width equals belt width.
- Can be installed in any location from where the belt leaves the pulley on down the beltline.
- FormFlex™ cushions automatically adjust the individual tension of each blade to the belt.
- Works with mechanical splices.
- A special cushion pad helps absorb the impact from mechanical splices and eliminates blade vibration.
- Comes complete with universal mounting brackets.
- Versatile tensioner can be installed to either push-up or pull-up the cleaner to the belt, depending on installation space constraints.
- If belt is cupped or has low tension, a hold-down roller may be required to flatten and support the belt for optimal cleaning results.

Product Ordering Information

High Temp Secondary Cleaner with C-Tips

BELT WIDTH		ORDERING NUMBER	ITEM CODE	WT. LBS.
in.	mm			
18	450	HTS18	76085	64.0
24	600	HTS24	76086	68.0
30	750	HTS30	76087	72.0
36	900	HTS36	76088	76.0
42	1050	HTS42	76089	80.0
48	1200	HTS48	76090	84.0
54	1350	HTS54	76091	88.0
60	1500	HTS60	76092	145.3
72	1800	HTS72	76093	149.5

Pole Diameter - 2-3/8" (60mm)
Lead time: 1 working day

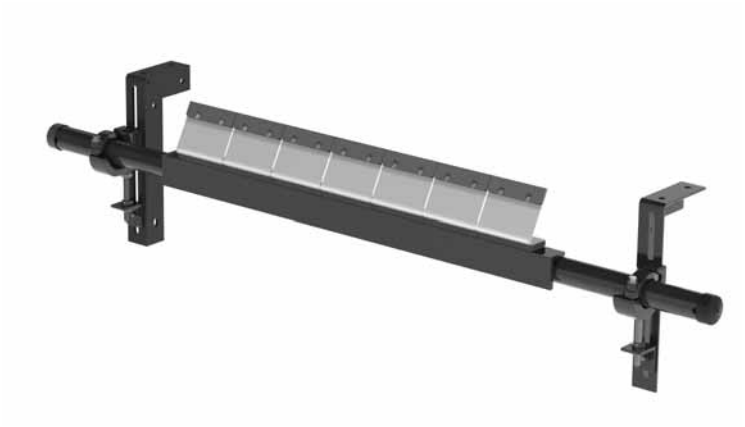

Replacement C-Tips

ORDERING NUMBER	ITEM CODE	WT. LBS.
ICT6	74535	0.7

Lead time: 1 working day

Replacement Cushion Kit

ORDERING NUMBER	ITEM CODE	WT. LBS.
HTSCK	76094	1.5

Lead time: 1 working day

Tips Required per Cleaner Size

in.	18	24	30	36	42	48	54	60	72
mm	450	600	750	900	1050	1200	1350	1500	1800
C-Tips Required	3	4	5	6	7	8	9	10	12

Product Notes:

- The High Temp Secondary works in ambient temperatures up to 400°F (204°C) with spikes to 450°F (232°C).
- Works with mechanical fasteners.

Pole Length Specifications

BELT WIDTH		BLADE WIDTH		POLE LENGTH		MAXIMUM CONVEYOR SPAN	
in.	mm	in.	mm	in.	mm	in.	mm
18	450	18	450	52	1300	47	1175
24	600	24	600	58	1450	53	1325
30	750	30	750	64	1600	59	1475
36	900	36	900	70	1750	65	1625
42	1050	42	1050	76	1900	71	1775
48	1200	48	1200	82	2050	77	1925
54	1350	54	1350	88	2200	83	2075
60	1500	60	1500	94	2350	89	2225
72	1800	72	1800	106	2650	101	2525

Pole Diameter – 2-3/8" (60mm) on 18" - 54" (450-1350mm)
Pole Diameter – 2-7/8" (73mm) on 60" - 72" (1500-1800mm)

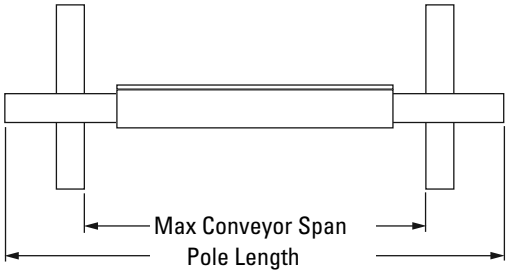

Clearance Guidelines for Installation

HORIZONTAL CLEARANCE REQUIRED		VERTICAL CLEARANCE REQUIRED	
in.	mm	in.	mm
4	100	8 1/2 for 18"-54"	213
		9 1/2 for 60"-72"	238

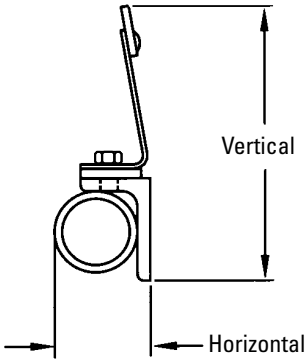

Specifications:

- Maximum Belt Speed .....700 FPM (3.5M/sec)
- Temperature Rating (EZS2).....-30°F to 200°F (-35°C to 93°C)
- Temperature Rating (EZS2 High-Temp).....Up to 400°F (204°C) with spikes to 450°F (232°C)
- Usable Blade Wear Length.....3/8" (9mm)
- Blade Material .....Impact Resistant Tungsten Carbide (works with mechanical fasteners)
- Available for Belt Widths .....18" to 72" (450 to 1800mm)
- CEMA Cleaner Rating .....Class 3

Replacement Parts List

EZS2
Standard Duty Secondary Cleaner

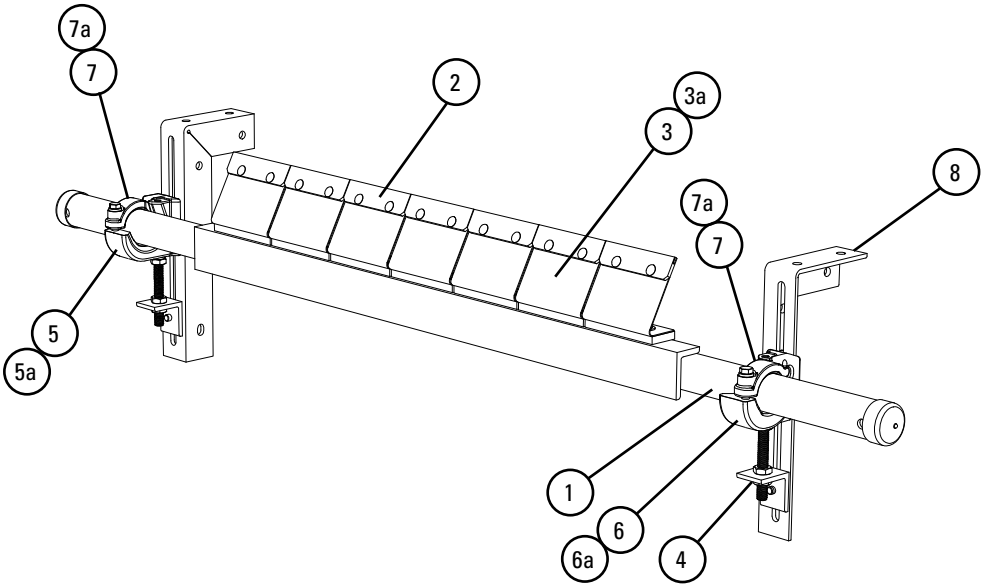

Replacement Parts

REF	DESCRIPTION	ORDERING NUMBER	ITEM CODE	WT. LBS.
1	18" (450mm) Pole	EZS2P18	75652	25.0
	24" (600mm) Pole	EZS2P24	75653	28.0
	30" (750mm) Pole	EZS2P30	75654	30.0
	36" (900mm) Pole	EZS2P36	75655	34.0
	42" (1050mm) Pole	EZS2P42	75656	36.0
	48" (1200mm) Pole	EZS2P48	75657	39.0
	54" (1350mm) Pole	EZS2P54	75658	42.0
	60" (1500mm) Pole	EZS2P60	75659	77.0
	72" (1800mm) Pole	EZS2P72	75660	89.0
2	C-Tip Kit* (1 ea.)	ICT6	74535	0.7
3	FormFlex™ Cushion Kit* (incl. 1 cushion & 1 pad)	FFCK	75661	1.5
3a	High Temp Replacement Cushion Kit (incl. 1 cushion & 1 pad)	HTSCK	76094	1.5
4	Adjusting Bracket Kit* (1 ea.)	PAB	75513	1.5
5	Pole Clamp Kit LEFT* (1 ea.) (incl. item 7) (for sizes 18"-54" (450-1350mm)	CCKL	79224	6.8
5a	HD Pole Clamp Kit LEFT* (1 ea.) (incl. item 7a) for sizes 60"-72" (1500-1800mm)	CCKHDL	79225	8.7
6	Pole Clamp Kit RIGHT* (1 ea.) (incl. item 7) for sizes 18"-54" (450-1350mm)	CCKR	79228	6.8
6a	HD Pole Clamp Kit RIGHT* (1 ea.) (incl. item 7a) for sizes 60"-72" (1500-1800mm)	CCKHDR	79229	8.7
7	Cradle Clamp Top Strap (1 ea.) for use on L or R Pole Clamp Kit	CCKTS	79232	1.1
7a	HD Cradle Clamp Top Strap (1 ea.) for use on L or R HD Pole Clamp Kit	CCKHDTS	79233	1.7
8	Mounting Bracket Kit (1 Right and 1 Left)	EZS2MBK	75666	13.0
–	Cradle Clamp Mounting Kit* for sizes 18"-54" (450-1350mm) (incl. 2 ea. Items 4 and 1 ea. Items 5, 6 & 8)	CCMK	78919	33.0
–	HD Cradle Clamp Mounting Kit* for sizes 60"-72" (1500-1800mm) (incl. 2 ea. Items 4 and 1 ea. Items 5a, 6a & 8)	CCMKHD	78920	36.7

*Hardware Included Lead time: 1 working day

Mounting Kit Selection Chart

Cleaner Width	78919 CCMK	78920 CCMKHD
EZS2 18" - 54" (450 - 1350mm)	X	
EZS2 60" - 72" (1500 - 1800mm)		X

Cleaner Tips and Cushions Required Per Cleaner Size

in.	mm	Tips Required
18	450	3
24	600	4
30	750	5
36	900	6
42	1050	7
48	1200	8
54	1350	9
60	1500	10
72	1800	12

Product Ordering Information

Y-Type™ Standard Duty
Secondary Cleaner with Carbide or Polyurethane Blades and YST Tensioner

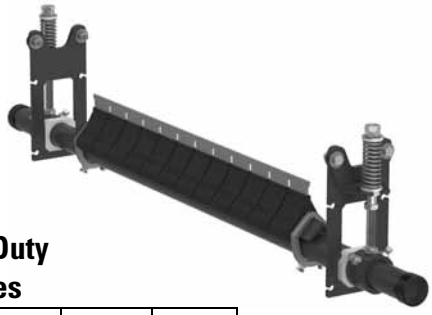

Y-Type™ Standard Duty with Carbide Blades

BELT WIDTH		ORDERING NUMBER	ITEM CODE	WT. LBS.
in.	mm			
18	450	YT-TC-18S	79759	55.0
24	600	YT-TC-24S	79760	60.0
30	750	YT-TC-30S	79761	65.0
36	900	YT-TC-36S	79762	70.0
42	1050	YT-TC-42S	79763	76.0
48	1200	YT-TC-48S	79764	82.0

Lead time: 1 working day

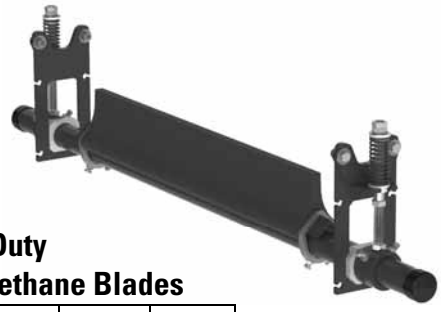

Y-Type™ Standard Duty with Purple Polyurethane Blades

BELT WIDTH		ORDERING NUMBER	ITEM CODE	WT. LBS.
in.	mm			
18	450	YT-18S	79765	59.0
24	600	YT-24S	79766	65.0
30	750	YT-30S	79767	71.0
36	900	YT-36S	79768	77.0
42	1050	YT-42S	79769	83.0
48	1200	YT-48S	79770	89.0

Lead time: 1 working day

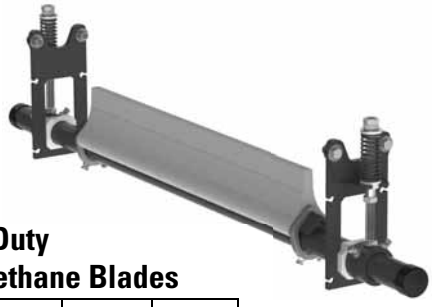

Y-Type™ Standard Duty with White Polyurethane Blades

BELT WIDTH		ORDERING NUMBER	ITEM CODE	WT. LBS.
in.	mm			
18	450	YTW-18S	79771	59.0
24	600	YTW-24S	79772	65.0
30	750	YTW-30S	79773	71.0
36	900	YTW-36S	79774	77.0
42	1050	YTW-42S	79775	83.0
48	1200	YTW-48S	79776	89.0

Lead time: 1 working day

Y-Type™ Standard Duty with Red UHT Polyurethane Blades

BELT WIDTH		ORDERING NUMBER	ITEM CODE	WT. LBS.
in.	mm			
18	450	YTR-18S	91798	59.0
24	600	YTR-24S	91799	65.0
30	750	YTR-30S	91800	71.0
36	900	YTR-36S	91801	77.0
42	1050	YTR-42S	91802	83.0
48	1200	YTR-48S	91803	89.0

Lead time: 1 working day

Optional YST Drop Brackets (2)

ORDERING NUMBER	ITEM CODE	WT. LBS.
YSTDBK	79844	19.7

Lead time: 1 working day

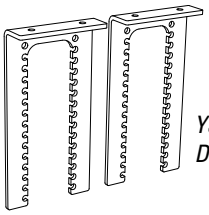

YST Standard Duty Drop Brackets

Product Notes:

- Works on reversing belts, vulcanized belts, and belts with mechanical fasteners.
- Pole Length: Belt width plus 30" (750mm). For longer requirements, see Installation Accessories – Pole Extender Kit (155).
- Visual Blade Tension Check: Measure the tension spring and refer to Spring Length Chart on mounting base for the correct length for best cleaning performance.
- Tensioner: Standard Duty YST Spring Tensioner for self-adjusting tensioning with easy retensioning adjustments. The tensioner can be mounted in pull-up or push-up position.
- To make cleaner installation easier and quicker, see Optional Mounting Kits on replacement parts page or 155.
- Simple design makes changing the blades fast and easy. Blades can be removed and replaced individually, or all at once by replacing the cartridge.

Product Ordering Information

Y-Type™ Standard Duty
Secondary Cleaner with Carbide or Polyurethane Blades and YST Tensioner

Replacement Blades/Cartridges Standard Duty Carbide

BELT WIDTH		ORDERING NUMBER	ITEM CODE	WT. LBS.
in.	mm			
-	-	YT-C*	79574	1.1
18	450	YCART-18/450-TC	79811	12.6
24	600	YCART-24/600-TC	79812	16.5
30	750	YCART-30/750-TC	79813	20.4
36	900	YCART-36/900-TC	79814	24.2
42	1050	YCART-42/1050-TC	79815	28.1
48	1200	YCART-48/1200-TC	79816	31.9

*Single 3" blade segment
Lead time: 1 working day

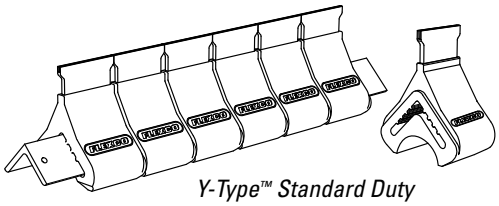

Y-Type™ Standard Duty Carbide Blade Cartridge

Replacement Blades/Cartridges Standard Duty Purple Polyurethane

BELT WIDTH		ORDERING NUMBER	ITEM CODE	WT. LBS.
in.	mm			
-	-	YT-P*	79573	1.2
18	450	YCART-18/450-P	79617	13.1
24	600	YCART-24/600-P	79618	17.1
30	750	YCART-30/750-P	79619	21.1
36	900	YCART-36/900-P	79620	25.1
42	1050	YCART-42/1050-P	79621	29.1
48	1200	YCART-48/1200-P	79622	33.1

*Single 3" blade segment
Lead time: 1 working day

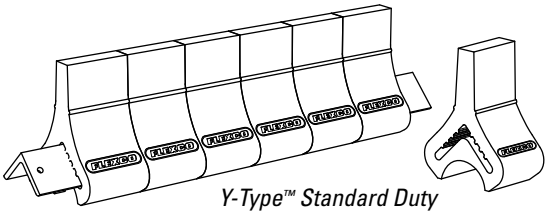

Y-Type™ Standard Duty Polyurethane Blade Cartridge

Replacement Blades/Cartridges Standard Duty White† Polyurethane

BELT WIDTH		ORDERING NUMBER	ITEM CODE	WT. LBS.
in.	mm			
-	-	YT-W*	79572	1.2
18	450	YCART-18/450-W	79611	13.1
24	600	YCART-24/600-W	79612	17.1
30	750	YCART-30/750-W	79613	21.1
36	900	YCART-36/900-W	79614	25.1
42	1050	YCART-42/1050-W	79615	29.1
48	1200	YCART-48/1200-W	79616	33.1

*Single 3" blade segment
†White blades are chemical resistant, and all ingredients used in Polyurethane formulation comply with the relevant requirements of 21 CFR (FDA Code of Federal Regulations) for use in repeated bulk dry food applications.
Lead time: 1 working day

Replacement Blades/Cartridges Standard Duty Red UHT Polyurethane

BELT WIDTH		ORDERING NUMBER	ITEM CODE	WT. LBS.
in.	mm			
-	-	YT-R*	91804	1.2
18	450	YCART-18/450-R	91805	13.1
24	600	YCART-24/600-R	91806	17.1
30	750	YCART-30/750-R	91807	21.1
36	900	YCART-36/900-R	91808	25.1
42	1050	YCART-42/1050-R	91809	29.1
48	1200	YCART-48/1200-R	91810	33.1

*Single 3" blade segment
Lead time: 1 working day

Pole Length Specifications

Cleaner Size		Pole Length		Maximum Conveyor Span	
in.	mm	in.	mm	in.	mm
18	450	48	1200	40	1025
24	600	54	1350	46	1175
30	750	60	1500	52	1325
36	900	66	1650	58	1475
42	1050	72	1800	64	1625
48	1200	78	1950	70	1775

Pole Length – Belt +30" (750mm)
Pole Diameter – 2-3/8" (60mm)

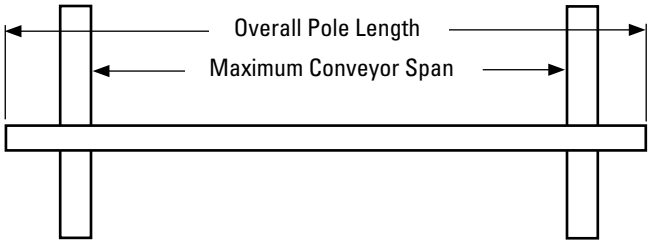

Clearance Guidelines for Installation

Cleaner Type	Belt Width/ Cleaner Size		Horizontal Clearance Required		Vertical Clearance Required	
	in.	mm	in.	mm	in.	mm
Y-Type® Polyurethane	18 - 48	450 - 1200	4-1/4	110	8-1/4	210
Y-Type Carbide	18 - 48	450 - 1200	4-1/4	110	7-3/4	184

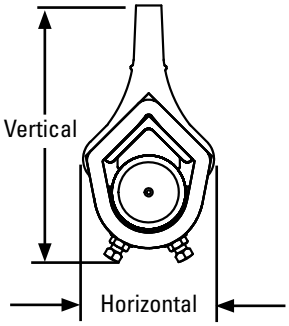

Y-Type Blade Specifications

Cushion	Durometer	Temperature Range
Purple (Standard)	83A	-30° to 180° F -35° to 82° C
White (Food Grade) ‡	83A	-30° to 180° F -35° to 82° C
Red (Ultra High-Temp)	93A	Up to 400° F (200° C) Spikes to 450° F (232° C)
Carbide	83A	-30° to 180° F -35° to 82° C

‡ All ingredients used in the polyurethane formulation of this blade comply with the relevant requirements of 21 CFR (FDA Code of Federal Regulations) for use in repeated bulk dry food applications

Spring Length Chart

Blade Width		Carbide Tip		Purple or White Polyurethane Tip				Red UHT Polyurethane Tip			
		Silver Springs		Yellow Springs		Purple Springs		Yellow Springs		Purple Springs	
in.	mm	in.	mm	in.	mm	in.	mm	in.	mm	in.	mm
18	450	4 1/8	105	3 1/4	83	3 5/8	92	3 1/8	79	3 5/8	92
24	600	4	102	2 7/8	73	3 3/8	86	2 3/4	70	3 3/8	86
30	750	3 7/8	98	2 5/8	67	3 1/8	79	2 1/2	64	3 1/8	79
36	900	3 3/4	95	2 1/4	57	2 7/8	73	2 1/4	57	2 7/8	73
42	1050	3 5/8	92	NA	NA	2 5/8	67	NA	NA	2 5/8	67
48	1200	3 1/2	89	NA	NA	2 3/8	60	NA	NA	2 3/8	60

Shading indicates preferred spring option.

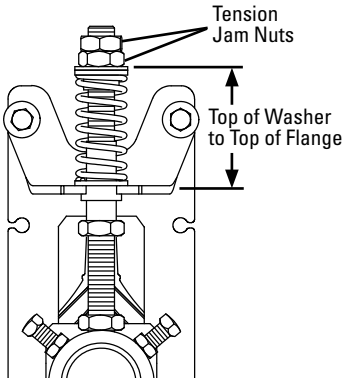

Pull-Up Tensioner Configuration (SD)

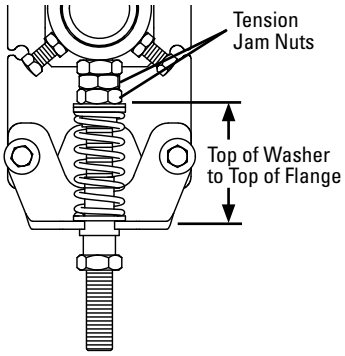

Push-Up Tensioner Configuration (SD)

Specifications:

- Maximum Belt Speed .....600 FPM (3M/sec)
- Usable Blade Wear Length.....2" (50mm) (Polyurethane)
  1/4" (6mm) (Carbide)
- Blade Materials .....Purple: Polyurethane (proprietary blend for abrasion resistance and long wear)
  White: Polyurethane (chemical resistant/food grade)
  Red: Polyurethane (ultra high-temp)
  Carbide: Tungsten Carbide
- Available for Belt Widths .....18" to 48" (450 to 1200mm). Other sizes available upon request.
- CEMA Cleaner Rating .....Class 2 (Standard-duty with polyurethane blades)
  Class 3 (Standard-duty with carbide blades)

Replacement Parts List

Y-Type™ Standard Duty
Secondary Cleaner with YST Tensioner

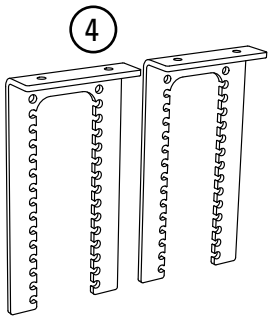

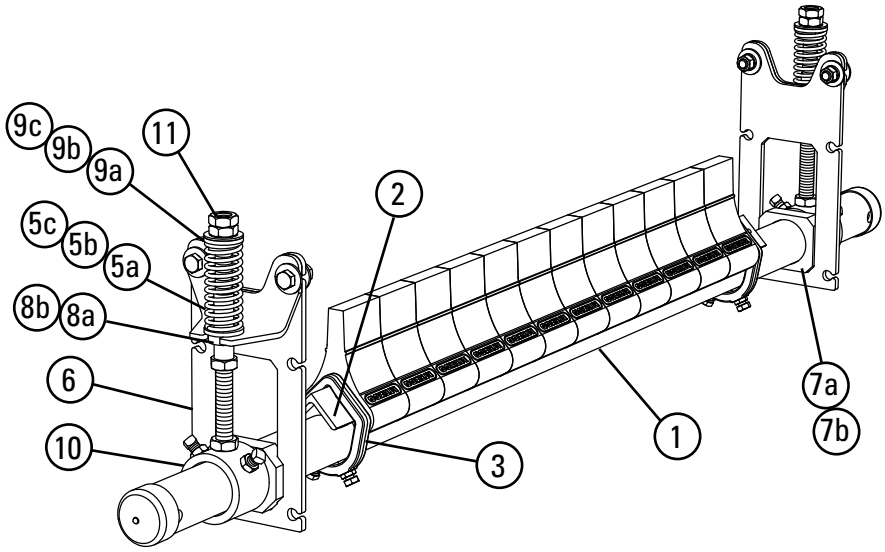

Blades Required per Cleaner Size

in.	18	24	30	36	42	48
mm	450	600	750	900	1050	1200
Blades Required	6	8	10	12	14	16

Replacement Parts

REF	DESCRIPTION	ORDERING NUMBER	ITEM CODE	WT. LBS.
1	18" (450mm) Y-Type™ Pole	YTP-18/450	79587	20.2
	24" (600mm) Y-Type Pole	YTP-24/600	79588	22.7
	30" (750mm) Y-Type Pole	YTP-30/750	79589	25.2
	36" (900mm) Y-Type Pole	YTP-36/900	79590	27.7
	42" (1050mm) Y-Type Pole	YTP-42/1050	79591	30.2
	48" (1200mm) Y-Type Pole	YTP-48/1200	79592	32.7
2	18" (450mm) Y-Type Cushion Angle	YTA-18/450	79593	5.7
	24" (600mm) Y-Type Cushion Angle	YTA-24/600	79594	7.3
	30" (750mm) Y-Type Cushion Angle	YTA-30/750	79595	8.9
	36" (900mm) Y-Type Cushion Angle	YTA-36/900	79596	10.4
	42" (1050mm) Y-Type Cushion Angle	YTA-42/1050	79597	12.0
	48" (1200mm) Y-Type Cushion Angle	YTA-48/1200	79598	13.6
3	Y-Type Angle Clamp* (2 Clamps)	YTAC	79623	2.2
4	YST Drop Bracket Kit (2 Brackets)	YSTDBK	79844	19.7
5a	YST Spring Yellow	YSTS-Y	79795	0.3
5b	YST Spring Purple	YSTS-P	79796	0.4
5c	YST Spring Silver (Y-Type Carbide Cleaners)	CTS-S	77743	0.5
6	YST Mounting Bracket (incl. Angle Bracket)	YSTMB	79843	3.3
7a	YST Guide Block Kit (Pair)	YSTGBK	79845	0.4
7b	YST Guide Block Kit UHT (Pair)	YSTGBK-R	91811	0.4
8a	YST Lower Bushing Kit (Pair)	YSTLBK	79846	0.1
8b	YST Lower Bushing Kit UHT (Pair)	YSTLBK-R	91812	0.1
9a	YST Top Bushing Kit White (Pair)	YSTTBK-W	79847	0.1
9b	YST Top Bushing Kit Black (Pair)	YSTTBK-B	79855	0.1
9c	YST Top Bushing Kit UHT (Pair)	YSTBKPU-R	91813	0.1
10	YST Pole Mount Kit*	YSTPMK	79848	4.3
11	YST Adjusting Rod Nut Kit	YSTANK	79857	0.2
-	YST Tensioner w/Yellow Spring (Pair) (incl. 2 ea. item 5a, 6, 10, 11; 1 ea. items 7a, 8a, 9a)	YST-Y	79836	18.2
-	YST Tensioner w/Purple Spring (Pair) (incl. 2 ea. item 5b, 6, 10, 11; 1 ea. items 7a, 8a, 9a)	YST-P	79837	18.5
-	YST Tensioner w/Silver Spring (Pair) (incl. 2 ea. item 5c, 6, 10, 11; 1 ea. items 7a, 8a, 9b)	YST-S	79838	18.8
-	YST Tensioner w/Yellow Spring UHT (Pair) (incl. 2 ea. item 5a, 6, 10, 11; 1 ea. items 7b, 8b, 9c)	YST-Y-R	91814	18.2
-	YST Tensioner w/Purple Spring UHT (Pair) (incl. 2 ea. item 5b, 6, 10, 11; 1 ea. items 7b, 8b, 9c)	YST-P-R	91815	18.5

*Hardware included
Lead time: 1 working day

Replacement Blades/Blade Cartridges

REF	DESCRIPTION	ORDERING NUMBER	ITEM CODE	WT. LBS.
12	Y-Type Carbide Blade (single)	YT-C	79574	1.1
13	18" (450mm) Y-Type Carbide Blade Cartridge	YCART-18/450-TC	79811	12.6
	24" (600mm) Y-Type Carbide Blade Cartridge	YCART-24/600-TC	79812	16.5
	30" (750mm) Y-Type Carbide Blade Cartridge	YCART-30/750-TC	79813	20.4
	36" (900mm) Y-Type Carbide Blade Cartridge	YCART-36/900-TC	79814	24.2
	42" (1050mm) Y-Type Carbide Blade Cartridge	YCART-42/1050-TC	79815	28.1
	48" (1200mm) Y-Type Carbide Blade Cartridge	YCART-48/1200-TC	79816	31.9
14	Y-Type Purple Polyurethane Blade (single)	YT-P	79573	1.2
15	18" (450mm) Y-Type Purple Blade Cartridge	YCART-18/450-P	79617	13.1
	24" (600mm) Y-Type Purple Blade Cartridge	YCART-24/600-P	79618	17.1
	30" (750mm) Y-Type Purple Blade Cartridge	YCART-30/750-P	79619	21.1
	36" (900mm) Y-Type Purple Blade Cartridge	YCART-36/900-P	79620	25.1
	42" (1050mm) Y-Type Purple Blade Cartridge	YCART-42/1050-P	79621	29.1
	48" (1200mm) Y-Type Purple Blade Cartridge	YCART-48/1200-P	79622	33.1
16	Y-Type White Polyurethane Blade (single)	YT-W	79572	1.2
17	18" (450mm) Y-Type White Blade Cartridge	YCART-18/450-W	79611	13.1
	24" (600mm) Y-Type White Blade Cartridge	YCART-24/600-W	79612	17.1
	30" (750mm) Y-Type White Blade Cartridge	YCART-30/750-W	79613	21.1
	36" (900mm) Y-Type White Blade Cartridge	YCART-36/900-W	79614	25.1
	42" (1050mm) Y-Type White Blade Cartridge	YCART-42/1050-W	79615	29.1
	48" (1200mm) Y-Type White Blade Cartridge	YCART-48/1200-W	79616	33.1
18	Y-Type Red Polyurethane Blade (single)	YT-R	91804	1.2
19	18" (450mm) Y-Type Red Blade Cartridge	YCART-18/450-R	91805	13.1
	24" (600mm) Y-Type Red Blade Cartridge	YCART-24/600-R	91806	17.1
	30" (750mm) Y-Type Red Blade Cartridge	YCART-30/750-R	91807	21.1
	36" (900mm) Y-Type Red Blade Cartridge	YCART-36/900-R	91808	25.1
	42" (1050mm) Y-Type Red Blade Cartridge	YCART-42/1050-R	91809	29.1
	48" (1200mm) Y-Type Red Blade Cartridge	YCART-48/1200-R	91810	33.1

Lead time: 1 working day

Spring Tensioner Selection Chart

Cleaner Blade Width	79838 YST-S	79836 YST-Y	79837 YST-P	91814 YST-Y-R	91815 YST-P-R
Carbide 18" - 48" (450 - 1200mm)	X				
Polyurethane 18" - 30" (450 - 750mm)		X			
Polyurethane 36" - 48" (900 - 1200mm)			X		
Red Polyurethane 18" - 30" (450 - 750mm)				X	
Red Polyurethane 36" - 48" (900 - 1200mm)					X

Product Ordering Information

Y-Type™ Heavy Duty
Secondary Cleaner with HD Carbide or Urethane Blades and YST Tensioner

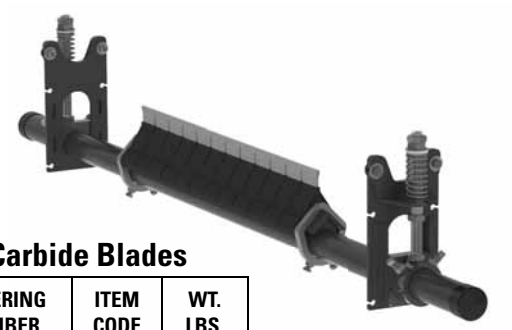

Y-Type™ HD with Carbide Blades

BELT WIDTH		ORDERING NUMBER	ITEM CODE	WT. LBS.
in.	mm			
36	900	YTHD-TC-36S	79777	130.0
42	1050	YTHD-TC-42S	79778	142.4
48	1200	YTHD-TC-48S	79779	151.9
54	1350	YTHD-TC-54S	79780	161.5
60	1500	YTHD-TC-60S	79781	171.0
72	1800	YTHD-TC-72S	79782	190.1

Lead time: 1 working day

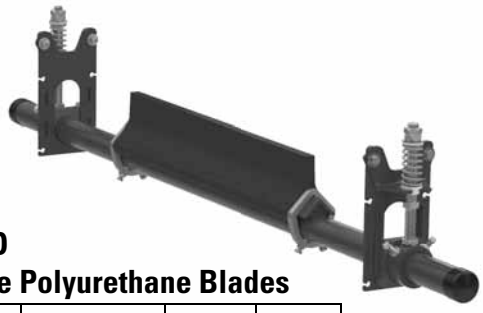

Y-Type™ HD with Purple Polyurethane Blades

BELT WIDTH		ORDERING NUMBER	ITEM CODE	WT. LBS.
in.	mm			
36	900	YTHD-36S	79783	131.0
42	1050	YTHD-42S	79784	140.3
48	1200	YTHD-48S	79785	149.5
54	1350	YTHD-54S	79786	158.8
60	1500	YTHD-60S	79787	168.0
72	1800	YTHD-72S	79788	186.5

Lead time: 1 working day

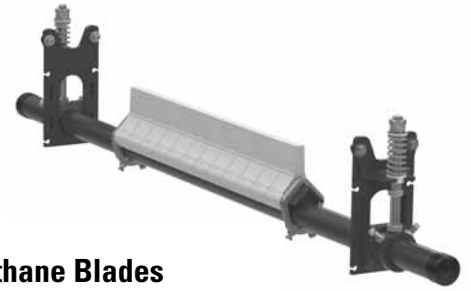

Y-Type™ HD with White Polyurethane Blades

BELT WIDTH		ORDERING NUMBER	ITEM CODE	WT. LBS.
in.	mm			
36	900	YTHDW-36S	79789	131.0
42	1050	YTHDW-42S	79790	140.3
48	1200	YTHDW-48S	79791	149.5
54	1350	YTHDW-54S	79792	158.8
60	1500	YTHDW-60S	79793	168.0
72	1800	YTHDW-72S	79794	186.5

Lead time: 1 working day

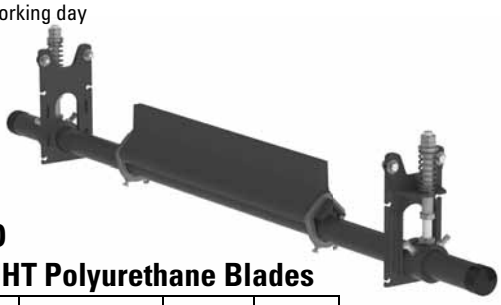

Y-Type™ HD with Red UHT Polyurethane Blades

BELT WIDTH		ORDERING NUMBER	ITEM CODE	WT. LBS.
in.	mm			
36	900	YTHDR-36S	91816	131.0
42	1050	YTHDR-42S	91817	140.3
48	1200	YTHDR-48S	91818	149.5
54	1350	YTHDR-54S	91819	158.8
60	1500	YTHDR-60S	91820	168.0
72	1800	YTHDR-72S	91821	186.5

Lead time: 1 working day

Optional YST Drop Brackets (2)

ORDERING NUMBER	ITEM CODE	WT. LBS.
YSTHDDBK	79850	32.1

Lead time: 1 working day

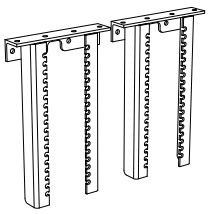

Product Notes:

- Works on reversing belts, vulcanized belts, and belts with mechanical fasteners.
- Pole Length: Belt width plus 54" (1350mm). For longer requirements, see Installation Accessories – Pole Extender Kit (155).
- Visual Blade Tension Check: Measure tension spring and refer to Spring Length Chart on mounting base for correct length for best cleaning performance.
- Tensioner: Standard Duty YST Spring Tensioner for self-adjusting tensioning with easy retensioning adjustments. The tensioner can be mounted in pull-up or push-up position.
- To make cleaner installation easier and quicker, see Optional Mounting Kits on replacement parts page or 155.
- Simple design makes changing the blades fast and easy. Blades can be removed and replaced individually, or all at once by replacing the cartridge.

Product Ordering Information

Y-Type™ Heavy Duty
Secondary Cleaner with HD Carbide or Urethane Blades and YST Tensioner

Replacement Blades/Cartridges HD Carbide

BELT WIDTH		ORDERING NUMBER	ITEM CODE	WT. LBS.
in.	mm			
-	-	YT-HDC*	79728	1.8
36	900	YCART-36/900-HDTC	79829	38.4
42	1050	YCART-42/1050-HDTC	79830	44.5
48	1200	YCART-48/1200-HDTC	79831	50.6
54	1350	YCART-54/1350-HDTC	79832	56.8
60	1500	YCART-60/1500-HDTC	79833	62.9
72	1800	YCART-72/1800-HDTC	79834	75.2

*Single 3" blade segment
Lead time: 1 working day

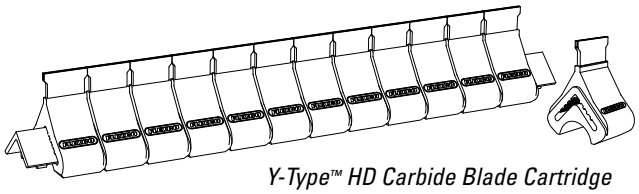

Y-Type™ HD Carbide Blade Cartridge

Replacement Blades/Cartridges HD Purple Polyurethane

BELT WIDTH		ORDERING NUMBER	ITEM CODE	WT. LBS.
in.	mm			
-	-	YT-HDP*	79677	1.7
36	900	YCART-36/900-HDP	79817	36.5
42	1050	YCART-42/1050-HDP	79818	42.3
48	1200	YCART-48/1200-HDP	79819	48.1
54	1350	YCART-54/1350-HDP	79820	53.9
60	1500	YCART-60/1500-HDP	79821	59.8
72	1800	YCART-72/1800-HDP	79822	71.4

*Single 3" blade segment
Lead time: 1 working day

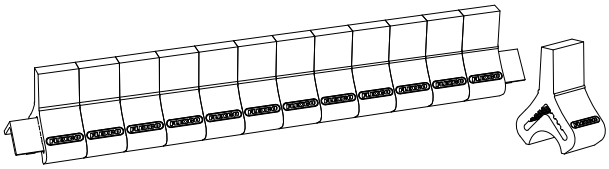

Y-Type™ HD Polyurethane Blade Cartridge

Replacement Blades/Cartridges HD White† Polyurethane

BELT WIDTH		ORDERING NUMBER	ITEM CODE	WT. LBS.
in.	mm			
-	-	YT-HDW*	79676	1.7
36	900	YCART-36/900-HDW	79823	36.5
42	1050	YCART-42/1050-HDW	79824	42.3
48	1200	YCART-48/1200-HDW	79825	48.1
54	1350	YCART-54/1350-HDW	79826	53.9
60	1500	YCART-60/1500-HDW	79827	59.8
72	1800	YCART-72/1800-HDW	79828	71.4

*Single 3" blade segment
†White blades are chemical resistant, and all ingredients used in Polyurethane formulation comply with the relevant requirements of 21 CFR (FDA Code of Federal Regulations) for use in repeated bulk dry food applications.
Lead time: 1 working day

Replacement Blades/Cartridges HD Red UHT Polyurethane

BELT WIDTH		ORDERING NUMBER	ITEM CODE	WT. LBS.
in.	mm			
-	-	YT-HDR*	91822	1.7
36	900	YCART-36/900-HDR	91823	36.5
42	1050	YCART-42/1050-HDR	91824	42.3
48	1200	YCART-48/1200-HDR	91825	48.1
54	1350	YCART-54/1350-HDR	91826	53.9
60	1500	YCART-60/1500-HDR	91827	59.8
72	1800	YCART-72/1800-HDR	91828	71.4

*Single 3" blade segment
Lead time: 1 working day

Specifications & Guidelines

Y-Type™ Heavy Duty
Secondary Cleaner with YST Tensioner

Pole Length Specifications

Cleaner Size		Pole Length		Maximum Conveyor Span	
in.	mm	in.	mm	in.	mm
36	900	90	2286	82	2083
42	1050	96	2438	88	2235
48	1200	102	2590	94	2388
54	1350	108	2743	100	2540
60	1500	114	2895	106	2692
72	1800	126	3200	118	2997

Pole Length – Belt +54" (1350mm)
Pole Diameter – 2-7/8" (73mm)

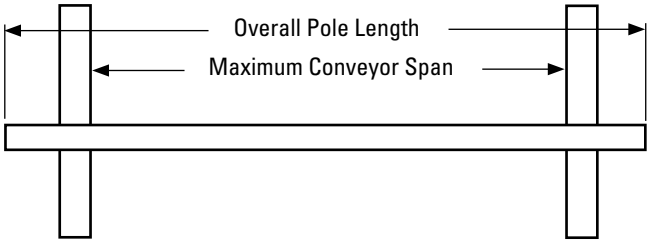

Clearance Guidelines for Installation

Cleaner Type	Belt Width/ Cleaner Size		Horizontal Clearance Required		Vertical Clearance Required	
	in.	mm	in.	mm	in.	mm
Y-Type® HD Polyurethane	36 - 72	900 - 1800	5-1/4	133	9-1/2	241
Y-Type HD Carbide	36 - 72	900 - 1800	5-1/4	133	9-3/4	248

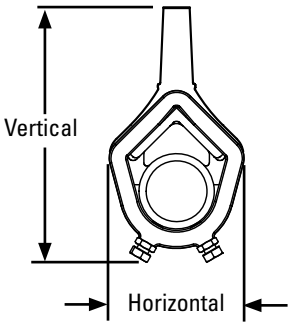

Y-Type Blade Specifications

Cushion	Durometer	Temperature Range
Purple (Standard)	83A	-30° to 180°F -35° to 82° C
White (Food Grade) ‡	83A	-30° to 180°F -35° to 82° C
Red (Ultra High-Temp)	93A	Up to 400° F (200° C) Spikes to 450° F (232° C)
Carbide	83A	-30° to 180°F -35° to 82° C

‡ All ingredients used in the polyurethane formulation of this blade comply with the relevant requirements of 21 CFR (FDA Code of Federal Regulations) for use in repeated bulk dry food applications

Spring Length Chart

Blade Width		Carbide Tip				Polyurethane Tip			
		Silver Springs		Black Springs		Green Springs		Blue Springs	
in.	mm	in.	mm	in.	mm	in.	mm	in.	mm
36	900	3 7/8	98	4	102	3	76	3 3/8	86
42	1050	3 3/4	95	3 7/8	98	2 7/8	73	3 1/4	83
48	1200	3 5/8	92	3 3/4	95	2 5/8	67	3 1/8	79
54	1350	3 1/2	89	3 3/4	95	2 1/2	64	3	76
60	1500	3 3/8	86	3 5/8	92	NA	NA	2 7/8	73
72	1800	3 1/4	83	3 1/2	89	NA	NA	2 1/2	64

Shading indicates preferred spring option.

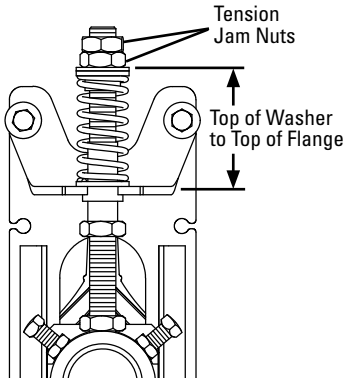

Pull-Up Tensioner Configuration (HD)

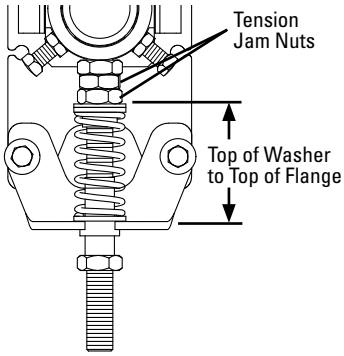

Push-Up Tensioner Configuration (HD)

Specifications:

- Maximum Belt Speed .....750 FPM (3.8M/sec)
- Usable Blade Wear Length.....3" (76mm) (Polyurethane)
  3/8" (10mm) (Carbide)
- Blade Materials .....Purple: Polyurethane (proprietary blend for abrasion resistance and long wear)
  White: Polyurethane (chemical resistant/food grade)
  Red: Polyurethane (ultra high-temp)
  Carbide: Tungsten Carbide
- Available for Belt Widths .....36" to 72" (900 to 1800mm). Other sizes available upon request
- CEMA Cleaner Rating .....Class 3 (Heavy-duty with polyurethane or carbide blades)

Replacement Parts List

Y-Type™ Heavy Duty
Secondary Cleaner with YST Tensioner

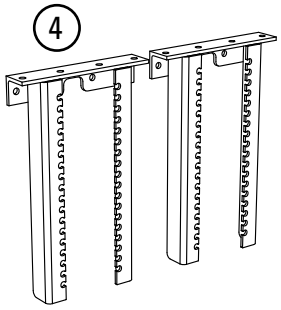

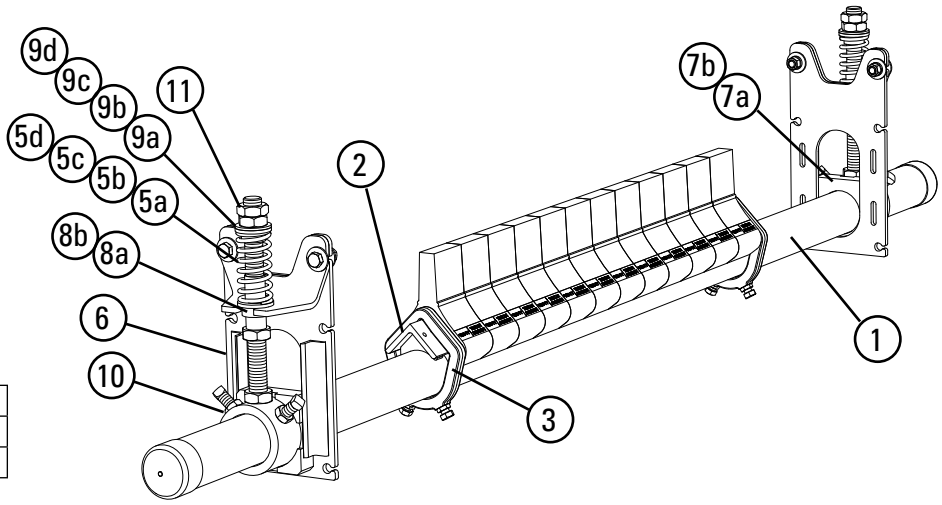

Blades Required per Cleaner Size

in.	36	42	48	54	60	72
mm	900	1050	1200	1350	1500	1800
Blades Required	12	14	16	18	20	24

Replacement Parts

REF	DESCRIPTION	ORDERING NUMBER	ITEM CODE	WT. LBS.
1	36" (900mm) Y-Type HD Pole	YTPHD-36/900	79799	60.0
	42" (1050mm) Y-Type HD Pole	YTPHD-42/1050	79800	63.4
	48" (1200mm) Y-Type HD Pole	YTPHD-48/1200	79801	66.8
	54" (1350mm) Y-Type HD Pole	YTPHD-54/1350	79802	70.2
	60" (1500mm) Y-Type HD Pole	YTPHD-60/1500	79803	73.6
	72" (1800mm) Y-Type HD Pole	YTPHD-72/1800	79804	77.0
2	36" (900mm) Y-Type HD Cushion Angle	YTAHD-36/900	79805	16.5
	42" (1050mm) Y-Type HD Cushion Angle	YTAHD-42/1050	79806	18.9
	48" (1200mm) Y-Type HD Cushion Angle	YTAHD-48/1200	79807	21.4
	54" (1350mm) Y-Type HD Cushion Angle	YTAHD-54/1350	79808	23.9
	60" (1500mm) Y-Type HD Cushion Angle	YTAHD-60/1500	79809	26.3
	72" (1800mm) Y-Type HD Cushion Angle	YTAHD-72/1800	79810	31.3
3	Y-Type HD Angle Clamp* (2 Clamps)	YTACHD	79835	4.8
4	YST HD Drop Bracket Kit (2 Brackets)	YSTHDDBK	79850	32.1
5a	YST HD Spring, Green	YSTHDS-GR	79797	0.5
5b	SST Spring, Silver	STS-S	75843	0.8
5c	YST HD Spring, Blue (for Y-Type HD Carbide Cleaners)	YSTHDS-BL	79798	0.6
5d	SST Spring, Black (for Y-Type HD Carbide Cleaners)	STS-B	75844	1.1
6	YST HD Mounting Bracket (incl. Angle Bracket)	YSTHDMB	79849	6.7
7a	YST HD Guide Block Kit (Pair)	YSTHDGBK	79851	1.0
7b	YST HD Guide Block Kit UHT (Pair)	YSTHDGBK-R	91829	1.0
8a	YST HD Lower Bushing Kit (Pair)	YSTHDLBK	79852	0.1
8b	YST HD Lower Bushing Kit UHT (Pair)	YSTHDLBK-R	91830	0.1
9a	YST HD Top Bushing Kit White (Pair)	YSTHDBK-W	79853	0.1
9b	YST HD Top Bushing Kit Black (Pair)	YSTHDBK-B	79856	0.1
9c	YST HD Top Bushing Kit Green (Pair)	YSTHDBK-GR-R	91832	0.1
9d	YST HD Top Bushing Kit Blue (Pair)	YSTHDBK-BL-R	91831	0.1
10	YST HD Pole Mount Kit*	YSTPHDMK	79854	7.8
11	YST HD Adjusting Rod Nut Kit	YSTANKHD	79858	0.6
-	YST Tensioner w/Silver Spring (Pair) (for belts 36" - 54" w/carbide tips) (incl. 2 ea. item 5b, 6, 10, 11; 1 ea. items 7a, 8a, 9a)	YSTHD-S	79840	33.4
-	YST Tensioner w/Black Spring (Pair) (for belts 60" - 72" w/carbide tips) (incl. 2 ea. item 5d, 6, 10, 11; 1 ea. items 7a, 8a, 9b)	YSTHD-BK	79842	34.1
-	YST Tensioner w/Green Spring (Pair) (for belts 36" - 48" w/Polyurethane tips) (incl. 2 ea. item 5a, 6, 10, 11; 1 ea. items 7a, 8a, 9a)	YSTHD-GR	79839	32.8
-	YST Tensioner w/Blue Spring (Pair) (for belts 54" - 72" w/Polyurethane tips) (incl. 2 ea. item 5c, 6, 10, 11; 1 ea. items 7a, 8a, 9b)	YSTHD-BL	79841	33.1
-	YST Tensioner w/Green Spring UHT (Pair) (for belts 36" - 48" w/ UHTPolyurethane tips) (incl. 2 ea. item 5a, 6, 10, 11; 1 ea. items 7b, 8b, 9c)	YSTHD-GR-R	91833	32.8
-	YST Tensioner w/Blue Spring UHT (Pair) (for belts 54" - 72" w/UHT Polyurethane tips) (incl. 2 ea. item 5c, 6, 10, 11; 1 ea. items 7b, 8b, 9d)	YSTHD-BL-R	91834	33.1

*Hardware included Lead time: 1 working day

Replacement Blades/Blade Cartridges

REF	DESCRIPTION	ORDERING NUMBER	ITEM CODE	WT. LBS.
12	Y-Type HD Carbide Blade (single)	YT-HDC	79728	1.9
13	36" (900mm) Y-Type HD Carbide Blade Cartridge	YCART-36/900-HDTC	79829	38.5
	42" (1050mm) Y-Type HD Carbide Blade Cartridge	YCART-42/1050-HDTC	79830	44.6
	48" (1200mm) Y-Type HD Carbide Blade Cartridge	YCART-48/1200-HDTC	79831	50.7
	54" (1350mm) Y-Type HD Carbide Blade Cartridge	YCART-54/1350-HDTC	79832	56.8
	60" (1500mm) Y-Type HD Carbide Blade Cartridge	YCART-60/1500-HDTC	79833	63.0
	72" (1800mm) Y-Type HD Carbide Blade Cartridge	YCART-72/1800-HDTC	79834	75.2
14	Y-Type HD Purple Polyurethane Blade (single)	YT-HDP	79677	1.7
15	36" (900mm) Y-Type HD Purple Blade Cartridge	YCART-36/900-HDP	79817	36.6
	42" (1050mm) Y-Type HD Purple Blade Cartridge	YCART-42/1050-HDP	79818	42.4
	48" (1200mm) Y-Type HD Purple Blade Cartridge	YCART-48/1200-HDP	79819	48.2
	54" (1350mm) Y-Type HD Purple Blade Cartridge	YCART-54/1350-HDP	79820	54.0
	60" (1500mm) Y-Type HD Purple Blade Cartridge	YCART-60/1500-HDP	79821	59.8
	72" (1800mm) Y-Type HD Purple Blade Cartridge	YCART-72/1800-HDP	79822	71.4
16	Y-Type HD White Polyurethane Blade (single)	YT-HDW	79676	1.7
17	36" (900mm) Y-Type HD White Blade Cartridge	YCART-36/900-HDW	79823	36.6
	42" (1050mm) Y-Type HD White Blade Cartridge	YCART-42/1050-HDW	79824	42.4
	48" (1200mm) Y-Type HD White Blade Cartridge	YCART-48/1200-HDW	79825	48.2
	54" (1350mm) Y-Type HD White Blade Cartridge	YCART-54/1350-HDW	79826	54.0
	60" (1500mm) Y-Type HD White Blade Cartridge	YCART-60/1500-HDW	79827	59.8
	72" (1800mm) Y-Type HD White Blade Cartridge	YCART-72/1800-HDW	79828	71.4
18	Y-Type HD Red Polyurethane Blade (single)	YT-HDR	91822	1.7
19	36" (900mm) Y-Type HD Red Blade Cartridge	YCART-36/900-HDR	91823	36.6
	42" (1050mm) Y-Type HD Red Blade Cartridge	YCART-42/1050-HDR	91824	42.4
	48" (1200mm) Y-Type HD Red Blade Cartridge	YCART-48/1200-HDR	91825	48.2
	54" (1350mm) Y-Type HD Red Blade Cartridge	YCART-54/1350-HDR	91826	54.0
	60" (1500mm) Y-Type HD Red Blade Cartridge	YCART-60/1500-HDR	91827	59.8
	72" (1800mm) Y-Type HD Red Blade Cartridge	YCART-72/1800-HDR	91828	71.4

Lead time: 1 working day

Spring Tensioner Selection Chart

Cleaner Blade Width	79840 YSTHD-S	79842 YSTHD-BK	79839 YSTHD-GR	79841 YSTHD-BL	91833 YSTHD-GR-R	91834 YSTHD-BL-R
Carbide 36"–54" (900–1350mm)	X					
Carbide 60"–72" (1500–1800mm)		X				
Polyurethane 36"–48" (900–1200mm)			X			
Polyurethane 54"–72" (1350–1800mm)				X		
UHT 36"–48" (900–1200mm)					X	
UHT 54"–72" (1350–1800mm)						X

Product Ordering Information

P-Type® Secondary with C-Tips*

BELT WIDTH		ORDERING NUMBER	ITEM CODE	WT. LBS.
in.	mm			
18	450	PC18	74566	72.4
24	600	PC24	74567	79.3
30	750	PC30	74568	85.2
36	900	PC36	74569	92.1
42	1050	PC42	74570	105.0
48	1200	PC48	74571	111.8
54	1350	PC54	74572	122.2
60	1500	PC60	74573	128.1
72	1800	PC72	74574	139.9

*NOTE: C-Tips can be used on mechanically spliced and vulcanized belts.
Lead time: 1 working day

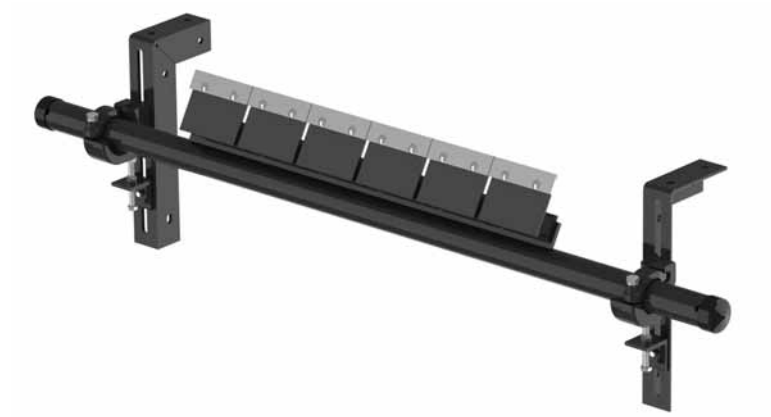

P-Type® Secondary with V-Tips*

BELT WIDTH		ORDERING NUMBER	ITEM CODE	WT. LBS.
in.	mm			
18	450	PV-18	78453	72.4
24	600	PV-24	78415	79.3
30	750	PV-30	78417	85.2
36	900	PV-36	78419	92.1
42	1050	PV-42	78421	105.0
48	1200	PV-48	78423	111.8
54	1350	PV-54	78454	122.2
60	1500	PV-60	78455	128.1
72	1800	PV72	73438	139.9

*NOTE: V-Tips can be used ONLY on vulcanized belts.
Lead time: 1 working day

Replacement Tips

ORDERING NUMBER	ITEM CODE	WT. LBS.
ICT6	74535	0.7
PSA150	73156	1.0

Lead time: 1 working day

Tips Required per Cleaner Size

in.	18	24	30	36	42	48	54	60	72
mm	450	600	750	900	1050	1200	1350	1500	1800
C-Tips or V-Tips Required	3	4	5	6	7	8	9	10	12

Product Notes:

- C-Tip: specially formulated tungsten carbide blades to work with mechanical fasteners.
- V-Tip: for use on vulcanized belts only.
- Compact design: fits in small transfer areas and tight chutes.
- Tips set at a non-aggressive 70º angle to give quick relief for passing mechanical splices.

Product Ordering Information

P-Type® LS
Limited Space Secondary Cleaner

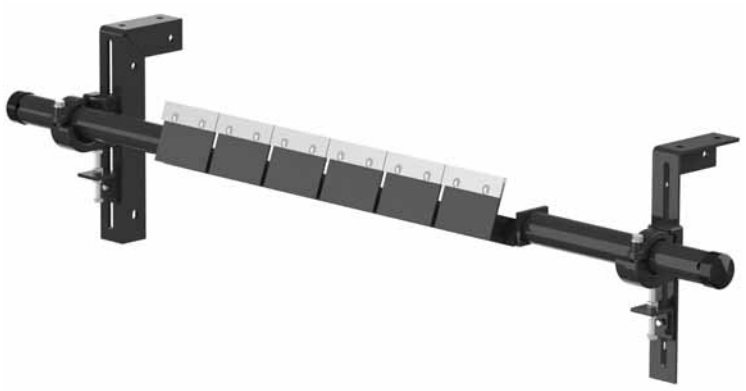

P-Type® LS Belt Cleaner with C-Tips*

BELT WIDTH		ORDERING NUMBER	ITEM CODE	WT. LBS.
in.	mm			
18	450	PLSC18	75588	73.4
24	600	PLSC24	75589	80.3
30	750	PLSC30	75590	86.2
36	900	PLSC36	75591	93.1
42	1050	PLSC42	75592	100.0
48	1200	PLSC48	75593	106.9
54	1350	PLSC54	75594	113.8

*NOTE: C-Tips can be used on mechanically spliced and vulcanized belts.
Lead time: 1 working day

Replacement C-Tips

ORDERING NUMBER	ITEM CODE	WT. LBS.
ICT6	74535	0.7

Lead time: 1 working day

Tips Required per Cleaner Size

in.	18	24	30	36	42	48	54
mm	450	600	750	900	1050	1200	1350
C-Tips Required	3	4	5	6	7	8	9

Product Notes:

- LS = Limited Space. Requires only 5 1/2" (138mm) of vertical clearance for installation.
- Not available in belt widths larger than 54" (1350mm).

Specifications & Guidelines

Pole Length Specifications

CLEANER SIZE		POLE LENGTH		MAXIMUM CONVEYOR SPAN	
in.	mm	in.	mm	in.	mm
18	450	48	1200	43	1075
24	600	54	1350	49	1225
30	750	60	1500	55	1375
36	900	66	1650	61	1525
42	1050	72	1800	67	1675
48	1200	78	1950	73	1825
54	1350	88	2200	83	2075
60	1500	94	2350	89	2225
72	1800	106	2650	101	2525

Pole Diameter - 2-3/8" (60mm)

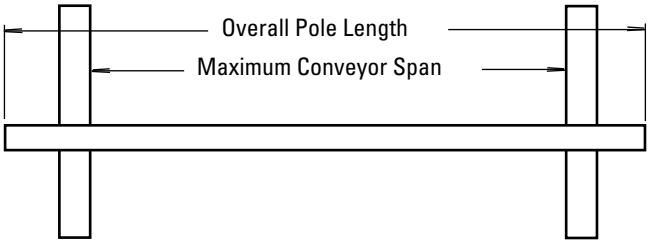

Clearance Guidelines for Installation

CLEANER TYPE	BELT WIDTH/ CLEANER SIZE		HORIZONTAL CLEARANCE REQUIRED		VERTICAL CLEARANCE REQUIRED	
	in.	mm	in.	mm	in.	mm
P-Type	18 – 72	450 – 1800	4	100	8	200
P-Type LS	18 – 54	450 – 1350	5	125	5 1/2	138

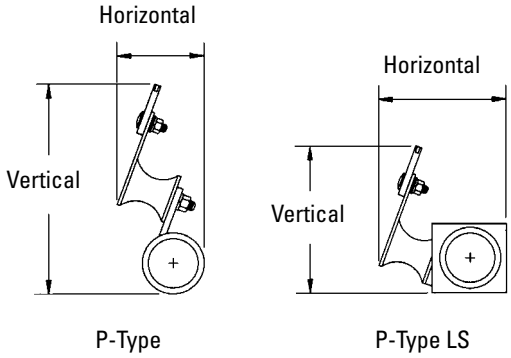

P-Type Cushion Specifications

CUSHION	DUROMETER	TEMPERATURE RANGE
Standard	55A	-30° to 180°F -35° to 82° C

Specifications:

- Maximum Belt Speed .....1000 FPM (5M/sec)
- Temperature Rating .....-30°F to 180°F (-35°C to 82°C)
- Usable Blade Wear Length.....3/8" (9mm)
- Blade Materials .....C-Tip: Impact Resistant Tungsten Carbide (works with mechanical fasteners)
  V-Tip: Long Life Tungsten Carbide (works on vulcanized belts only)
- Available for Belt Widths .....P-Type: 18" to 72" (450 to 1800mm)
  P-Type LS: 18" to 54" (450 to 1350mm)
  Other sizes available upon request.
- CEMA Cleaner Rating .....Class 3

Replacement Parts List

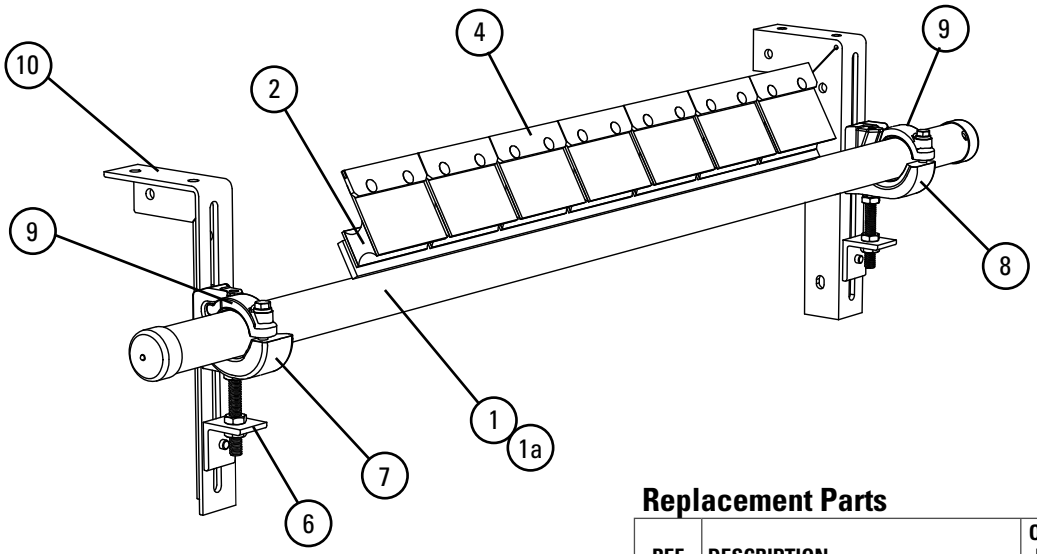

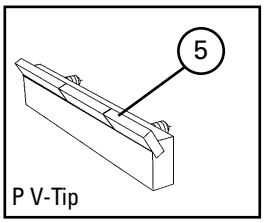

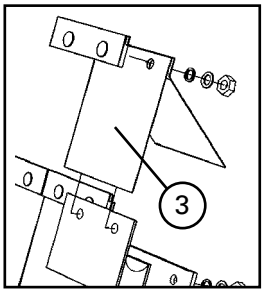

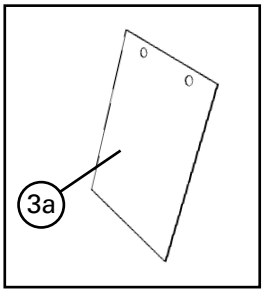

Replacement Parts

REF	DESCRIPTION	ORDERING NUMBER	ITEM CODE	WT. LBS.
1	18" (450mm) Pole	PP-18	78414	22.5
	24" (600mm) Pole	PP-24	78416	26.0
	30" (750mm) Pole	PP-30	78418	32.3
	36" (900mm) Pole	PP-36	78420	33.0
	42" (1050mm) Pole	PP-42	78422	43.0
	48" (1200mm) Pole	PP-48	78424	47.5
	54" (1350mm) Pole	PP-54	78425	55.0
	60" (1500mm) Pole	PP-60	78451	58.0
	72" (1800mm) Pole	PP72	73017	64.0
1a	18" (450mm) LS Pole	PLSP18	75595	32.3
	24" (600mm) LS Pole	PLSP24	75596	36.0
	30" (750mm) LS Pole	PLSP30	75597	38.7
	36" (900mm) LS Pole	PLSP36	75598	42.4
	42" (1050mm) LS Pole	PLSP42	75599	46.1
	48" (1200mm) LS Pole	PLSP48	75600	49.8
	54" (1350mm) LS Pole	PLSP54	75601	53.5
2	P2 C-Tip Cushion*	PHA	73626	2.0
3	P Polyshield	PPS6	73024	0.5
3a	P SS Shield	PSSS	74773	0.5
4	C-Tip* Kit (1 ea.)	ICT6	74535	0.7
5	P V-Tip* (for vulcanized belts only)	PSA150	73156	1.0
6	Adjusting Bracket Kit* (1 ea.)	PAB	75513	1.5
7	Pole Clamp Kit Left* (1 ea.) (incl. 1 item 9)	CCKL	79224	6.8
8	Pole Clamp Kit Right* (1 ea.) (incl. 1 item 9)	CCKR	79228	6.8
9	Cradle Clamp Top Strap (1 ea.) For use on left or right Pole Clamp Kit	CCKTS	79232	1.1
10	Mounting Bracket Kit (1 Right and 1 Left)	EZS2MBK	75666	13.0
-	Cradle Clamp Mounting Kit* (incl. 2 items 6 and 1 ea. item 8, 9 & 10)	CCMK	78919	33.0

*Hardware included
Lead time: 1 working day

Tips Required per Cleaner Size

in.	18	24	30	36	42	48	54	60	72
mm	450	600	750	900	1050	1200	1350	1500	1800
C-Tips or V-Tips Required	3	4	5	6	7	8	9	10	12

Product Ordering Information

R-Type® Reversing with C-Tips*

BELT WIDTH		ORDERING NUMBER	ITEM CODE	WT. LBS.
in.	mm			
18	450	RC18	74618	72.8
24	600	RC24	74619	79.3
30	750	RC30	74620	85.2
36	900	RC36	74621	91.9
42	1050	RC42	74622	104.9
48	1200	RC48	74623	113.5
54	1350	RC54	74624	121.1
60	1500	RC60	74625	129.8
72	1800	RC72	74626	141.1

*NOTE: C-Tips can be used on mechanically spliced and vulcanized belts.
Lead time: 1 working day

R-Type® Reversing with V-Tips*

BELT WIDTH		ORDERING NUMBER	ITEM CODE	WT. LBS.
in.	mm			
18	450	RV-18	78402	72.4
24	600	RV-24	78403	78.7
30	750	RV-30	78404	84.6
36	900	RV-36	78405	91.1
42	1050	RV-42	78406	104.0
48	1200	RV-48	78407	113.3
54	1350	RV-54	78408	119.9
60	1500	RV-60	78409	128.5
72	1800	RV-72	74641	139.7

*NOTE: V-Tips can be used ONLY on vulcanized belts.
Lead time: 1 working day

Replacement Tips

ORDERING NUMBER	ITEM CODE	WT. LBS.
ICT6	74535	0.7
RSA150	73628	1.3

Lead time: 1 working day

Tips Required per Cleaner Size

in.	18	24	30	36	42	48	54	60	72
mm	450	600	750	900	1050	1200	1350	1500	1800
C-Tips or V-Tips Required	3	4	5	6	7	8	9	10	12

Product Notes:

- Two-way cushions allow cleaning in both directions.
- Tungsten carbide tips for long wear and superior cleaning.

Specifications & Guidelines

Pole Length Specifications

CLEANER SIZE		POLE LENGTH		MAXIMUM CONVEYOR SPAN	
in.	mm	in.	mm	in.	mm
18	450	48	1200	43	1075
24	600	54	1350	49	1225
30	750	60	1500	55	1375
36	900	66	1650	61	1525
42	1050	72	1800	67	1675
48	1200	78	1950	73	1825
54	1350	88	2200	83	2075
60	1500	94	2350	89	2225
72	1800	106	2650	101	2525

Pole Diameter - 2-3/8" (60mm)

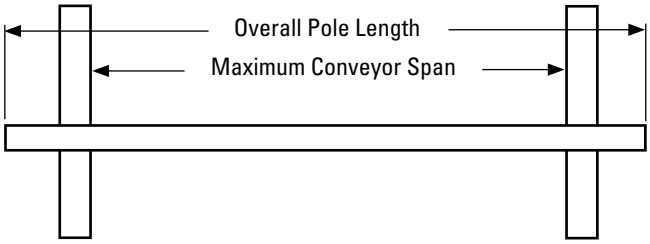

Clearance Guidelines For Installation

BELT WIDTH/ CLEANER SIZE		HORIZONTAL CLEARANCE REQUIRED		VERTICAL CLEARANCE REQUIRED	
in.	mm	in.	mm	in.	mm
18 - 72	450 - 1800	4	100	8	200

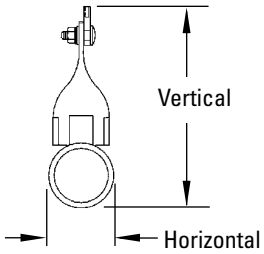

R-Type Cushion Specifications

CUSHION	DUROMETER	TEMPERATURE RANGE
Standard	55A	-30° to 180°F -35° to 82° C

Specifications:

- Maximum Belt Speed .....1000 FPM (5M/sec)
- Temperature Rating .....-30°F to 180°F (-35°C to 82°C)
- Usable Blade Wear Length.....3/8" (9mm)
- Blade Materials .....C-Tip: Impact Resistant Tungsten Carbide (works with mechanical fasteners)
  V-Tip: Long Life Tungsten Carbide (works on vulcanized belts only)
- Available for Belt Widths .....18" to 72" (450 to 1800mm)
  Other sizes available upon request
- CEMA Cleaner Rating .....Class 4

Replacement Parts List

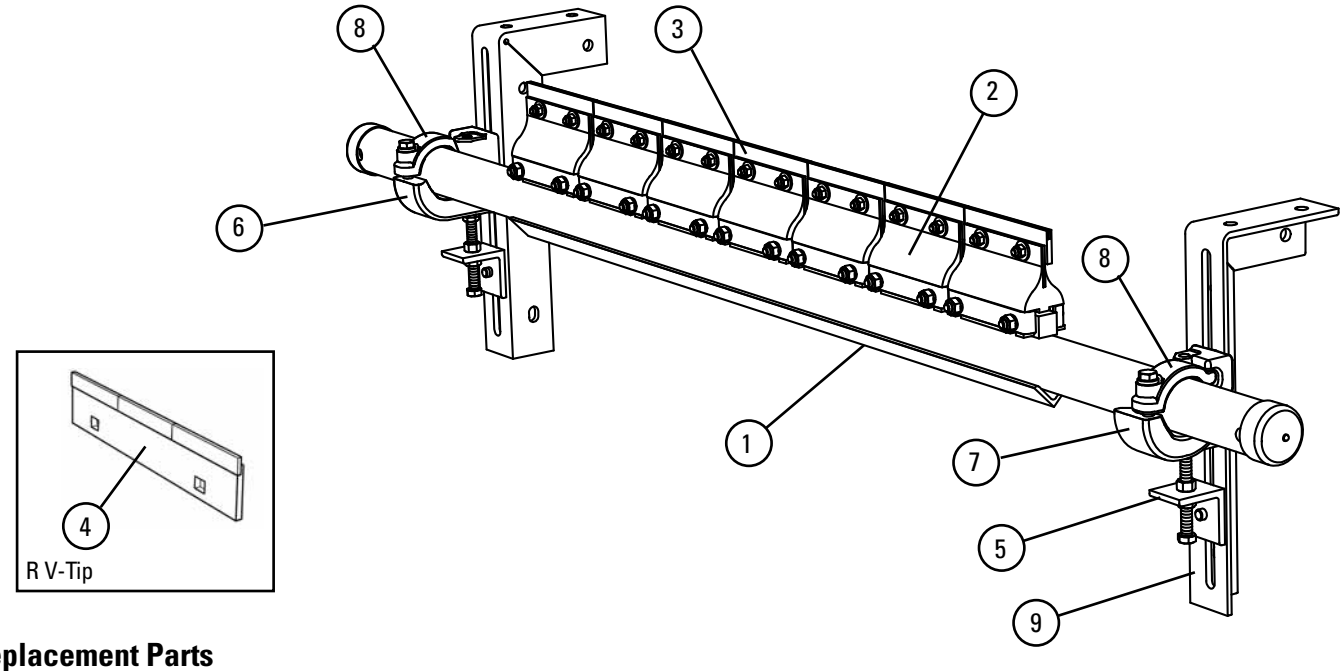

Replacement Parts

REF	DESCRIPTION	ORDERING NUMBER	ITEM CODE	WT. LBS.
1	18" (450mm) Pole	RP-18	78426	23.9
	24" (600mm) Pole	RP-24	78427	27.8
	30" (750mm) Pole	RP-30	78428	31.1
	36" (900mm) Pole	RP-36	78429	35.2
	42" (1050mm) Pole	RP-42	78430	45.6
	48" (1200mm) Pole	RP-48	78431	50.6
	54" (1350mm) Pole	RP-54	78432	56.6
	60" (1500mm) Pole	RP-60	78433	62.7
	72" (1800mm) Pole	RP-72	74612	71.4
2	R2 C-Tip Cushion*	RSA	76249	2.0
3	C-Tip Kit* (1 ea.)	ICT6	74535	0.7
4	R V-Tip* (for vulcanized belts only)	RSA150	73628	1.3
5	Adjusting Bracket Kit* (1 ea.)	PAB	75513	1.5
6	Pole Clamp Kit Left* (1 ea.) (incl. 1 item 8)	CCKL	79224	6.8
7	Pole Clamp Kit Right* (1 ea.) (incl. 1 item 8)	CCKR	79228	6.8
8	Pole Clamp Top Strap (1 ea.) For use on left or right Pole Clamp Kit	CCKTS	79232	1.1
9	Mounting Bracket Kit (1 Right and 1 Left)	EZS2MBK	75666	13.0
-	Cradle Clamp Mounting Kit* (incl. 2 ea. item 5 and 1 ea. item 6, 7 & 9)	CCMK	78919	33.0

*Hardware included
Lead time: 1 working day

Tips Required per Cleaner Size

in.	18	24	30	36	42	48	54	60	72
mm	450	600	750	900	1050	1200	1350	1500	1800
C-Tips or V-Tips Required	3	4	5	6	7	8	9	10	12

Product Ordering Information

FMS Secondary with C-Tips

BELT WIDTH		ORDERING NUMBER	ITEM CODE	WT. LBS.
in.	mm			
18	450	FMS-18	79637	98.7
24	600	FMS-24	79638	111.2
30	750	FMS-30	79639	123.6
36	900	FMS-36	79640	136.1
42	1050	FMS-42	79641	148.6
48	1200	FMS-48	79642	161.1
54	1350	FMS-54	79643	173.5
60	1500	FMS-60	79644	186.0
72	1800	FMS-72	79645	211.0

Lead time: 1 working day

FMS Secondary with V-Tips

BELT WIDTH		ORDERING NUMBER	ITEM CODE	WT. LBS.
in.	mm			
18	450	FMS-18V	79646	98.7
24	600	FMS-24V	79647	111.2
30	750	FMS-30V	79648	123.6
36	900	FMS-36V	79649	136.1
42	1050	FMS-42V	79650	148.6
48	1200	FMS-48V	79651	161.1
54	1350	FMS-54V	79652	173.5
60	1500	FMS-60V	79653	186.0
72	1800	FMS-72V	79654	211.0

*NOTE: V-Tips can be used ONLY on vulcanized belts.
Lead time: 1 working day

Replacement Tips

ORDERING NUMBER	ITEM CODE	WT. LBS.
ICT6	74535	0.7
RSA150	73628	1.3

Lead time: 1 working day

Optional MST Drop Brackets (2)

ORDERING NUMBER	ITEM CODE	WT. LBS.
MSTDB	79434	27.7

Lead time: 1 working day

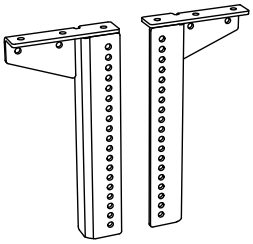

Tips Required Per Cleaner Size

in.	18	24	30	36	42	48	54	60	72
mm	450	600	750	900	1050	1200	1350	1500	1800
C-Tips or V-Tips Required	3	4	5	6	7	8	9	10	12

Product Notes:

- Recommended for medium-duty conveyor applications.
- Pole Length: Belt width plus 54" (1350mm). For longer requirements, see Mineline Installation Accessories – Pole Extender Kit (155).
- Cushion is designed to maintain continuous blade-to-belt contact and quick relief from passing mechanical splices.
- C-Tips are for mechanically fastened or vulcanized belts. V-Tips are for vulcanized belts only.
- Visual Blade Tension Check: Measure the tension spring and refer to Spring Length Chart for the correct length for best cleaning performance.
- Tensioner: MST Spring Tensioner for self-adjusting tensioning with easy retensioning adjustments.
- To make cleaner installation easier and quicker, see Optional Drop Brackets on 111.

Product Ordering Information

FMS Secondary with C-Tips

BELT WIDTH		ORDERING NUMBER	ITEM CODE	WT. LBS.
in.	mm			
18	450	FMS-18-SSTXD	92185	98.7
24	600	FMS-24-SSTXD	92186	111.2
30	750	FMS-30-SSTXD	92187	123.6
36	900	FMS-36-SSTXD	92188	136.1
42	1050	FMS-42-SSTXD	92189	148.6
48	1200	FMS-48-SSTXD	92190	161.1
54	1350	FMS-54-SSTXD	92191	173.5
60	1500	FMS-60-SSTXD	92192	186.0
72	1800	FMS-72-SSTXD	92193	211.0

Lead time: 1 working day

FMS Secondary with V-Tips

BELT WIDTH		ORDERING NUMBER	ITEM CODE	WT. LBS.
in.	mm			
18	450	FMS-18V-SSTXD	92194	98.7
24	600	FMS-24V-SSTXD	92195	111.2
30	750	FMS-30V-SSTXD	92196	123.6
36	900	FMS-36V-SSTXD	92197	136.1
42	1050	FMS-42V-SSTXD	92198	148.6
48	1200	FMS-48V-SSTXD	92199	161.1
54	1350	FMS-54V-SSTXD	92200	173.5
60	1500	FMS-60V-SSTXD	92201	186.0
72	1800	FMS-72V-SSTXD	92202	211.0

*NOTE: V-Tips can be used ONLY on vulcanized belts.
Lead time: 1 working day

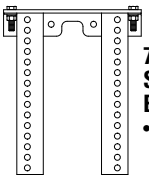

76071
Standard Mounting Bracket Kit
- For most secondary cleaner installs.

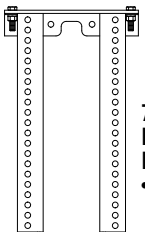

76072
Long Mounting Bracket Kit
- For installations that require extra length legs

Replacement Tips

ORDERING NUMBER	ITEM CODE	WT. LBS.
ICT6	74535	0.7
RSA150	73628	1.3

Lead time: 1 working day

Optional SST Drop Brackets (2)

ORDERING NUMBER	ITEM CODE	WT. LBS.
SSTSMB	76071	34.3
SSTLMB	76072	43.5

Lead time: 1 working day

in.	18	24	30	36	42	48	54	60	72
mm	450	600	750	900	1050	1200	1350	1500	1800
C-Tips or V-Tips Required	3	4	5	6	7	8	9	10	12

Product Notes:

- Recommended for medium-duty conveyor applications.
- Pole Length: Belt width plus 54" (1350mm). For longer requirements, see Mineline Installation Accessories – Pole Extender Kit (137).
- Cushion is designed to maintain continuous blade-to-belt contact and quick relief from passing mechanical splices.
- C-Tips are for mechanically fastened or vulcanized belts. V-Tips are for vulcanized belts only.
- Visual Blade Tension Check: Measure the tension spring and refer to Spring Length Chart for the correct length for best cleaning performance.
- To make cleaner installation easier and quicker, see Optional Drop Brackets on 99.

Specifications & Guidelines

Pole Length Specifications*

CLEANER SIZE		BLADE WIDTH		POLE LENGTH		MAXIMUM CONVEYOR SPAN	
in.	mm	in.	mm	in.	mm	in.	mm
18	450	18	450	72	1800	62	1550
24	600	24	600	78	1950	68	1700
30	750	30	750	84	2100	74	1850
36	900	36	900	90	2250	80	2000
42	1050	42	1050	96	2400	86	2150
48	1200	48	1200	102	2550	92	2300
54	1350	54	1350	108	2700	98	2450
60	1500	60	1500	114	2850	104	2600
72	1800	72	1800	126	3150	116	2900
84	2100	84	2100	138	3450	128	3200
96	2400	96	2400	150	3750	140	3500

*For special extra long pole length requirements a Pole Extender Kit (#76024) is available that provides 30" (750mm) of extended pole length. See Page 7.
Pole Diameter - 2-7/8" (73mm)

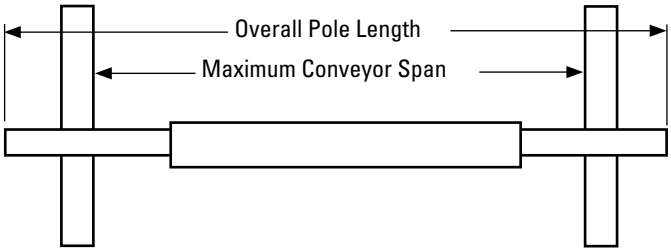

Clearance Guidelines for Installation

HORIZONTAL CLEARANCE REQUIRED		VERTICAL CLEARANCE REQUIRED	
in.	mm	in.	mm
3-1/2	89	10	245

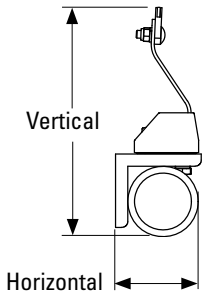

MST Tensioner Spring Length Chart

Blade Width		2 White Springs		2 Silver Springs		2 Black Springs	
in.	mm	in.	mm	in.	mm	in.	mm
18	450	2 7/8	73	3 1/2	89	3 1/2	89
24	600	2 5/8	67	3 3/8	86	3 1/2	89
30	750	2 3/8	60	3 1/4	83	3 3/8	86
36	900	2 1/8	54	3 1/8	79	3 1/4	83
42	1050	N/A	N/A	3	76	3 1/8	79
48	1200	N/A	N/A	2 7/8	73	3 1/8	79
54	1350	N/A	N/A	2 3/4	70	3	76
60	1500	N/A	N/A	2 3/4	70	2 7/8	73
72	1800	N/A	N/A	N/A	N/A	2 3/4	70

Shading indicates preferred spring option. Measure spring as shown.

SST XD Tensioner Spring Length Chart

Blade Width		White Spring		Silver Spring		Black Spring	
in.	mm	in.	mm	in.	mm	in.	mm
18	450	3 3/8	86	4	102	N/A	N/A
24	600	3 1/8	79	3 7/8	98	N/A	N/A
30	750	2 7/8	73	3 3/4	95	N/A	N/A
36	900	N/A	N/A	3 3/4	95	3 7/8	98
42	1050	N/A	N/A	3 5/8	92	3 3/4	95
48	1200	N/A	N/A	3 1/2	89	3 5/8	92
54	1350	N/A	N/A	3 3/8	86	3 5/8	92
60	1500	N/A	N/A	3 1/4	83	3 1/2	89
72	1800	N/A	N/A	N/A	N/A	3 3/8	86

Shading indicates preferred spring option. Measure spring as shown.

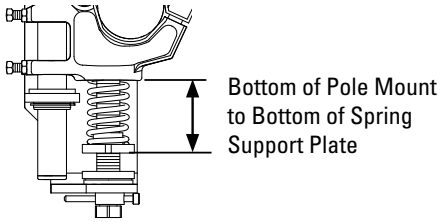

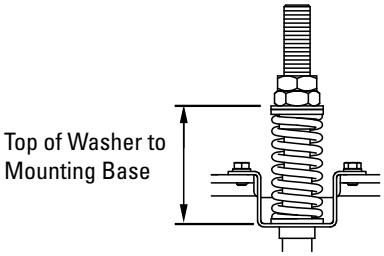

Specifications

- Maximum Belt Speed ..... 1000 FPM (5 m/s)
- Temperature Rating ..... -30F to 300F (-35C to 148C)
- Usable Blade Wear Length ..... 3/8" (9mm)
- Blade Materials ..... C-Tip: Impact Resistant Tungsten Carbide (works with mechanical fasteners)
  V-Tip: Long Life Tungsten Carbide (for vulcanized belts only)
- Available for Belt Widths ..... 8" to 72" (450 to 1800mm). Other sizes available upon request.
- CEMA Cleaner Rating ..... Class 4

Replacement Parts List

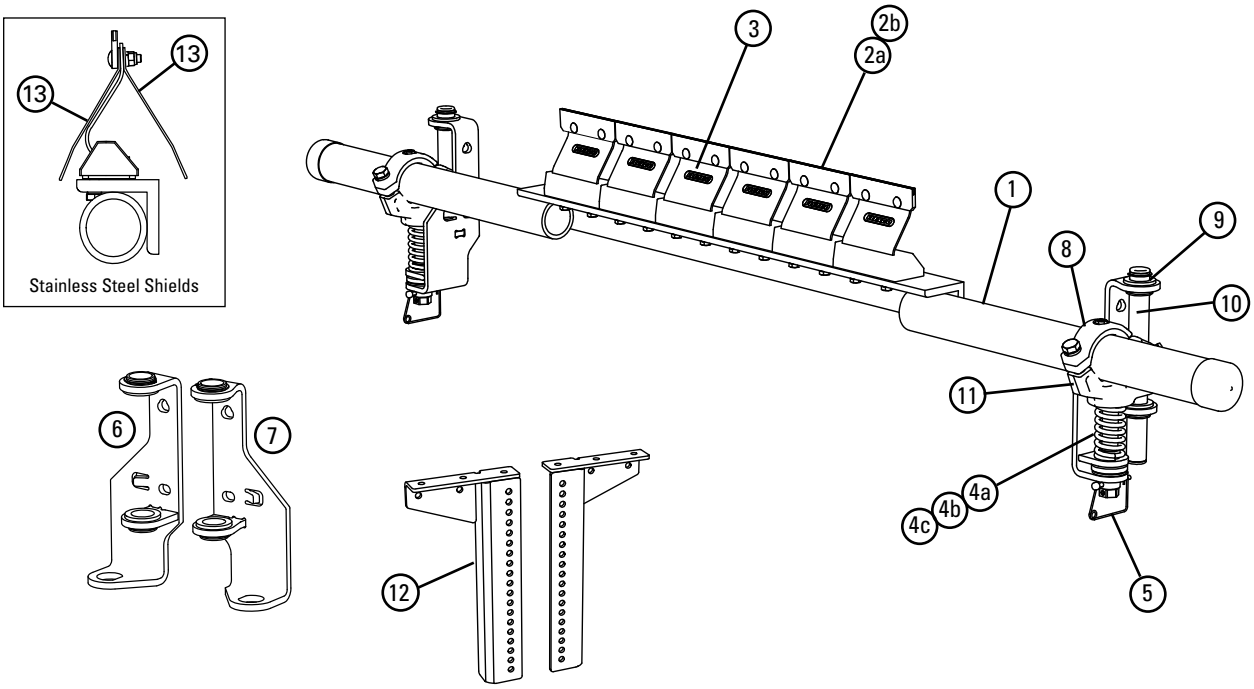

Replacement Parts

REF	DESCRIPTION	ORDERING NUMBER	ITEM CODE	WT. LBS.
1	18" (450mm) Pole	MHSP-18	76178	46.2
	24" (600mm) Pole	MHSP-24	75918	51.7
	30" (750mm) Pole	MHSP-30	75919	57.2
	36" (900mm) Pole	MHSP-36	75920	62.8
	42" (1050mm) Pole	MHSP-42	75921	68.3
	48" (1200mm) Pole	MHSP-48	75922	73.9
	54" (1350mm) Pole	MHSP-54	75923	79.4
	60" (1500mm) Pole	MHSP-60	75924	85.0
	72" (1800mm) Pole	MHSP-72	75925	96.1
2a	C-Tip*	ICT6	74535	0.7
2b	V-Tip* (for vulcanized belts only)	RSA150	73628	1.3
3	FMS Cushion Kit*	FMSC	79699	4.2
4a	Tension Spring - White (1 ea.) for belts 18" - 30" (450-750mm)	STS-W	75846	0.5
4b	Tension Spring - Silver (1 ea.) for belts 36" - 54" (900-1350mm)	STS-S	75843	0.8
4c	Tension Spring - Black (1 ea.) for belts 60" - 72" (1500-1800mm)	STS-B	75844	1.0
5	MST Adjusting Mechanism	MSTAM	79435	2.8
6	MST Mounting Bracket LH (incl. bushings)	MST-MBL	79436	5.7
7	MST Mounting Bracket RH (incl. bushings)	MST-MBR	79437	5.7
8	MST HD Clamp*	MSTCHD	79439	2.5
9	MST Bushing Kit (incl. 4 bushings)	MSTBK	79440	.2
10	MST Guide Pole	MSTGT	79441	1.5
11	MST HD Pole Mount*	MSTPMHD	79451	7.3
12	MST Drop Brackets (2)	MSTDB	79434	27.7
13	P SS Shield	PSSS	74773	.5
-	MST HD Tensioner w/White Spring* (incl. 1 ea. items 6, 7; 2 ea. items 4a, 5, 8, 10 & 11)	MSTHD-W	79431	36.8
-	MST HD Tensioner w/Silver Spring* (incl. 1 ea. items 6, 7; 2 ea. items 4b, 5, 8, 10 & 11)	MSTHD-S	79432	37.5
-	MST HD Tensioner w/Black Spring* (incl. 1 ea. items 6, 7; 2 ea. items 4c, 5, 8, 10 & 11)	MSTHD-B	79433	38.1

*Hardware Included
Lead time: 1 working day

MST Spring Tensioner Selection Chart

CLEANER SIZE	79431 MSTHD-W	79432 MSTHD-S	79433 MSTHD-B
FMS 18" - 30" (450 - 750mm)	X		
FMS 36" - 54" (900 - 1350mm)		X	
FMS 60" - 72" (1500 - 1800mm)			X

Replacement Parts List

FMS
Secondary Cleaner (SSTXD Tensioners)

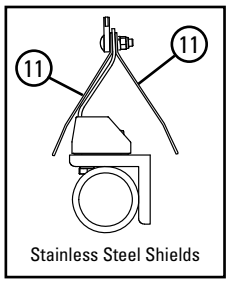

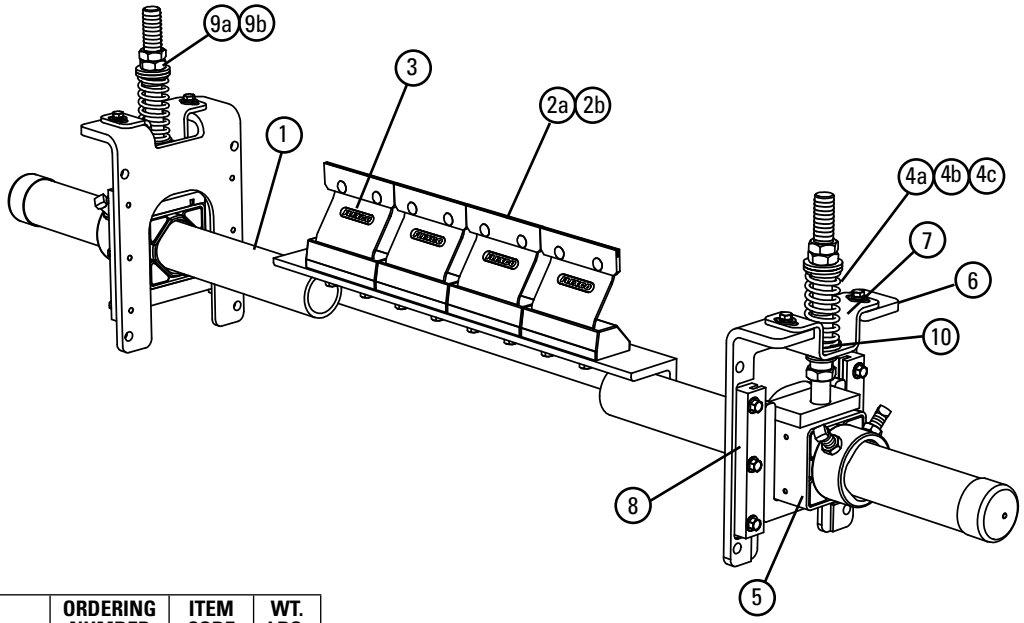

Replacement Parts

REF	DESCRIPTION	ORDERING NUMBER	ITEM CODE	WT. LBS.
1	18" (450mm) Pole	MHSP-18	76178	46.2
	24" (600mm) Pole	MHSP-24	75918	51.7
	30" (750mm) Pole	MHSP-30	75919	57.2
	36" (900mm) Pole	MHSP-36	75920	62.8
	42" (1050mm) Pole	MHSP-42	75921	68.3
	48" (1200mm) Pole	MHSP-48	75922	73.9
	54" (1350mm) Pole	MHSP-54	75923	79.4
	60" (1500mm) Pole	MHSP-60	75924	85.0
	72" (1800mm) Pole	MHSP-72	75925	96.1
2	C-Tip*	ICT6	74535	0.7
2a	V-Tip* (for vulcanized belts only)	RSA150	73628	1.3
3	FMS Cushion Kit*	FMSC	79699	4.2
4a	Tension Spring - White (1 ea.) for belts 18" - 30" (450-750mm)	STS-W	75846	0.5
4b	Tension Spring - Silver (1 ea.) for belts 36" - 48" (900-1200mm)	STS-S	75843	0.8
4c	Tension Spring - Black (1 ea.) for belts 54" - 84" (1350-2100mm	STS-B	75844	1.0
5	HD Torsion Pole Mount* (1 ea.) (includes HD adjusting rod, nuts & sleeve) (See 9 & 9a for bushings)	SSTHDPM	77868	15.0
6	SST XD Mounting Base Kit* (includes 1 mounting base, 2 slide guides, top hat bracket & bottom bushing)	SSTXDMK	91412	10.2
7	SST Hat Bracket (pair)	SSTHB	79582	3
8	Slide Guide Kit* (incl. 2 slide guides)	STGK2	77867	1.1
9a	SST Bushing Kit - White/Silver (includes 2 bushings)	SSTBK-W	76636	0.1
9b	SST Bushing Kit - Black (includes 2 bushings)	SSTBK-B	76637	0.1
10	SST Lower Bushing Kit (pair)	SSTLBK	79493	0.2
11	P Stainless Steel Shield	PSSS	74773	0.5
–	SST XD Spring Tensioner* - White (includes 2 each items 4a, 5, 6, & 9a) for belts 18" - 30" (450-750mm)	SSTXD-W	91408	60.6
–	SST XD Spring Tensioner* - Silver (includes 2 each items 4b, 5, 6, & 9a) for belts 36" - 48" (900-1200mm)	SSTXD-S	91409	61.4
–	SST XD Spring Tensioner* - Black (includes 2 each items 4c, 5, 6, & 9b) for belts 54" - 84" (1350-2100mm)	SSTXD-B	91410	62.0

*Hardware Included
Lead time: 1 working day

Spring Tensioner Selection Chart

CLEANER SIZE	91408 SSTXD-W	91409 SSTXD-S	91410 SSTXD-B
FMS 18" - 30" (450 - 750mm)	X		
FMS 36" - 48" (900 - 1200mm)		X	
FMS 54" - 72" (1350 - 1800mm)			X

Product Ordering Information

MHS
Heavy Duty Secondary Cleaner (Polyurethane Cushion Shields, SST Tensioners)

MHS HD Secondary with C-Tips

BELT WIDTH		ORDERING NUMBER	ITEM CODE	WT. LBS.
in.	mm			
24	600	MHS-24RU	79738	125.8
30	750	MHS-30RU	79739	131.0
36	900	MHS-36RU	79740	141.8
42	1050	MHS-42RU	79741	152.5
48	1200	MHS-48RU	79742	163.3
54	1350	MHS-54RU	79743	174.0
60	1500	MHS-60RU	79744	184.8
72	1800	MHS-72RU	79745	211.9
84	2100	MHS-84RU	79746	247.2
96	2400	MHS-96RU	79747	282.5

Lead time: 1 working day

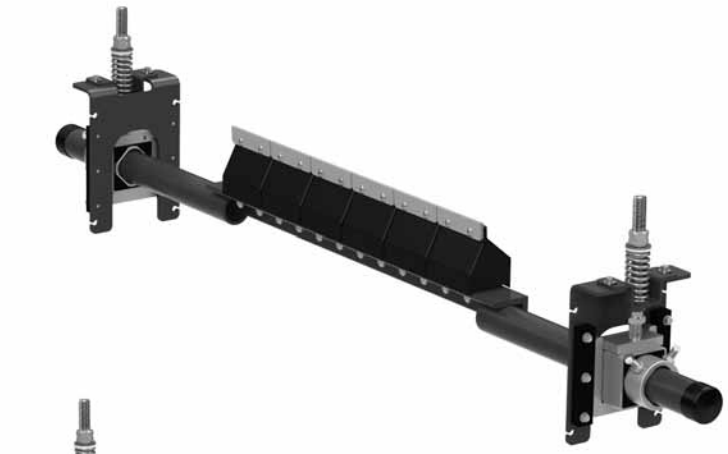

MHS HD Secondary with V-Tips*

BELT WIDTH		ORDERING NUMBER	ITEM CODE	WT. LBS.
in.	mm			
18	450	MHS-18RUV	79748	120.6
24	600	MHS-24RUV	79749	125.8
30	750	MHS-30RUV	79750	131.0
36	900	MHS-36RUV	79751	141.8
42	1050	MHS-42RUV	79752	152.5
48	1200	MHS-48RUV	79753	163.3
54	1350	MHS-54RUV	79754	174.0
60	1500	MHS-60RUV	79755	184.8
72	1800	MHS-72RUV	79756	211.9
84	2100	MHS-84RUV	79757	247.3
96	2400	MHS-96RUV	79758	282.7

*NOTE: V-Tips can be used ONLY on vulcanized belts.
Lead time: 1 working day

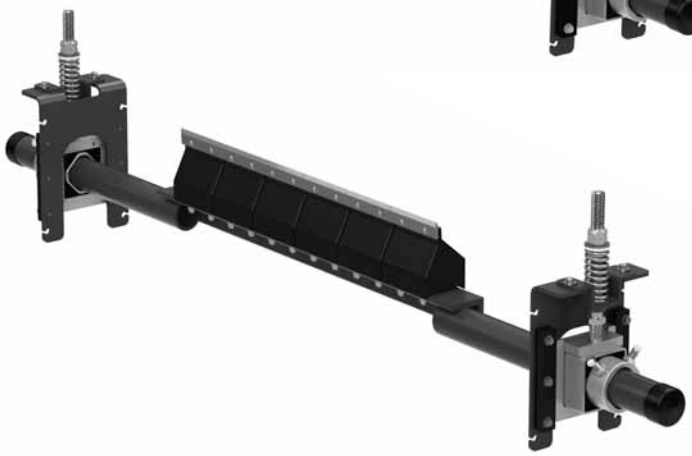

Replacement Tips

ORDERING NUMBER	ITEM CODE	WT. LBS.
ICT6	74535	0.7
RSA150	73628	1.3

Lead time: 1 working day

Replacement Cushion Shield

ORDERING NUMBER	ITEM CODE	WT. LBS.
UPFCC	79320	.3

Lead time: 1 working day

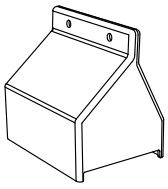

Polyurethane Cushion Shield

Tips Required Per Cleaner Size

in.	18	24	30	36	42	48	54	60	72	84	96
mm	450	600	750	900	1050	1200	1350	1500	1800	2100	2400
C-Tips or V-Tips Required	3	4	5	6	7	8	9	10	12	14	16

Product Notes:

- Heavy-duty design to deliver maximum cleaning efficiency on the most demanding, abusive beltlines.
- Pole Length: Belt width plus 54" (1350mm). For longer requirements, see Mineline Installation Accessories – Pole Extender Kit (155).
- Patented PowerFlex™ cushion design to maintain continuous blade-to-belt contact and quick relief from passing mechanical splices.
- C-Tips are for mechanically fastened or vulcanized belts. V-Tips are for vulcanized belts only.
- Visual Blade Tension Check: Measure the tension spring and refer to Spring Length Chart on mounting base for the correct length for best cleaning performance.
- Tensioner: SST Spring Tensioner for self-adjusting tensioning with easy retensioning adjustments.
- To make cleaner installation easier and quicker, see Optional Mounting Kits (155).

Product Ordering Information

MHS
Heavy Duty Secondary Cleaner (SST Tensioners)

MHS HD Secondary with C-Tips

BELT WIDTH		ORDERING NUMBER	ITEM CODE	WT. LBS.
in.	mm			
24	600	MHS-24	75910	124.6
30	750	MHS-30	75911	129.5
36	900	MHS-36	75912	140.0
42	1050	MHS-42	75913	150.4
48	1200	MHS-48	75914	160.9
54	1350	MHS-54	75915	171.3
60	1500	MHS-60	75916	181.8
72	1800	MHS-72	75917	208.3
84	2100	MHS-84	76803	243.0
96	2400	MHS-96	79043	277.7

Lead time: 1 working day

MHS HD Secondary with V-Tips*

BELT WIDTH		ORDERING NUMBER	ITEM CODE	WT. LBS.
in.	mm			
18	450	MHS-18V	76169	119.7
24	600	MHS-24V	76170	124.6
30	750	MHS-30V	76171	129.5
36	900	MHS-36V	76172	140.0
42	1050	MHS-42V	76173	150.4
48	1200	MHS-48V	76174	160.9
54	1350	MHS-54V	76175	171.3
60	1500	MHS-60V	76176	181.8
72	1800	MHS-72V	76177	208.3
84	2100	MHS-84V	76804	243.1
96	2400	MHS-96V	79044	277.9

*NOTE: V-Tips can be used ONLY on vulcanized belts.
Lead time: 1 working day

Replacement Tips

ORDERING NUMBER	ITEM CODE	WT. LBS.
ICT6	74535	0.7
RSA150	73628	1.3

Lead time: 1 working day

Optional Mounting Kits

DESCRIPTION	ORDERING NUMBER	ITEM CODE	WT. LBS.
Standard Mounting Bracket Kit *	SSTSMB	76071	34.3
Long Mounting Bracket Kit *	SSTLMB	76072	43.5
Optional Top Angle Kit *	SSTOTA	76073	10.5

*Hardware Included
Lead time: 1 working day

Tips Required Per Cleaner Size

in.	18	24	30	36	42	48	54	60	72	84	96
mm	450	600	750	900	1050	1200	1350	1500	1800	2100	2400
C-Tips or V-Tips Required	3	4	5	6	7	8	9	10	12	14	16

Product Notes:

- Heavy-duty design to deliver maximum cleaning efficiency on the most demanding, abusive beltlines.
- Pole Length: Belt width plus 54" (1350mm). For longer requirements, see Mineline Installation Accessories – Pole Extender Kit (155).
- Patented PowerFlex™ cushion design to maintain continuous blade-to-belt contact and quick relief from passing mechanical splices.
- C-Tips are for mechanically fastened or vulcanized belts. V-Tips are for vulcanized belts only.
- Visual Blade Tension Check: Measure the tension spring and refer to Spring Length Chart on mounting base for the correct length for best cleaning performance.
- Tensioner: SST Spring Tensioner for self-adjusting tensioning with easy retensioning adjustments.
- To make cleaner installation easier and quicker, see Optional Mounting Kits (155).

Product Ordering Information

MHS HD Secondary with V-Tips*

BELT WIDTH		ORDERING NUMBER	ITEM CODE	WT. LBS.
in.	mm			
18	450	MHS-18V-MST	79442	105.1
24	600	MHS-24V-MST	79443	115.1
30	750	MHS-30V-MST	79444	125.0
36	900	MHS-36V-MST	79445	135.5
42	1050	MHS-42V-MST	79446	145.4
48	1200	MHS-48V-MST	79447	155.3
54	1350	MHS-54V-MST	79448	169.4
60	1500	MHS-60V-MST	79449	180.4
72	1800	MHS-72V-MST	79450	201.1

*NOTE: V-Tips can be used ONLY on vulcanized belts.
Lead time: 1 working day

MHS HD Reversing with V-Tips*

BELT WIDTH		ORDERING NUMBER	ITEM CODE	WT. LBS.
in.	mm			
18	450	MHS-18RMV	79624	105.9
24	600	MHS-24RMV	79625	116.2
30	750	MHS-30RMV	79626	126.4
36	900	MHS-36RMV	79627	137.2
42	1050	MHS-42RMV	79628	147.4
48	1200	MHS-48RMV	79629	157.5
54	1350	MHS-54RMV	79630	171.9
60	1500	MHS-60RMV	79631	183.2
72	1800	MHS-72RMV	79632	204.5

*NOTE: V-Tips can be used ONLY on vulcanized belts.
Lead time: 1 working day

Replacement Tips

ORDERING NUMBER	ITEM CODE	WT. LBS.
RSA150	73628	1.3

Lead time: 1 working day

Optional MST Drop Brackets (2)

ORDERING NUMBER	ITEM CODE	WT. LBS.
MSTDB	79434	27.7

Lead time: 1 working day

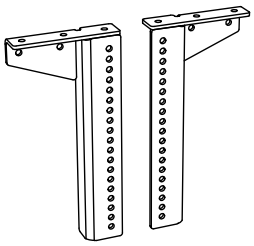

Tips Required Per Cleaner Size

in.	18	24	30	36	42	48	54	60	72
mm	450	600	750	900	1050	1200	1350	1500	1800
C-Tips or V-Tips Required	3	4	5	6	7	8	9	10	12

Product Notes:

- Heavy-duty design to deliver maximum cleaning efficiency on the most demanding, abusive beltlines.
- Pole Length: Belt width plus 54" (1350mm). For longer requirements, see Mineline Installation Accessories – Pole Extender Kit (155).
- Patented PowerFlex™ cushion design to maintain continuous blade-to-belt contact and quick relief from passing mechanical splices.
- V-Tips are for vulcanized belts only.
- Visual Blade Tension Check: Measure the tension spring and refer to Spring Length Chart on mounting base for the correct length for best cleaning performance.
- Tensioner: MST Spring Tensioner for self-adjusting tensioning with easy retensioning adjustments.
- To make cleaner installation easier and quicker, see Optional Mounting Kits (155).

Product Ordering Information

MHS HD Reversing Secondary with C-Tips

BELT WIDTH in.	BELT WIDTH mm	ORDERING NUMBER	ITEM CODE	WT. LBS.
24	600	MHS-24R	76613	128.2
30	750	MHS-30R	76614	134.0
36	900	MHS-36R	76615	145.4
42	1050	MHS-42R	76616	156.7
48	1200	MHS-48R	76617	168.1
54	1350	MHS-54R	76618	179.4
60	1500	MHS-60R	76619	190.8
72	1800	MHS-72R	76620	219.1
84	2100	MHS-84R	76621	247.4
96	2400	MHS-96R	79045	275.7

Lead time: 1 working day

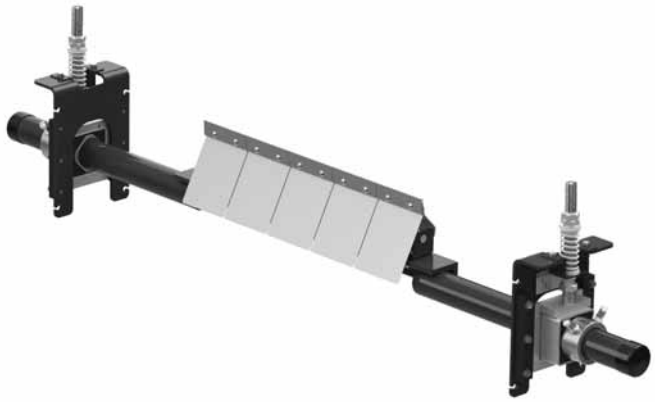

MHS HD Reversing Secondary with V-Tips*

BELT WIDTH in.	BELT WIDTH mm	ORDERING NUMBER	ITEM CODE	WT. LBS.
18	450	MHS-18RV	76646	122.4
24	600	MHS-24RV	76647	128.2
30	750	MHS-30RV	76648	134.0
36	900	MHS-36RV	76649	145.4
42	1050	MHS-42RV	76650	156.7
48	1200	MHS-48RV	76651	168.1
54	1350	MHS-54RV	76652	179.4
60	1500	MHS-60RV	76653	190.8
72	1800	MHS-72RV	76654	219.1
84	2100	MHS-84RV	76805	255.6
96	2400	MHS-96RV	79046	292.1

*NOTE: V-Tips can be used ONLY on vulcanized belts.
Lead time: 1 working day

Replacement Shields

DESCRIPTION	ORDERING NUMBER	ITEM CODE	WT. LBS.
P Stainless Steel Shield	PSSS	74773	0.5
PowerFlex™ Reverse Shield	PFRS	76622	0.4

Lead time: 1 working day

Replacement Tips

ORDERING NUMBER	ITEM CODE	WT. LBS.
ICT6	74535	0.7
RSA150	73628	1.3

Lead time: 1 working day

Product Notes:

- A cleaner for applications where the belt travels in both directions.

MHS HD with SAT2 Tensioner*

BELT WIDTH in.	BELT WIDTH mm	ORDERING NUMBER	ITEM CODE	WT. LBS.
24	600	MHS-24P	78736	102.4
30	750	MHS-30P	78737	107.3
36	900	MHS-36P	78738	116.4
42	1050	MHS-42P	78739	126.8
48	1200	MHS-48P	78740	137.3
54	1350	MHS-54P	78741	147.7
60	1500	MHS-60P**	78742	158.2
72	1800	MHS-72P**	78743	183.9
84	2100	MHS-84P**	78744	209.6
96	2400	MHS-96P**	79047	292.1

*Includes Control Box
**60"-96" models have a 3-piece pole.
Lead time: 1 working day

Product Notes:

- The SAT2 Tensioners automatically adjust the blades to the belt until the blades are worn out.
- Does not include air tank. Select option on 117.

Product Ordering Information

Air Tanks

ORDERING NUMBER	ITEM CODE	WT. LBS.
PAT1	78684	51.0
PAT2	78685	51.0

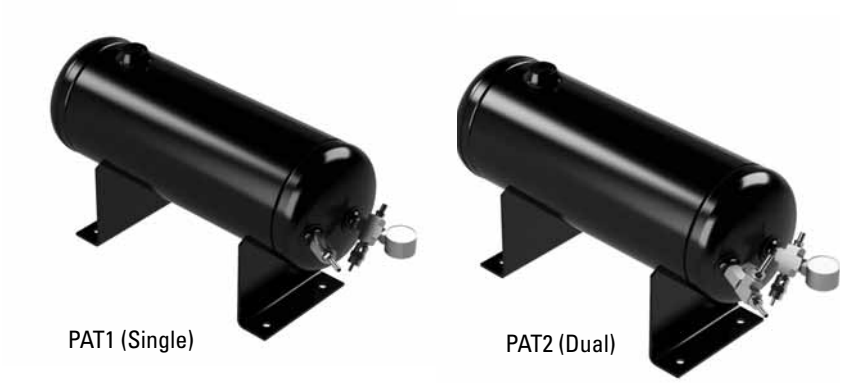

Replacement Parts List

REF	DESCRIPTION	ORDERING NUMBER	ITEM CODE	WT. LBS.
1	Tank Label Kit	PATLK	78791	0.1
2	Tank Hose Kit (incl. 1 ea. 10' hose and 1' poly spiral wrap, 2 hose clamps)	PATHK	78794	1.5

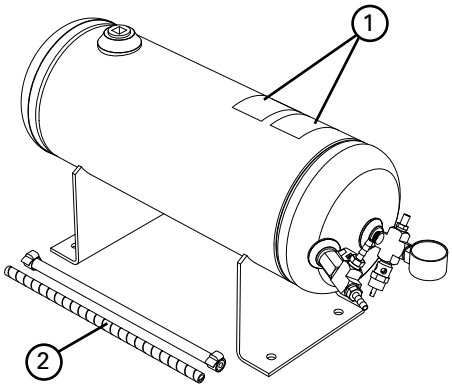

Product Notes:

- For use with PAT cleaner assemblies and PAT control box.
- Single for applications with one cleaner, double for applications with two cleaners.
- 150# pop-off valve for safe pressurizing/charging of Air Tank.
- ASME construction.

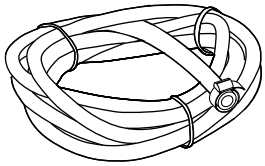

Air Line Connection for Site-Accessible Air

ORDERING NUMBER	ITEM CODE	WT. LBS.
PATHK*	78794	1.5

* incl. 10' hose, 1' poly spiral wrap, 2 hose clamps

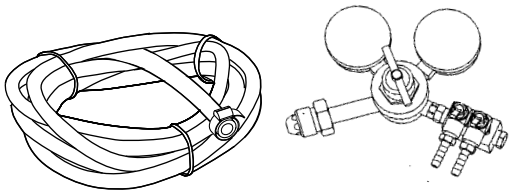

Nitrogen Tank Connection for Site-Provided Nitrogen Tank

ORDERING NUMBER	ITEM CODE	WT. LBS.
PANK*	78799	5.0

* incl. Nitrogen Regulator, 10' hose, 2 hose clamps

Product Ordering Information

Stainless Steel MHS
Heavy Duty Secondary Cleaner

SS MHS HD Secondary with C-Tips

BELT WIDTH		ORDERING NUMBER	ITEM CODE
in.	mm		
24	600	MHS-24-S/S	77601
30	750	MHS-30-S/S	77602
36	900	MHS-36-S/S	77603
42	1050	MHS-42-S/S	77604
48	1200	MHS-48-S/S	77605
54	1350	MHS-54-S/S	77606
60	1500	MHS-60-S/S	77607
72	1800	MHS-72-S/S	77608
84	2100	MHS-84-S/S	77609
96	2400	MHS-96-S/S	79048

Lead time: 3 weeks

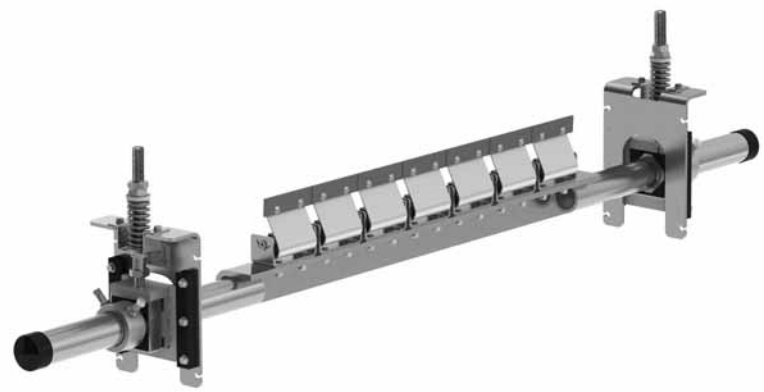

SS MHS HD Secondary with V-Tips*

BELT WIDTH		ORDERING NUMBER	ITEM CODE
in.	mm		
24	600	MHS-24V-S/S	77610
30	750	MHS-30V-S/S	77611
36	900	MHS-36V-S/S	77612
42	1050	MHS-42V-S/S	77613
48	1200	MHS-48V-S/S	77614
54	1350	MHS-54V-S/S	77615
60	1500	MHS-60V-S/S	77616
72	1800	MHS-72V-S/S	77617
84	2100	MHS-84V-S/S	77618
96	2400	MHS-96V-S/S	79049

*NOTE: V-Tips can be used ONLY on vulcanized belts.
Lead time: 3 weeks

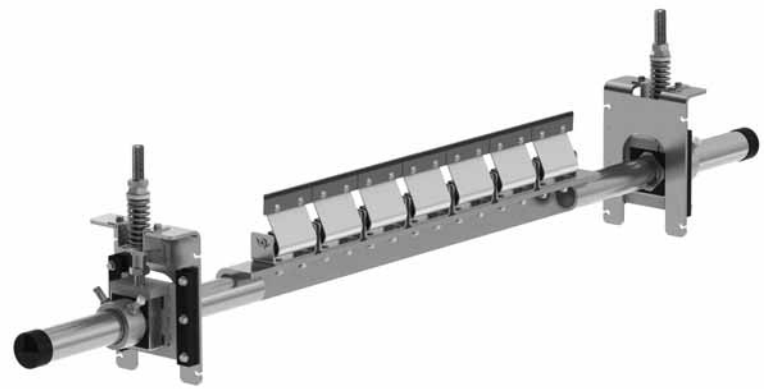

For replacement tips and qty of tips per cleaner, see 114

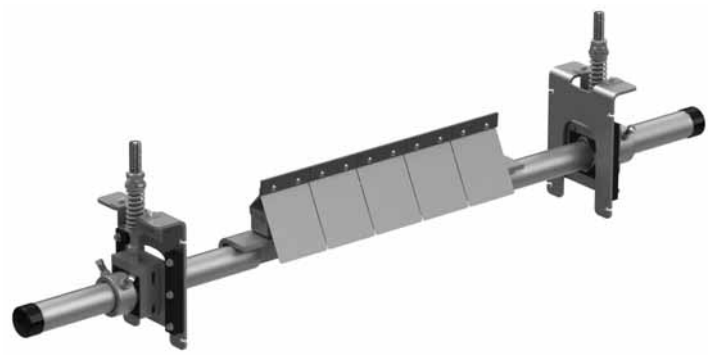

SS MHS HD Reversing Secondary with C-Tips

BELT WIDTH		ORDERING NUMBER	ITEM CODE
in.	mm		
24	600	MHS-24R-S/S	77640
30	750	MHS-30R-S/S	77641
36	900	MHS-36R-S/S	77642
42	1050	MHS-42R-S/S	77643
48	1200	MHS-48R-S/S	77644
54	1350	MHS-54R-S/S	77645
60	1500	MHS-60R-S/S	77646
72	1800	MHS-72R-S/S	77647
84	2100	MHS-84R-S/S	77648
96	2400	MHS-96R-S/S	79050

Lead time: 3 weeks

SS MHS HD Reversing Secondary with V-Tips*

BELT WIDTH		ORDERING NUMBER	ITEM CODE
in.	mm		
24	600	MHS-24RV-S/S	77649
30	750	MHS-30RV-S/S	77650
36	900	MHS-36RV-S/S	77651
42	1050	MHS-42RV-S/S	77652
48	1200	MHS-48RV-S/S	77653
54	1350	MHS-54RV-S/S	77654
60	1500	MHS-60RV-S/S	77655
72	1800	MHS-72RV-S/S	77656
84	2100	MHS-84RV-S/S	77657
96	2400	MHS-96RV-S/S	79051

*NOTE: V-Tips can be used ONLY on vulcanized belts.
Lead time: 3 weeks

Pole Length Specifications*

CLEANER SIZE		BLADE WIDTH		POLE LENGTH		MAXIMUM CONVEYOR SPAN	
in.	mm	in.	mm	in.	mm	in.	mm
18	450	18	450	72	1800	62	1550
24	600	24	600	78	1950	68	1700
30	750	30	750	84	2100	74	1850
36	900	36	900	90	2250	80	2000
42	1050	42	1050	96	2400	86	2150
48	1200	48	1200	102	2550	92	2300
54	1350	54	1350	108	2700	98	2450
60	1500	60	1500	114	2850	104	2600
72	1800	72	1800	126	3150	116	2900
84	2100	84	2100	138	3450	128	3200
96	2400	96	2400	150	3750	140	3500

*For special extra long pole length requirements a Pole Extender Kit (#76024) is available that provides 30" (750mm) of extended pole length. (Page 155).
Pole Diameter – 2-7/8" (73mm)

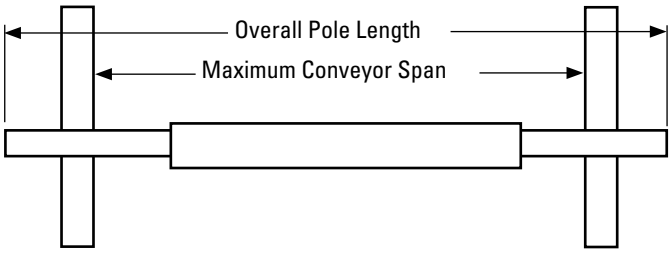

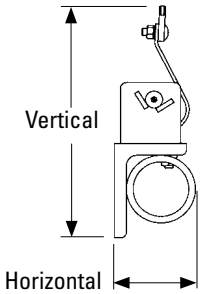

Clearance Guidelines for Installation

HORIZONTAL CLEARANCE REQUIRED		VERTICAL CLEARANCE REQUIRED	
in.	mm	in.	mm
4	100	10	245

SST Tensioner Spring Length Chart

Blade Width		White Spring		Silver Spring		Black Spring		Gold Spring	
in.	mm	in.	mm	in.	mm	in.	mm	in.	mm
18	450	3 3/8	86	4	102	N/A	N/A	N/A	N/A
24	600	3 1/8	79	3 7/8	98	N/A	N/A	N/A	N/A
30	750	2 7/8	73	3 3/4	95	N/A	N/A	N/A	N/A
36	900	N/A	N/A	3 3/4	95	3 7/8	98	N/A	N/A
42	1050	N/A	N/A	3 5/8	92	3 3/4	95	N/A	N/A
48	1200	N/A	N/A	3 1/2	89	3 5/8	92	N/A	N/A
54	1350	N/A	N/A	3 3/8	86	3 5/8	92	3 3/4	95
60	1500	N/A	N/A	3 1/4	83	3 1/2	89	3 3/4	95
72	1800	N/A	N/A	N/A	N/A	3 3/8	86	3 5/8	92
84	2100	N/A	N/A	N/A	N/A	3 1/8	79	3 1/2	89
96	2400	N/A	N/A	N/A	N/A	N/A	N/A	3 1/2	89
108	2700	N/A	N/A	N/A	N/A	N/A	N/A	3 3/8	86
120	3000	N/A	N/A	N/A	N/A	N/A	N/A	3 3/8	86

Shading indicates preferred spring option. Measure spring as shown below.

MST Tensioner Spring Length Chart

Blade Width		2 White Springs		2 Silver Springs		2 Black Springs	
in.	mm	in.	mm	in.	mm	in.	mm
18	450	2 7/8	73	3 3/8	86	3 1/2	89
24	600	2 5/8	67	3 3/8	86	3 3/8	86
30	750	2 3/8	60	3 1/4	83	3 3/8	86
36	900	2 1/8	54	3 1/8	79	3 1/4	83
42	1050	1 7/8	48	3	76	3 1/8	79
48	1200	N/A	N/A	2 7/8	73	3 1/8	79
54	1350	N/A	N/A	2 7/8	73	3	76
60	1500	N/A	N/A	2 3/4	70	2 7/8	73
72	1800	N/A	N/A	2 1/2	64	2 3/4	70

Shading indicates preferred spring option. Measure spring as shown below.

SAT2 Tensioner Pressure Chart

Blade Width		Blades	Pressure	
in.	mm		psi	kPa
18	450	3	15#	103
24	600	4	19#	131
30	750	5	23#	159
36	900	6	27#	186
42	1050	7	31#	214
48	1200	8	35#	241
54	1350	9	39#	269
60	1500	10	43#	296
72	1800	12	51#	352
84	2100	14	59#	407
96	2400	16	67#	462

SST

Top of Washer to Mounting Base

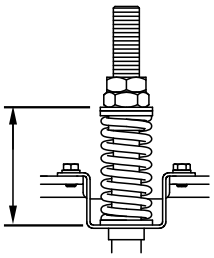

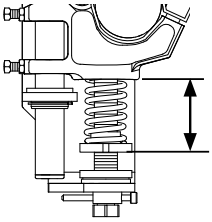

MST

Bottom of Pole Mount to Bottom of Spring Support Plate

Specifications

- Maximum Belt Speed ..... SST/SAT2 Tensioner - 1200 FPM (6M/sec)
- Maximum Belt Speed ..... MST Tensioner - 1000 FPM (5M/sec)
- Temperature Rating ..... -30°F to 180°F (-35°C to 82°C)
- Usable Blade Wear Length ..... 3/8" (9mm)
- Blade Materials ..... C-Tip: Impact Resistant Tungsten Carbide (works with mechanical fasteners)
  V-Tip: Long Life Tungsten Carbide (for vulcanized belts only)
- Available for Belt Widths ..... SST/SAT2 Tensioners – 18" to 96" (450 to 2400 mm). Other sizes available upon request.
- Available for Belt Widths ..... MST Tensioners – 18" to 72" (450 to 1800mm). Other sizes available upon request.
- CEMA Cleaner Rating ..... Class 5

Replacement Parts List

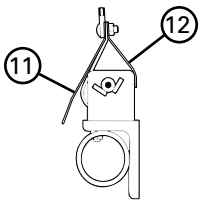

Stainless Steel Shields on Reversing MHS Cleaner

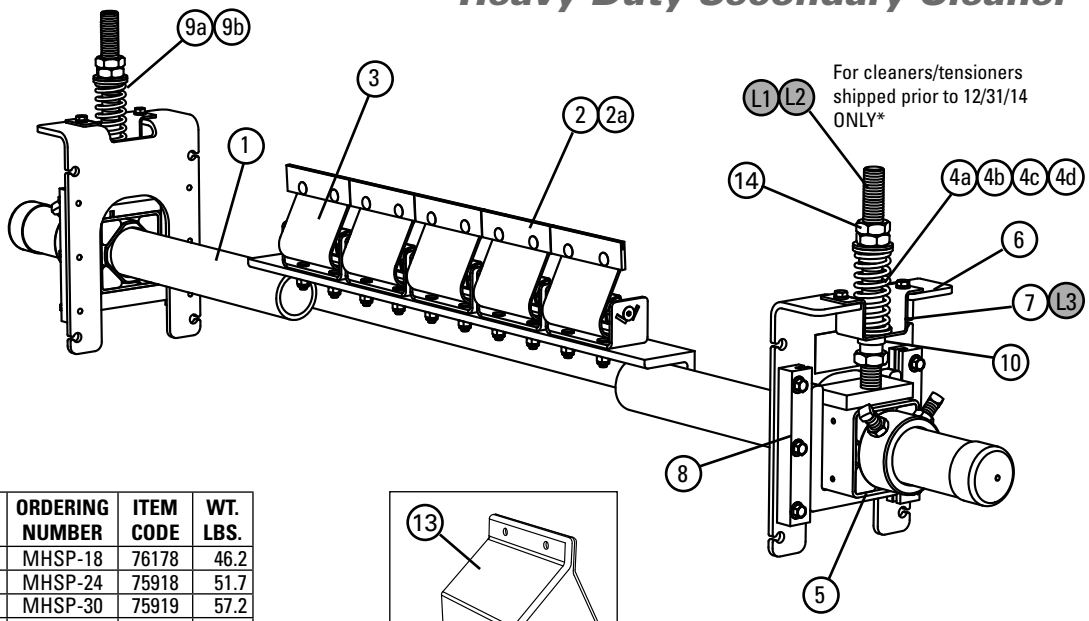

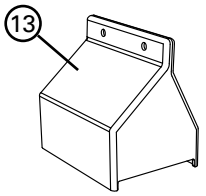

Polyurethane Cushion Shield

Replacement Parts

REF	DESCRIPTION	ORDERING NUMBER	ITEM CODE	WT. LBS.
1	18" (450mm) Pole	MHSP-18	76178	46.2
	24" (600mm) Pole	MHSP-24	75918	51.7
	30" (750mm) Pole	MHSP-30	75919	57.2
	36" (900mm) Pole	MHSP-36	75920	62.8
	42" (1050mm) Pole	MHSP-42	75921	68.3
	48" (1200mm) Pole	MHSP-48	75922	73.9
	54" (1350mm) Pole	MHSP-54	75923	79.4
	60" (1500mm) Pole	MHSP-60	75924	85.0
	72" (1800mm) Pole	MHSP-72	75925	96.1
	84" (2100mm) Pole	MHSP-84	76814	112.1
	96" (2400mm) Pole	MHSP-96	79052	128.1
2	C-Tip*	ICT6	74535	0.7
2a	V-Tip* (for vulcanized belts only)	RSA150	73628	1.3
3	PowerFlex™ Cushion* (complete)	PFC	75927	4.2
3a	PowerFlex Cushion* SS (complete)	PFC-SS	76560	4.2
4a	Tension Spring - White (1 ea.) for belts 18" - 30" (450-750mm)	STS-W	75846	0.5
4b	Tension Spring - Silver (1 ea.) for belts 36" - 48" (900-1200mm)	STS-S	75843	0.8
4c	Tension Spring - Black (1 ea.) for belts 54" - 84" (1350-2100mm)	STS-B	75844	1.0
4d	Tension Spring - Gold (1 ea.) for belts 96" (2400mm)	STS-G	78142	1.3
5	HD Torsion Pole Mount* (1 ea.) (includes HD adjusting rod, nuts & sleeve) (See 9 & 9a for bushings)	SSTHDPM	77868	15.0
6	HD Mounting Base Kit* (includes 1 mounting base, 2 slide guides, top hat bracket & bottom bushing)	SSTHDMK	77870	10.2
7	SST Hat Bracket (pair)	SSTHB	79582	3.5
8	Slide Guide Kit* (incl. 2 slide guides)	STGK2	77867	1.1
9a	SST Bushing Kit - White/Silver (includes 2 bushings)	SSTBK-W	76636	0.1
9b	SST Bushing Kit - Black/Gold (includes 2 bushings)	SSTBK-B	76637	0.1
10	SST Lower Bushing Kit (pair)	SSTLBK	79493	0.1
11	P Stainless Steel Shield	PSSS	74773	0.5
12	PowerFlex™ Reverse Shield	PFRS	76622	0.4
13	Polyurethane Cushion Shield	UPFCC	79320	0.3
14	Jam Nut Kit SST	JNK-C	79893	0.3

*Hardware Included
Lead time: 1 working day

Legacy Replacement Parts for Tensioners shipped prior to Dec. 31, 2014*

L1	Adjusting Rod Kit (includes 1 rod, 2 nuts, 1 bushing, 1 washer) for belts 24"-60" (600-1500mm)	STAK	75847	2.9
L2	HD Adjusting Rod Kit (includes 1 rod, 2 nuts, 1 HD bushing, 1 washer) for belts 72"-96" (1800-2400mm)	STAKHD	75892	3.0
L3	Legacy SST Hat Channel Kit	SSTHK	79070	1.5
L4	SAT2 Adjusting Rod Kit (2 ea.)	SAT2AK	78733	5.0
–	SST Tensioner Bushing Update Kit (includes 2 lower bushings, 2 sleeves, 2 nuts)	SST-BUK	76943	0.3

Replacement Parts

REF	DESCRIPTION	ORDERING NUMBER	ITEM CODE	WT. LBS.
–	HD Spring Tensioner* - White includes 2 each items 4a, 5, 6, & 9a) for belts 18" - 30" (450-750mm)	SST2HD-W	77879	60.6
–	HD Spring Tensioner* - Silver (includes 2 each items 4b, 5, 6, & 9a) for belts 36" - 48" (900-1200mm)	SST2HD-S	77880	61.4
–	HD Spring Tensioner* - Black (includes 2 each items 4c, 5, 6, & 9b) for belts 54" - 84" (1350-2100mm)	SST2HD-B	77881	62.0
–	HD Spring Tensioner* - Gold (includes 2 each items 4d, 5, 6, & 9b) for belts 96" (2400mm)	SST2HD-G	79041	62.6

Spring Tensioner Selection Chart

CLEANER SIZE	77879 SST2HD-W	77880 SST2HD-S	77881 SST2HD-B	79041 SST2HD-G
MHS 18" - 30" (450 - 750mm)	X			
MHS 36" - 48" (900 - 1200mm)		X		
MHS 54" - 84" (1350 - 2100mm)			X	
MHS 96" (2400mm)				X

*Verify if legacy parts are needed by looking at threaded rod. If it has standard threads, use legacy parts. If it has flat/acme threads, choose from regular replacement parts.

Standard thread profile

Acme/trapezoidal thread profile

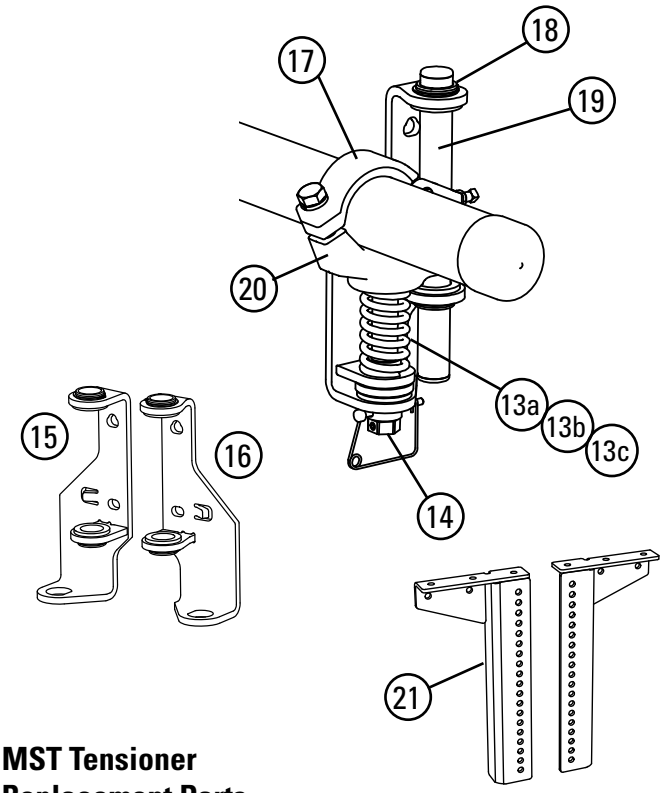

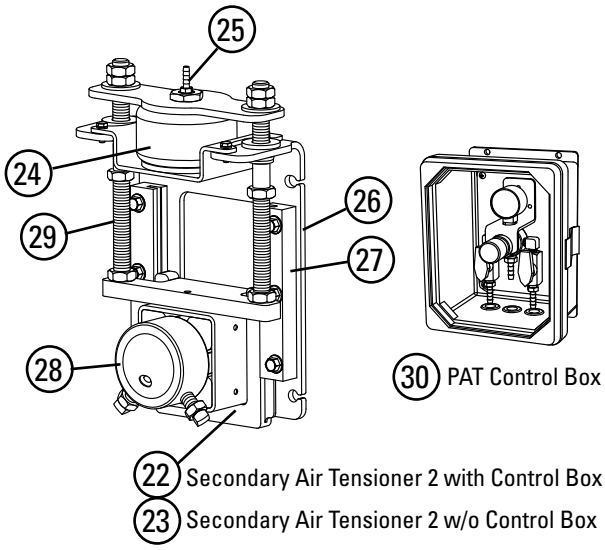

MST Tensioner Replacement Parts

REF	DESCRIPTION	ORDERING NUMBER	ITEM CODE	WT. LBS.
13a	Tension Spring - White (1 ea.) for belts 18" - 30" (450-750mm)	STS-W	75846	0.5
13b	Tension Spring - Silver (1 ea.) for belts 36" - 54" (900-1350mm)	STS-S	75843	0.8
13c	Tension Spring - Black (1 ea.) for belts 60" - 72" (1500-1800mm)	STS-B	75844	1.0
14	MST Adjusting Mechanism	MSTAM	79435	2.8
15	MST Mounting Bracket LH (incl. bushings)	MST-MBL	79436	5.7
16	MST Mounting Bracket RH (incl. bushings)	MST-MBR	79437	5.7
17	MST HD Clamp*	MSTCHD	79439	2.5
18	MST Bushing Kit (incl. 4 bushings)	MSTBK	79440	.2
19	MST Guide Pole	MSTGT	79441	1.5
20	MST HD Pole Mount*	MSTPMHD	79451	7.3
21	MST Drop Brackets (2)	MSTDB	79434	27.7
-	MST HD Tensioner w/White Spring* (incl. 1 ea. items 15,16,18; 2 ea. items 13a,14,17,19,20)	MSTHD-W	79431	36.8
-	MST HD Tensioner w/Silver Spring* (incl. 1 ea. items 15,16,18; 2 ea. items 13b,14,17,19,20)	MSTHD-S	79432	37.5
-	MST HD Tensioner w/Black Spring* (incl. 1 ea. items 15,16,18; 2 ea. items 13c,14,17,19,20)	MSTHD-B	79433	38.1

*Hardware included
Lead time: 1 working day

SAT2 (Secondary Air Tensioner 2) Replacement Parts

REF	DESCRIPTION	ORDERING NUMBER	ITEM CODE	WT. LBS.
22	SAT2 w/PAT Control Box	SAT2PAT	78735	43.5
23	SAT2 w/o Control Box	SAT2NCB	78703	41.0
24	SAT Air/Water Bag Kit (1 ea.)	SATB	76083	5.1
25	SAT 1/8" Hose Barb Kit (2 ea.)	SATHB	76084	0.1
26	SAT2 Mounting Base Kit (2 ea.)	SAT2MK	78704	11.6
27	ST Slide Guide Kit (1 ea.)	STGK2	77867	1.1
28	SAT2 Torsion Pole Mount (2 ea.) (incl. threaded rods and nuts)	SAT2PM	78732	11.1
29	SAT2 Adjusting Rod Kit	SAT2AK	78733	5.0
30	PAT Control Box 100psi	PACB100	79656	11.0

Lead time: 1 working day

MST Spring Tensioner Selection Chart

CLEANER SIZE	79431 MSTHD-W	79432 MSTHD-S	79433 MSTHD-B
MHS 18" - 30" (450 - 750mm)	X		
MHS 36" - 54" (900 - 1350mm)		X	
MHS 60" - 72" (1500 - 1800mm)			X

Replacement Parts List

Stainless Steel MHS
Heavy Duty Secondary Cleaner

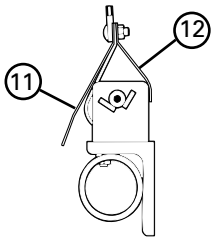

Stainless Steel Shields on Reversing MHS Cleaner

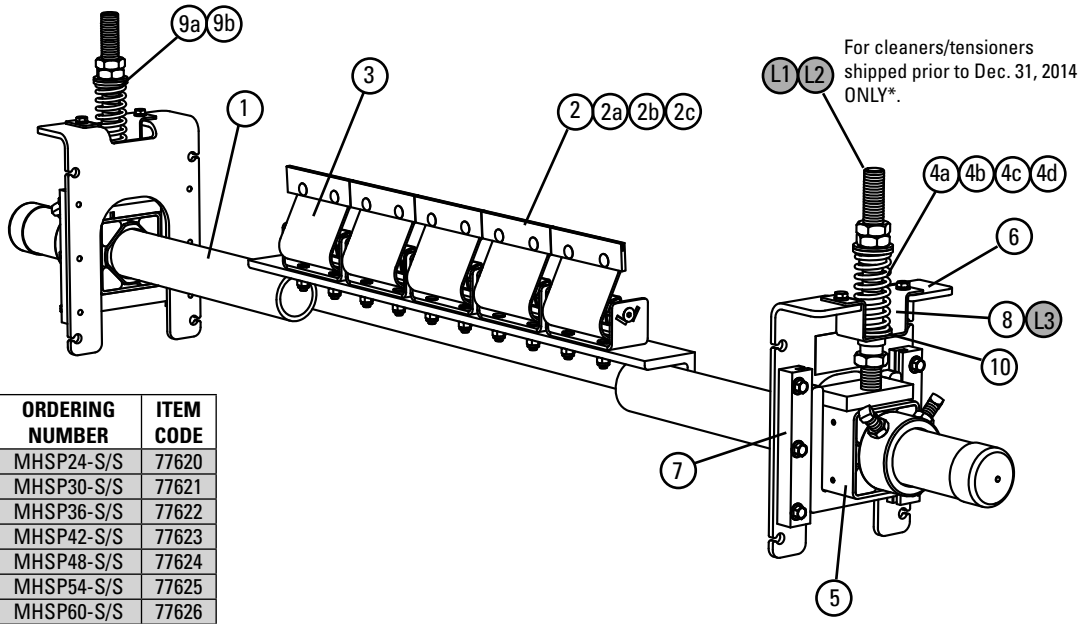

Replacement Parts

REF	DESCRIPTION	ORDERING NUMBER	ITEM CODE
1	24" (600mm) SS Pole	MHSP24-S/S	77620
	30" (750mm) SS Pole	MHSP30-S/S	77621
	36" (900mm) SS Pole	MHSP36-S/S	77622
	42" (1050mm) SS Pole	MHSP42-S/S	77623
	48" (1200mm) SS Pole	MHSP48-S/S	77624
	54" (1350mm) SS Pole	MHSP54-S/S	77625
	60" (1500mm) SS Pole	MHSP60-S/S	77626
	72" (1800mm) SS Pole	MHSP72-S/S	77627
	84" (2100mm) SS Pole	MHSP84-S/S	77628
	96" (2400mm) SS Pole	MHSP96-S/S	79053
2	C-Tip*	ICT6	74535
2a	SS C-Tip	ICT6-S/S	78700
2b	V-Tip* (for vulcanized belts only)	RSA150	73628
2c	S/S V-Tip* (for vulcanized belts only)	RVT6-S/S	76205
3	PowerFlex Cushion* (complete)	PFC-SS	76560
4a	Tension Spring - White (1 ea.) for belts 18" - 30" (450-750mm)	STS-W-S/S	77630
4b	Tension Spring - Silver (1 ea.) for belts 36" - 48" (900-1200mm)	STS-S-S/S	77631
4c	Tension Spring - Black (1 ea.) for belts 54" - 84" (1350-2100mm)	STS-B-S/S	77632
4d	Tension Spring - Gold (1 ea.) for belts 96" (2400)	STS-G-S/S	79057
5	SS HD Torsion Mounting Kit* (1 ea.) (includes adjusting rod, 3 nuts, & sleeve) (See 9 & 9a for bushings)	STHDPM2-S/S	77633
6	SS Mounting Base Kit* (includes 1 mounting base, 2 slide guides, top hat bracket & bottom bushing	STHDMK2-S/S	77634
7	SS Base Mounting Kit* (includes 2 slide guides)	STGK2-S/S	77635
8	SST Hat Bracket S/S (pair)	SSTHB-S/S	79586
9a	SST Bushing Kit - White/Silver (includes 2 bushings)	SSTBK-W	76636
9b	SST Bushing Kit - Black/Gold (includes 2 bushings)	SSTBK-B	76637
10	SST Lower Bushing Kit (pair)	SSTLBK	79493
11	P Stainless Steel Shield	PSSS	74773
12	PowerFlex™ Reverse Shield	PFRS	76622
–	SS Spring Tensioner* - White (includes 2 each items 4a, 5, 6 & 9a) for belts 18" - 30" (450-750mm)	SST2HD-W-S/S	77637
–	SS Spring Tensioner* - Silver (includes 2 each items 4b, 5, 6 & 9a) for belts 36" - 48" (900-1200mm)	SST2HD-S-S/S	77638
–	SS Spring Tensioner* - Black (includes 2 each items 4c, 5, 6 & 9b) for belts 54" - 84" (1350-2100mm)	SST2HD-B-S/S	77639
–	SS Spring Tensioner* - Gold (includes 2 each items 4d, 5, 6 & 9b) for belts 96" (2400mm)	SST2HD-G-S/S	79042

*Hardware Included
Lead time: 1 working day

Shaded items are made to order.
Lead time: 3 weeks

Legacy Replacement Parts for Tensioners shipped prior to Dec. 31, 2014*

REF	DESCRIPTION	ORDERING NUMBER	ITEM CODE
L1	Adjusting Rod Kit* (includes 1 rod, 2 nuts, 1 bushing, 1 washer) for belts 18" - 60" (450-1500mm)	STAK	75847
L2	HD Adjusting Rod Kit* (includes 1 rod, 2 nuts, 1 HD bushing, 1 washer) for belts 72" - 96" (1800-2400mm)	STAKHD	75892
L3	SST Hat Channel Kit S/S	SSTHK-S/S	79071
–	SS Bushing Update Kit (includes 2 ea. lower bushings, sleeves, nuts)	SST-BUK-S/S	77636

*Verify if legacy parts are needed by looking at threaded rod. If it has standard threads, use legacy parts. If it has flat/acme threads, choose from regular replacement parts.

Standard thread profile

Acme/trapezoidal thread profile

Spring Tensioner Selection Chart

CLEANER SIZE	77637 SSTHD-W-S/S	77638 SSTHD-S-S/S	77639 SSTHD-B-S/S	79042 SST2HD-G-S/S
MHS S/S 18" - 30" (450 - 750mm)	X			
MHS S/S 36" - 48" (900 - 1200mm)		X		
MHS S/S 54" - 84" (1350 - 2100mm)			X	
MHS S/S 96" (2400mm)				X

Product Ordering Information

P-Type ESAC Secondary with C-Tips

CLEANER COMPLETE				
BELT WIDTH		ORDERING NUMBER	ITEM CODE	WT. LBS.
in.	mm			
24	600	PC24-ESAC	77955	137.4
30	750	PC30-ESAC	77956	150.8
36	900	PC36-ESAC	77957	164.0
42	1050	PC42-ESAC	77958	177.3
48	1200	PC48-ESAC	77959	190.5
54	1350	PC54-ESAC	77960	203.9
60	1500	PC60-ESAC	77961	217.2
72	1800	PC72-ESAC	77962	243.8
60	1500	PC60-2ESAC	77963	303.7
72	1800	PC72-2ESAC	77964	330.8
84	2100	PC84-2ESAC	77965	358.2
96	2400	PC96-2ESAC	77966	385.2
120	3000	PC120-2ESAC	77967	443.8

Lead time: 1 working day

Shaded items are made to order.
Lead time: 15 working days

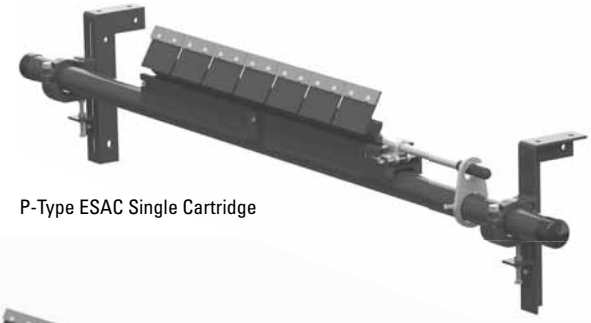

P-Type ESAC Single Cartridge

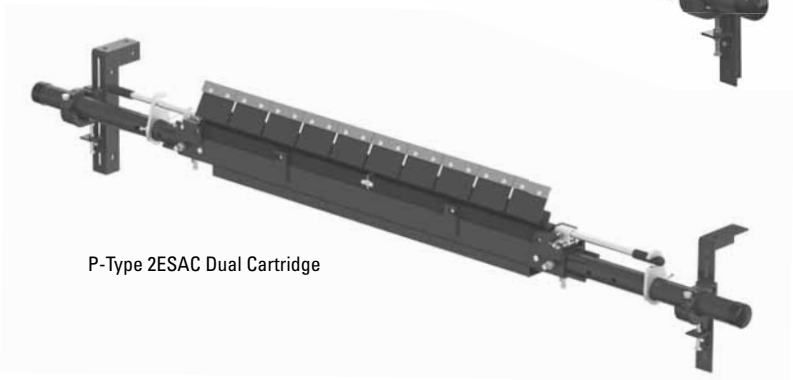

P-Type 2ESAC Dual Cartridge

P-Type ESAC Secondary with V-Tips*

CLEANER COMPLETE				
BELT WIDTH		ORDERING NUMBER	ITEM CODE	WT. LBS.
in.	mm			
24	600	PV24-ESAC	77981	137.4
30	750	PV30-ESAC	77982	150.8
36	900	PV36-ESAC	77983	164.0
42	1050	PV42-ESAC	77984	177.3
48	1200	PV48-ESAC	77985	190.5
54	1350	PV54-ESAC	77986	203.9
60	1500	PV60-ESAC	77987	217.2
72	1800	PV72-ESAC	77988	243.8
60	1500	PV60-2ESAC	77989	303.7
72	1800	PV72-2ESAC	77990	330.8
84	2100	PV84-2ESAC	77991	358.2
96	2400	PV96-2ESAC	77992	385.2
120	3000	PV120-2ESAC	77993	443.8

*NOTE: V-Tips can be used ONLY on vulcanized belts.
Lead time: 1 working day

Shaded items are made to order.
Lead time: 15 working days

Replacement Tips

ORDERING NUMBER	ITEM CODE	WT. LBS.
ICT6	74535	0.7
PSA150	73156	1.0

Lead time: 1 working day

Tips Required Per Cleaner Size

in.	24	30	36	42	48	54	60	72	84	96	120
mm	600	750	900	1050	1200	1350	1500	1800	2100	2400	3000
C-Tips or V-Tips Required	4	5	6	7	8	9	10	12	14	16	20

Product Notes:

- Patented Enhanced Service Advantage Cartridge™ allows for easy removal in even the dirtiest conditions.
- Pole Length: Belt width plus 54" (1350mm) (single cartridge cleaners); Belt width plus 60" (1500mm) (dual cartridge cleaners).
- Tips are set at a non-aggressive 70° angle to give quick relief for passing mechanical splices.
- C-Tips are for mechanically fastened or vulcanized belts. V-Tips are for vulcanized belts only.
- Tensioner mounting brackets included for fast and easy installation.
- Cartridge Removal Kit included for easy removal of the cartridge.

P-Type ESAC Cartridge Kits with C-Tips

BELT WIDTH		ORDERING NUMBER	ITEM CODE	WT. LBS.
in.	mm			
24	600	P-CARK-C24/600	78072	25.2
30	750	P-CARK-C30/750	78073	30.0
36	900	P-CARK-C36/900	78074	34.7
42	1050	P-CARK-C42/1050	78075	39.5
48	1200	P-CARK-C48/1200	78076	44.1
54	1350	P-CARK-C54/1350	78077	48.9
60	1500	P-CARK-C60/1500	78078	53.7
72	1800	P-CARK-C72/1800	78079	63.2
60	1500	P-CARK2-C60/1500	78088	87.5
72	1800	P-CARK2-C72/1800	78089	102.2
84	2100	P-CARK2-C84/2100	78090	117.3
96	2400	P-CARK2-C96/2400	78091	132.1
120	3000	P-CARK2-C120/3000	78092	162.3

Lead time: 1 working day

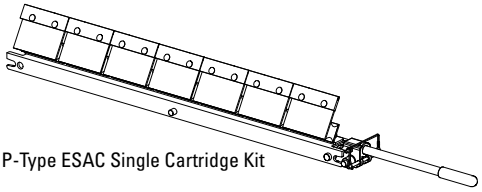

P-Type ESAC Single Cartridge Kit

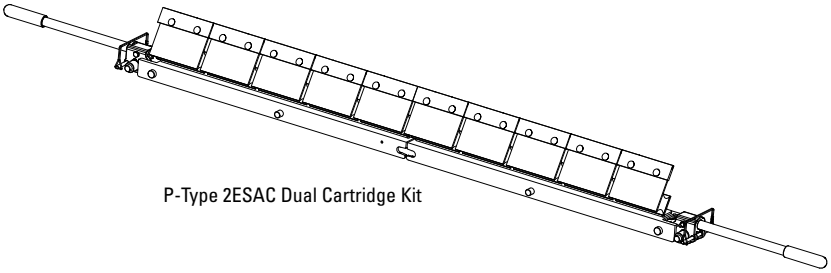

P-Type 2ESAC Dual Cartridge Kit

P-Type ESAC Cartridge Kits with V-Tips*

BELT WIDTH		ORDERING NUMBER	ITEM CODE	WT. LBS.
in.	mm			
24	600	P-CARK-V24/600	78080	25.2
30	750	P-CARK-V30/750	78081	30.0
36	900	P-CARK-V36/900	78082	34.7
42	1050	P-CARK-V42/1050	78083	39.5
48	1200	P-CARK-V48/1200	78084	44.1
54	1350	P-CARK-V54/1350	78085	48.9
60	1500	P-CARK-V60/1500	78086	53.7
72	1800	P-CARK-V72/1800	78087	63.2
60	1500	P-CARK2-V60/1500	78093	87.5
72	1800	P-CARK2-V72/1800	78094	102.2
84	2100	P-CARK2-V84/2100	78095	117.3
96	2400	P-CARK2-V96/2400	78096	132.1
120	3000	P-CARK2-V120/3000	78097	162.3

*NOTE: V-Tips can be used ONLY on vulcanized belts.
Lead time: 1 working day

Shaded items are made to order.
Lead time: 15 working days

Specifications & Guidelines

Pole Length Specifications*

VERSION	CLEANER SIZE		BLADE WIDTH		POLE LENGTH		MAXIMUM CONVEYOR SPAN	
	in.	mm	in.	mm	in.	mm	in.	mm
Single	24	600	24	600	78	1950	66	1650
	30	750	30	750	84	2100	72	1800
	36	900	36	900	90	2250	78	1950
	42	1050	42	1050	96	2400	84	2100
	48	1200	48	1200	102	2550	90	2250
	54	1350	54	1350	108	2700	96	2400
	60	1500	60	1500	114	2850	102	2550
	72	1800	72	1800	126	3150	114	2850
Dual	60	1500	60	1500	120	3000	108	2700
	72	1800	72	1800	132	3300	120	3000
	84	2100	84	2100	144	3600	132	3300
	96	2400	96	2400	156	3900	144	3600
	120	3000	120	3000	180	4500	168	4200

*For special extra long pole length requirements a Pole Extender Kit (#76024) is available that provides 30" (750mm) of extended pole length (155). Pole Diameter - 2-7/8" (73mm)

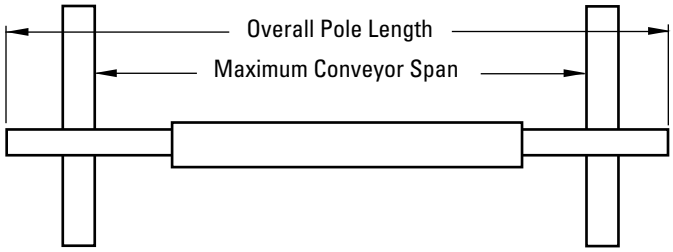

Clearance Guidelines for Installation

VERSION	HORIZONTAL CLEARANCE REQUIRED		VERTICAL CLEARANCE REQUIRED	
	in.	mm	in.	mm
Single	4-1/2	114	10-1/2	267
Dual	4-1/2	114	12-1/4	311

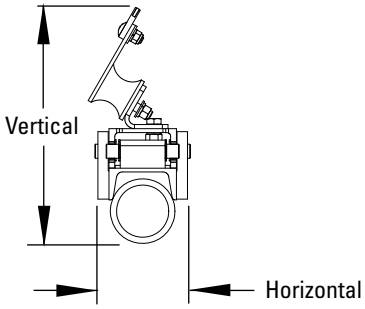

Aluminum Content

ALUMINUM ALLOY TYPE	PERCENT	
	Mg Magnesium	Ti Titanium
6061	1.0%	0.0%

Specifications:

- Maximum Belt Speed .....1000 FPM (5M/sec)
- Temperature Rating .....-30°F to 180°F (-35°C to 82°C)
- Usable Blade Wear Length.....3/8" (9mm)
- Blade Materials .....C-Tip: Impact Resistant Tungsten Carbide (works with mechanical fasteners)
  V-Tip: Long Life Tungsten Carbide (for vulcanized belts only)
- Available for Belt Widths .....24" to 120" (600 to 3000 mm). Other sizes available upon request.
- CEMA Cleaner Rating .....Class 4

Replacement Parts List

P-Type® ESAC
Secondary Cleaner
with Enhanced Service Advantage Cartridge

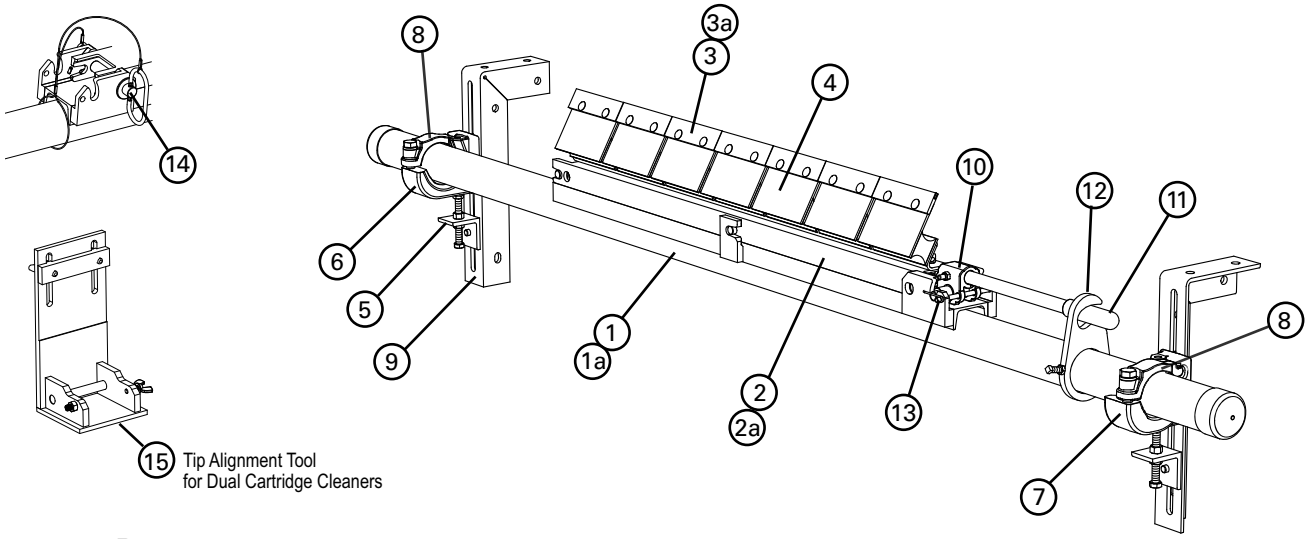

Replacement Parts

REF	DESCRIPTION	ORDERING NUMBER	ITEM CODE	WT. LBS.
1	ESAC Cartridge Pole 24"	SACPL-24/600	77887	65.4
	ESAC Cartridge Pole 30"	SACPL-30/750	77888	71.2
	ESAC Cartridge Pole 36"	SACPL-36/900	77889	77.1
	ESAC Cartridge Pole 42"	SACPL-42/1050	77890	82.9
	ESAC Cartridge Pole 48"	SACPL-48/1200	77891	88.8
	ESAC Cartridge Pole 54"	SACPL-54/1350	77892	94.6
	ESAC Cartridge Pole 60"	SACPL-60/1500	77893	100.5
	ESAC Cartridge Pole 72"	SACPL-72/1800	77894	112.2
	ESAC Cartridge Center Pole 60" (Dual)	SACPL2-60/1500	77895	77.3
	ESAC Cartridge Center Pole 72" (Dual)	SACPL2-72/1800	77896	89.5
	ESAC Cartridge Center Pole 84" (Dual)	SACPL2-84/2100	77897	101.8
	ESAC Cartridge Center Pole 96" (Dual)	SACPL2-96/2400	77898	114.1
	ESAC Cartridge Center Pole 120" (Dual)	SACPL2-120/3000	77899	142.3
1a	Extender Pole (for use with Dual Cartridge Center Pole)	MHP-EP	76392	54.0
2	ESAC Cartridge 24"	CART-24/600	77900	3.5
	ESAC Cartridge 30"	CART-30/750	77901	4.3
	ESAC Cartridge 36"	CART-36/900	77902	5.1
	ESAC Cartridge 42"	CART-42/1050	77903	5.9
	ESAC Cartridge 48"	CART-48/1200	77904	6.7
	ESAC Cartridge 54"	CART-54/1350	77905	7.4
	ESAC Cartridge 60"	CART-60/1500	77906	8.4
	ESAC Cartridge 72"	CART-72/1800	77907	10.0
	ESAC Cartridge 60" (Dual)	CART2-60/1500	77908	8.6
	ESAC Cartridge 72" (Dual)	CART2-72/1800	77909	10.2
	ESAC Cartridge 84" (Dual)	CART2-84/2100	77910	11.7
	ESAC Cartridge 96" (Dual)	CART2-96/2400	77911	13.3
	ESAC Cartridge 120" (Dual)	CART2-120/3000	77912	16.8
2a	ESAC Cartridge P-Type Adapter Plate 24"	PCAP-24/600	77913	4.7
	ESAC Cartridge P-Type Adapter Plate 30" §	PCAP-30/750	77914	6.1
	ESAC Cartridge P-Type Adapter Plate 36" §	PCAP-36/900	77915	7.2
	ESAC Cartridge P-Type Adapter Plate 42" §	PCAP-42/1050	77916	8.6
	ESAC Cartridge P-Type Adapter Plate 48" §	PCAP-48/1200	77917	9.8
	ESAC Cartridge P-Type Adapter Plate 54"	PCAP-54/1350	77918	11.1
	ESAC Cartridge P-Type Adapter Plate 60" §	PCAP-60/1500	77919	12.3
	ESAC Cartridge P-Type Adapter Plate 72"	PCAP-72/1800	77920	14.8

REF	DESCRIPTION	ORDERING NUMBER	ITEM CODE	WT. LBS.
3	C-Tip*	ICT6	74535	0.7
3a	P V-Tip* (for vulcanized belts only)	PSA150	73156	1.0
4	P2 C-Tip Cushion*	PHA	73626	2.0
5	Adjusting Bracket Kit* (1 ea.)	PAB	75513	1.5
6	HD Pole Clamp Kit Left* (1 ea.) (incl. item 8)	CCKHDL	79225	8.7
7	HD Pole Clamp Kit Right* (1 ea.) (incl. item 8)	CCKHDR	79229	8.7
8	HD Cradle Clamp Top Strap (1 ea.) for use with L or R HD Pole Clamp Kit	CCKHDTS	79233	1.7
9	Mounting Bracket Kit (1 Right and 1 Left)	EZS2MBK	75666	13.0
-	HD Cradle Clamp Mounting Kit* (incl. 2 items 5; 1 ea. items 6, 7 & 9)	CCMKHD	78920	36.7
10	ESAC Removal Knuckle	SACRKN	77882	3.2
11	ESAC Removal Handle	SACRH	77883	3.0
12	ESAC Handle Lock Plate	SACRHL	77884	1.7
13	Knuckle Retainer Pin	SACKRP	77885	0.2
14	SAC Hitch Pin	SACHP2	77768	0.9
-	ESAC Removal Kit (includes 1 ea. items 10-14)	SACRKT	77886	9.0
15	ESAC Cartridge Tip Alignment Tool (Dual)	SAC2-TIP-TL	77866	2.5

*Hardware Included
Lead Time: 1 working day

Shaded items are made to order.
Lead time: 15 working days

Product Ordering Information

R-Type ESAC Secondary with C-Tips

CLEANER COMPLETE				
BELT WIDTH		ORDERING NUMBER	ITEM CODE	WT. LBS.
in.	mm			
24	600	RC24-ESAC	77968	133.7
30	750	RC30-ESAC	77969	146.0
36	900	RC36-ESAC	77970	158.4
42	1050	RC42-ESAC	77971	170.7
48	1200	RC48-ESAC	77972	183.0
54	1350	RC54-ESAC	77973	195.3
60	1500	RC60-ESAC	77974	207.8
72	1800	RC72-ESAC	77975	232.4
60	1500	RC60-2ESAC	77976	237.0
72	1800	RC72-2ESAC	77977	259.4
84	2100	RC84-2ESAC	77978	281.8
96	2400	RC96-2ESAC	77979	304.2
120	3000	RC120-2ESAC	77980	354.0

Lead time: 1 working day

R-Type ESAC Single Cartridge

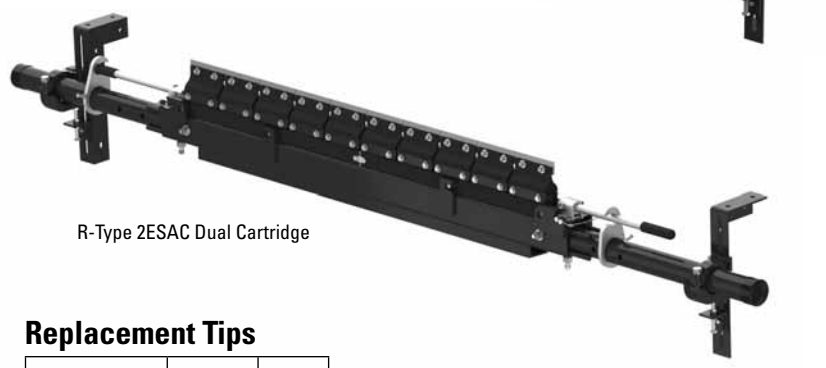

R-Type 2ESAC Dual Cartridge

R-Type ESAC Secondary with V-Tips*

CLEANER COMPLETE				
BELT WIDTH		ORDERING NUMBER	ITEM CODE	WT. LBS.
in.	mm			
24	600	RV24-ESAC	77994	133.7
30	750	RV30-ESAC	77995	146.0
36	900	RV36-ESAC	77996	158.4
42	1050	RV42-ESAC	77997	170.7
48	1200	RV48-ESAC	77998	183.0
54	1350	RV54-ESAC	77999	195.3
60	1500	RV60-ESAC	78000	207.8
72	1800	RV72-ESAC	78001	232.4
60	1500	RV60-2ESAC	78002	237.0
72	1800	RV72-2ESAC	78003	259.4
84	2100	RV84-2ESAC	78004	281.8
96	2400	RV96-2ESAC	78005	304.2
120	3000	RV120-2ESAC	78006	354.0

*NOTE: V-Tips can be used ONLY on vulcanized belts.
Lead time: 1 working day

Replacement Tips

ORDERING NUMBER	ITEM CODE	WT. LBS.
ICT6	74535	0.7
RSA150	73628	1.3

Lead time: 1 working day

Tips Required Per Cleaner Size

in.	24	30	36	42	48	54	60	72	84	96	120
mm	600	750	900	1050	1200	1350	1500	1800	2100	2400	3000
C-Tips or V-Tips Required	4	5	6	7	8	9	10	12	14	16	20

Shaded items are made to order.
Lead time: 15 working days

Product Notes:

- Patent-pending Enhanced Service Advantage Cartridge™ allows for easy removal in even the dirtiest conditions.
- Pole Length: Belt width plus 54" (1350mm) (single cartridge cleaners); Belt width plus 60" (1500mm) (dual cartridge cleaners).
- Two-way cushions allow cleaning in both directions.
- C-Tips are for mechanically fastened or vulcanized belts. V-Tips are for vulcanized belts only.
- Tensioner mounting brackets included for fast and easy installation.
- Cartridge Removal Kit included for easy removal of the cartridge.

R-Type ESAC Cartridge Kits with C-Tips

BELT WIDTH		ORDERING NUMBER	ITEM CODE	WT. LBS.
in.	mm			
24	600	R-CARK-C24/600	78098	27.1
30	750	R-CARK-C30/750	78099	32.3
36	900	R-CARK-C36/900	78100	36.4
42	1050	R-CARK-C42/1050	78101	42.6
48	1200	R-CARK-C48/1200	78102	47.7
54	1350	R-CARK-C54/1350	78103	52.9
60	1500	R-CARK-C60/1500	78104	58.2
72	1800	R-CARK-C72/1800	78105	68.5
60	1500	R-CARK2-C60/1500	78114	69.6
72	1800	R-CARK2-C72/1800	78115	74.8
84	2100	R-CARK2-C84/2100	78116	85.2
96	2400	R-CARK2-C96/2400	78117	95.5
120	3000	R-CARK2-C120/3000	78118	116.5

Lead time: 1 working day

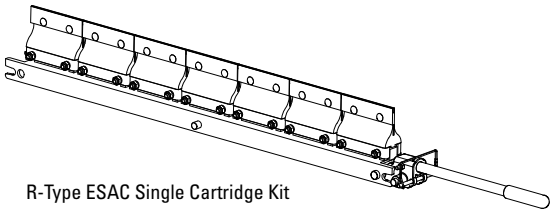

R-Type ESAC Single Cartridge Kit

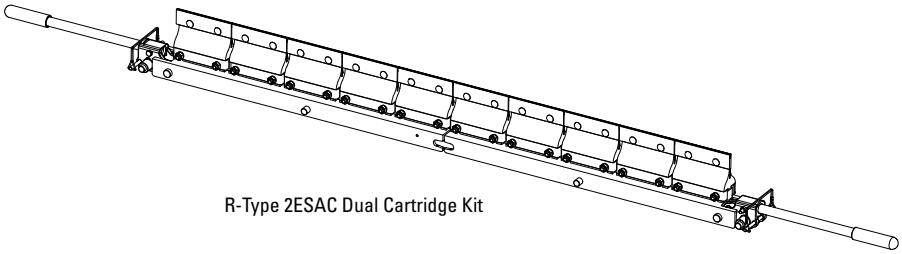

R-Type 2ESAC Dual Cartridge Kit

R-Type ESAC Cartridge Kits with V-Tips*

BELT WIDTH		ORDERING NUMBER	ITEM CODE	WT. LBS.
in.	mm			
24	600	R-CARK-V24/600	78106	27.1
30	750	R-CARK-V30/750	78107	32.3
36	900	R-CARK-V36/900	78108	36.4
42	1050	R-CARK-V42/1050	78109	42.6
48	1200	R-CARK-V48/1200	78110	47.7
54	1350	R-CARK-V54/1350	78111	52.9
60	1500	R-CARK-V60/1500	78112	58.2
72	1800	R-CARK-V72/1800	78113	68.5
60	1500	R-CARK2-V60/1500	78119	69.6
72	1800	R-CARK2-V72/1800	78120	74.8
84	2100	R-CARK2-V84/2100	78121	85.2
96	2400	R-CARK2-V96/2400	78122	95.5
120	3000	R-CARK2-V120/3000	78123	116.5

*NOTE: V-Tips can be used ONLY on vulcanized belts.
Lead time: 1 working day

Shaded items are made to order.
Lead time: 15 working days

Specifications & Guidelines

Pole Length Specifications*

VERSION	CLEANER SIZE		BLADE WIDTH		POLE LENGTH		MAXIMUM CONVEYOR SPAN	
	in.	mm	in.	mm	in.	mm	in.	mm
Single	24	600	24	600	78	1950	66	1650
	30	750	30	750	84	2100	72	1800
	36	900	36	900	90	2250	78	1950
	42	1050	42	1050	96	2400	84	2100
	48	1200	48	1200	102	2550	90	2250
	54	1350	54	1350	108	2700	96	2400
	60	1500	60	1500	114	2850	102	2550
	72	1800	72	1800	126	3150	114	2850
Dual	60	1500	60	1500	120	3000	108	2700
	72	1800	72	1800	132	3300	120	3000
	84	2100	84	2100	144	3600	132	3300
	96	2400	96	2400	156	3900	144	3600
	120	3000	120	3000	180	4500	168	4200

*For special extra long pole length requirements a Pole Extender Kit (#76024) is available that provides 30" (750mm) of extended pole length. (155). Pole Diameter - 2-7/8" (73mm)

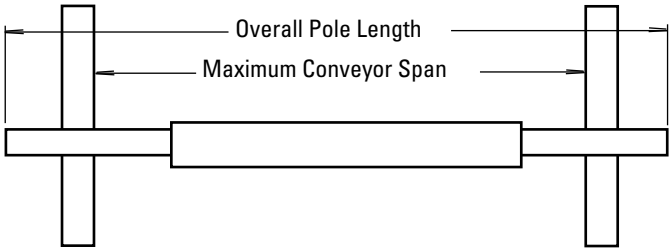

Clearance Guidelines for Installation

VERSION	HORIZONTAL CLEARANCE REQUIRED		VERTICAL CLEARANCE REQUIRED	
	in.	mm	in.	mm
Single	4-1/2	114	10	254
Dual	4-1/2	114	11-3/4	298

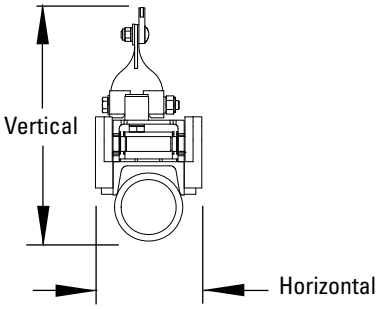

Aluminum Content

ALUMINUM ALLOY TYPE	PERCENT	
	Mg Magnesium	Ti Titanium
6061	1.0%	0.0%

Specifications:

- Maximum Belt Speed .....1000 FPM (5M/sec)
- Temperature Rating .....-30°F to 180°F (-35°C to 82°C)
- Usable Blade Wear Length.....3/8" (9mm)
- Blade Materials .....C-Tip: Impact Resistant Tungsten Carbide (works with mechanical fasteners)
  V-Tip: Long Life Tungsten Carbide (for vulcanized belts only)
- Available for Belt Widths .....24" to 120" (600 to 3000mm). Other sizes available upon request.
- CEMA Cleaner Rating .....Class 4

Replacement Parts List

R-Type® ESAC
Secondary Cleaner
with Enhanced Service Advantage Cartridge

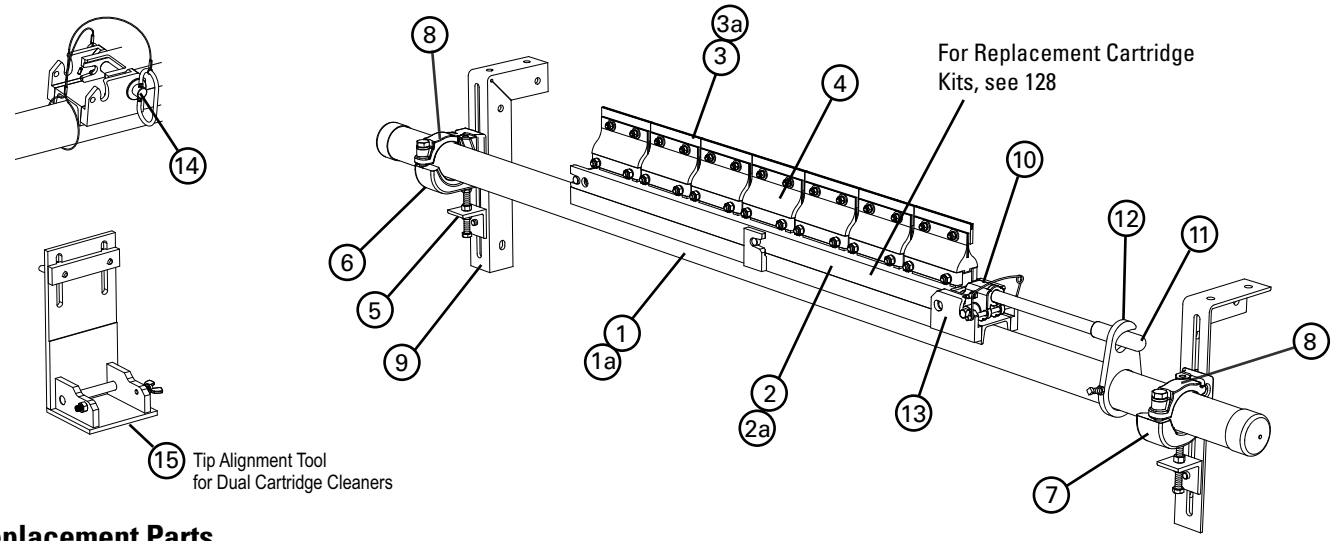

Replacement Parts

REF	DESCRIPTION	ORDERING NUMBER	ITEM CODE	WT. LBS.
1	ESAC Cartridge Pole 24"	SACPL-24/600	77887	65.4
	ESAC Cartridge Pole 30"	SACPL-30/750	77888	71.2
	ESAC Cartridge Pole 36"	SACPL-36/900	77889	77.1
	ESAC Cartridge Pole 42"	SACPL-42/1050	77890	82.9
	ESAC Cartridge Pole 48"	SACPL-48/1200	77891	88.8
	ESAC Cartridge Pole 54"	SACPL-54/1350	77892	94.6
	ESAC Cartridge Pole 60"	SACPL-60/1500	77893	100.5
	ESAC Cartridge Pole 72"	SACPL-72/1800	77894	112.2
	ESAC Cartridge Center Pole 60" (Dual)	SACPL2-60/1500	77895	77.3
	ESAC Cartridge Center Pole 72" (Dual)	SACPL2-72/1800	77896	89.5
	ESAC Cartridge Center Pole 84" (Dual)	SACPL2-84/2100	77897	101.8
	ESAC Cartridge Center Pole 96" (Dual)	SACPL2-96/2400	77898	114.1
	ESAC Cartridge Center Pole 120" (Dual)	SACPL2-120/3000	77899	142.3
1a	Extender Pole (for use with Dual Cartridge Center Pole)	MHP-EP	76392	54.0
2	ESAC Cartridge 24"	CART-24/600	77900	3.5
	ESAC Cartridge 30"	CART-30/750	77901	4.3
	ESAC Cartridge 36"	CART-36/900	77902	5.1
	ESAC Cartridge 42"	CART-42/1050	77903	5.9
	ESAC Cartridge 48"	CART-48/1200	77904	6.7
	ESAC Cartridge 54"	CART-54/1350	77905	7.4
	ESAC Cartridge 60"	CART-60/1500	77906	8.4
	ESAC Cartridge 72"	CART-72/1800	77907	10.0
	ESAC Cartridge 60" (Dual)	CART2-60/1500	77908	8.6
	ESAC Cartridge 72" (Dual)	CART2-72/1800	77909	10.2
	ESAC Cartridge 84" (Dual)	CART2-84/2100	77910	11.7
	ESAC Cartridge 96" (Dual)	CART2-96/2400	77911	13.3
	ESAC Cartridge 120" (Dual)	CART2-120/3000	77912	16.8
2a	ESAC Cartridge R-Type Adapter Plate 24"	RCAP-24/600	77921	6.3
	ESAC Cartridge R-Type Adapter Plate 30" §	RCAP-30/750	77922	7.9
	ESAC Cartridge R-Type Adapter Plate 36" §	RCAP-36/900	77923	9.4
	ESAC Cartridge R-Type Adapter Plate 42" §	RCAP-42/1050	77924	11.1
	ESAC Cartridge R-Type Adapter Plate 48" §	RCAP-48/1200	77925	12.6
	ESAC Cartridge R-Type Adapter Plate 54"	RCAP-54/1350	77926	14.2
	ESAC Cartridge R-Type Adapter Plate 60" §	RCAP-60/1500	77927	15.8
	ESAC Cartridge R-Type Adapter Plate 72"	RCAP-72/1800	77928	19.0

§ If using a dual cartridge, please take the cleaner size and divide by two. That dimension is the size of the brackets needed for conversion to a P-Type cleaner.

REF	DESCRIPTION	ORDERING NUMBER	ITEM CODE	WT. LBS.
3	C-Tip*	ICT6	74535	0.7
3a	R V-Tip* (for vulcanized belts only)	RSA150	73628	1.3
4	R2 C-Tip Cushion*	RSA	76249	2.0
5	Adjusting Bracket Kit* (1 ea.)	PAB	75513	1.5
6	HD Pole Clamp Kit Left* (1 ea.) (incl. item 8)	CCKHDL	79225	8.7
7	HD Pole Clamp Kit Right* (1 ea.) (incl. item 8)	CCKHDR	79229	8.7
8	HD Cradle Clamp Top Strap (1 ea.) for use with L or R HD Pole Clamp Kit	CCKHDTS	79233	1.7
9	Mounting Bracket Kit (1 Right and 1 Left)	EZS2MBK	75666	13.0
-	HD Cradle Clamp Mounting Kit* (incl. 2 items 5; 1 ea. items 6, 7 & 9)	CCMKHD	78920	36.7
10	ESAC Removal Knuckle	SACRKN	77882	3.2
11	ESAC Removal Handle	SACRH	77883	3.0
12	ESAC Handle Lock Plate	SACRHL	77884	1.7
13	Knuckle Retainer Pin	SACKRP	77885	0.2
14	SAC Hitch Pin	SACHP2	77768	0.9
-	ESAC Removal Kit (includes 1 ea. items 10-14)	SACRKT	77886	9.0
15	ESAC Cartridge Tip Alignment Tool (Dual)	SAC2-TIP-TL	77866	2.5

*Hardware Included
Lead Time: 1 working day

Shaded items are made to order.
Lead time: 15 working days

Product Ordering Information

MHS ESAC
HD Secondary Cleaner
with Enhanced Service Advantage Cartridge

MHS ESAC Single Cartridge

MHS 2ESAC Dual Cartridge

MHS ESAC Secondary with C-Tips

BELT WIDTH in.	BELT WIDTH mm	ORDERING NUMBER	ITEM CODE	WT. LBS.
24	600	MHS-24-ESAC	77840	195.0
30	750	MHS-30-ESAC	77841	206.5
36	900	MHS-36-ESAC	77842	218.5
42	1050	MHS-42-ESAC	77843	230.1
48	1200	MHS-48-ESAC	77844	241.6
54	1350	MHS-54-ESAC	77845	253.2
60	1500	MHS-60-ESAC	77846	264.9
72	1800	MHS-72-ESAC	77847	288.4
60	1500	MHS-60-2ESAC	77848	309.1
72	1800	MHS-72-2ESAC	77849	332.9
84	2100	MHS-84-2ESAC	77850	356.6
96	2400	MHS-96-2ESAC	77851	381.1
120	3000	MHS-120-2ESAC	77852	432.5

Lead time: 1 working day

MHS ESAC Secondary with V-Tips

BELT WIDTH in.	BELT WIDTH mm	ORDERING NUMBER	ITEM CODE	WT. LBS.
24	600	MHS-24V-ESAC	77853	195.0
30	750	MHS-30V-ESAC	77854	206.5
36	900	MHS-36V-ESAC	77855	218.5
42	1050	MHS-42V-ESAC	77856	230.1
48	1200	MHS-48V-ESAC	77857	241.6
54	1350	MHS-54V-ESAC	77858	253.2
60	1500	MHS-60V-ESAC	77859	264.9
72	1800	MHS-72V-ESAC	77860	288.4
60	1500	MHS-60V-2ESAC	77861	309.1
72	1800	MHS-72V-2ESAC	77862	332.9
84	2100	MHS-84V-2ESAC	77863	356.6
96	2400	MHS-96V-2ESAC	77864	381.1
120	3000	MHS-120V-2ESAC	77865	432.5

*NOTE: V-Tips can be used ONLY on vulcanized belts.
Lead time: 1 working day

Shaded items are made to order.
Lead time: 15 working days

Replacement Tips

ORDERING NUMBER	ITEM CODE	WT. LBS.
ICT6	74535	0.7
RSA150	73628	1.3

Lead time: 1 working day

Replacement Shields

ORDERING NUMBER	ITEM CODE	WT. LBS.
PFS-ESAC	79073	.5
PFRS	76622	.4

Lead time: 1 working day

Tips Required per Cleaner Size

in.	24	30	36	42	48	54	60	72	84	96	120
mm	600	750	900	1050	1200	1350	1500	1800	2100	2400	3000
C-Tips or V-Tips Required	4	5	6	7	8	9	10	12	14	16	20

Product Notes:

- Patent-pending Enhanced Service Advantage Cartridge™ allows for easy removal in even the dirtiest conditions.
- Heavy-duty design to deliver maximum cleaning efficiency on the most demanding, abusive beltlines.
- Pole Length: Belt width plus 54" (1350mm) (single cartridge cleaners); Belt width plus 60" (1500mm) (dual cartridge cleaners).
- Patented PowerFlex™ cushion design to maintain continuous blade-to-belt contact and quick relief from passing mechanical splices.
- C-Tips are for mechanically fastened or vulcanized belts. V-Tips are for vulcanized belts only.
- Visual Blade Tension Check: Measure the tension spring and refer to Spring Length Chart on mounting base for the correct length for best cleaning performance.
- Tensioner mounting brackets included for fast and easy installation.
- Cartridge Removal Kit included for easy removal of the cartridge.

MHS ESAC Cartridge Kits with C-Tips

BELT WIDTH in.	BELT WIDTH mm	ORDERING NUMBER	ITEM CODE	WT. LBS.
24	600	MHS-CARK-C24/600	77929	29.4
30	750	MHS-CARK-C30/750	77930	35.1
36	900	MHS-CARK-C36/900	77931	40.8
42	1050	MHS-CARK-C42/1050	77932	46.5
48	1200	MHS-CARK-C48/1200	77933	52.3
54	1350	MHS-CARK-C54/1350	77934	58.0
60	1500	MHS-CARK-C60/1500	77935	63.8
72	1800	MHS-CARK-C72/1800	77936	75.3
60	1500	MHS-CARK2-C60/1500	77945	70.2
72	1800	MHS-CARK2-C72/1800	77946	81.6
84	2100	MHS-CARK2-C84/2100	77947	93.1
96	2400	MHS-CARK2-C96/2400	77948	104.5
120	3000	MHS-CARK2-C120/3000	77949	127.7

Lead time: 1 working day

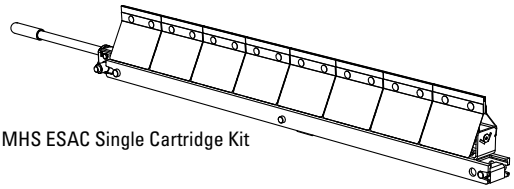

MHS ESAC Single Cartridge Kit

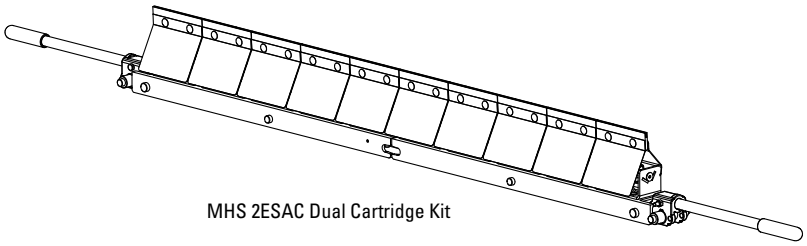

MHS 2ESAC Dual Cartridge Kit

MHS ESAC Cartridge Kits with V-Tips

BELT WIDTH in.	BELT WIDTH mm	ORDERING NUMBER	ITEM CODE	WT. LBS.
24	600	MHS-CARK-V24/600	77937	29.4
30	750	MHS-CARK-V30/750	77938	35.1
36	900	MHS-CARK-V36/900	77939	40.8
42	1050	MHS-CARK-V42/1050	77940	46.5
48	1200	MHS-CARK-V48/1200	77941	52.3
54	1350	MHS-CARK-V54/1350	77942	58.0
60	1500	MHS-CARK-V60/1500	77943	63.8
72	1800	MHS-CARK-V72/1800	77944	75.3
60	1500	MHS-CARK2-V60/1500	77950	70.2
72	1800	MHS-CARK2-V72/1800	77951	81.6
84	2100	MHS-CARK2-V84/2100	77952	93.1
96	2400	MHS-CARK2-V96/2400	77953	104.5
120	3000	MHS-CARK2-V120/3000	77954	127.7

*NOTE: V-Tips can be used ONLY on vulcanized belts.
Lead time: 1 working day

Shaded items are made to order.
Lead time: 15 working days

Specifications & Guidelines

MHS ESAC
HD Secondary Cleaner
with Enhanced Service Advantage Cartridge

Pole Length Specifications*

VERSION	CLEANER SIZE		BLADE WIDTH		POLE LENGTH		MAXIMUM CONVEYOR SPAN	
	in.	mm	in.	mm	in.	mm	in.	mm
Single	24	600	24	600	78	1950	66	1650
	30	750	30	750	84	2100	72	1800
	36	900	36	900	90	2250	78	1950
	42	1050	42	1050	96	2400	84	2100
	48	1200	48	1200	102	2550	90	2250
	54	1350	54	1350	108	2700	96	2400
	60	1500	60	1500	114	2850	102	2550
	72	1800	72	1800	126	3150	114	2850
Dual	60	1500	60	1500	120	3000	108	2700
	72	1800	72	1800	132	3300	120	3000
	84	2100	84	2100	144	3600	132	3300
	96	2400	96	2400	156	3900	144	3600
	120	3000	120	3000	180	4500	168	4200

*For special extra long pole length requirements a Pole Extender Kit (#76024) is available that provides 30" (750mm) of extended pole length. (155). Pole Diameter – 2-7/8" (73mm)

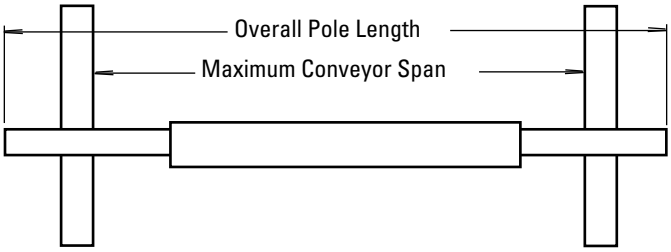

Clearance Guidelines for Installation

VERSION	HORIZONTAL CLEARANCE REQUIRED		VERTICAL CLEARANCE REQUIRED	
	in.	mm	in.	mm
Single	4-1/2	114	11	279
Dual	4-1/2	114	12-1/2	318

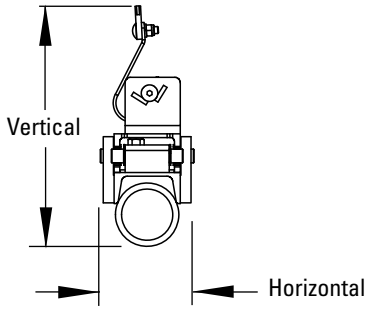

Aluminum Content

ALUMINUM ALLOY TYPE	PERCENT	
	Mg Magnesium	Ti Titanium
6061	1.0%	0.0%

Spring Length Chart for CST Spring Tensioner

BLADE WIDTH	WHITE SPRING	SILVER SPRING	BLACK SPRING	GOLD SPRING
24"	3 1/8"	3 7/8"	N/A	N/A
30"	2 7/8"	3 3/4"	N/A	N/A
36"	N/A	3 3/4"	3 7/8"	N/A
42"	N/A	3 5/8"	3 3/4"	N/A
48"	N/A	3 1/2"	3 5/8"	N/A
54"	N/A	3 3/8"	3 5/8"	N/A
60"	N/A	3 1/4"	3 1/2"	4"
72"	N/A	N/A	3 3/8"	4"
84"	N/A	N/A	3 1/8"	3 7/8"
96"	N/A	N/A	N/A	3 7/8"
120"	N/A	N/A	N/A	3 5/8"

Shading indicates preferred spring option

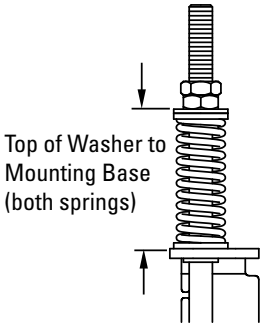

Specifications:

- Maximum Belt Speed .....1200 FPM (6M/sec)
- Temperature Rating .....-30°F to 180°F (-35°C to 82°C)
- Usable Blade Wear Length.....3/8" (9mm)
- Blade Materials .....C-Tip: Impact Resistant Tungsten Carbide (works with mechanical fasteners)
  V-Tip: Long Life Tungsten Carbide (for vulcanized belts only)
- Available for Belt Widths .....24" to 120" (600 to 3000 mm). Other sizes available upon request.
- CEMA Cleaner Rating .....Class 5

Replacement Parts List

MHS ESAC
HD Secondary Cleaner
with Enhanced Service Advantage Cartridge

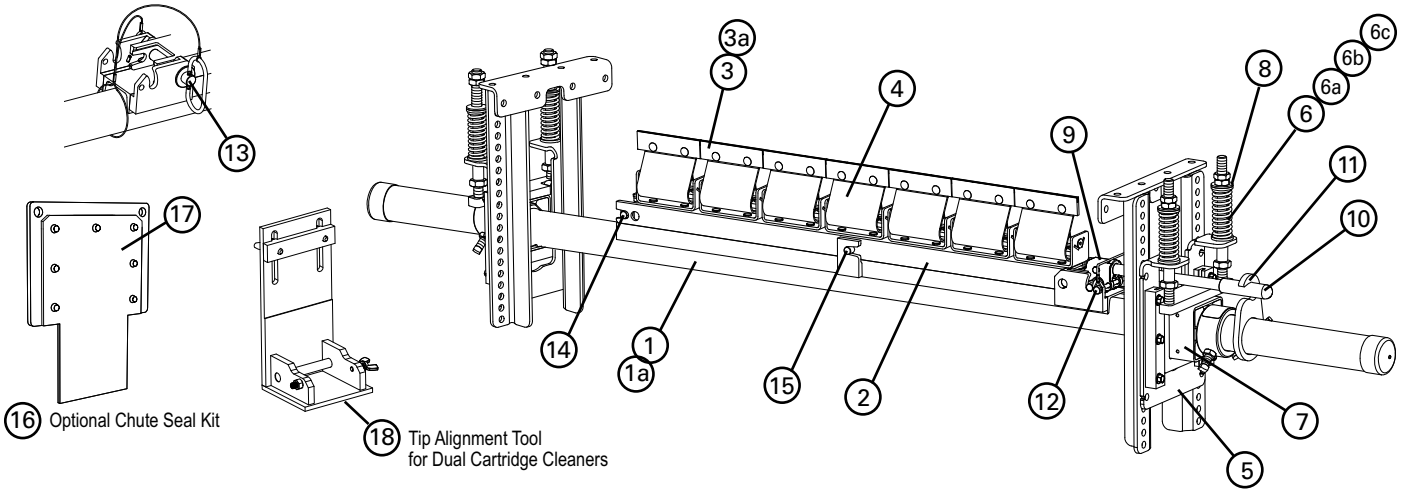

REF	DESCRIPTION	ORDERING NUMBER	ITEM CODE	WT. LBS.
1	ESAC Cartridge Pole 24"	SACPL-24/600	77887	65.4
	ESAC Cartridge Pole 30"	SACPL-30/750	77888	71.2
	ESAC Cartridge Pole 36"	SACPL-36/900	77889	77.1
	ESAC Cartridge Pole 42"	SACPL-42/1050	77890	82.9
	ESAC Cartridge Pole 48"	SACPL-48/1200	77891	88.8
	ESAC Cartridge Pole 54"	SACPL-54/1350	77892	94.6
	ESAC Cartridge Pole 60"	SACPL-60/1500	77893	100.5
	ESAC Cartridge Pole 72"	SACPL-72/1800	77894	112.2
	ESAC Cartridge Center Pole 60" (Dual)	SACPL2-60/1500	77895	77.3
	ESAC Cartridge Center Pole 72" (Dual)	SACPL2-72/1800	77896	89.5
	ESAC Cartridge Center Pole 84" (Dual)	SACPL2-84/2100	77897	101.8
	ESAC Cartridge Center Pole 96" (Dual)	SACPL2-96/2400	77898	114.1
	ESAC Cartridge Center Pole 120" (Dual)	SACPL2-120/3000	77899	142.3
1a	Extender Pole (for use with Dual Cartridge Center Pole)	MHP-EP	76392	54.0
2	ESAC Cartridge 24"	CART-24/600	77900	3.5
	ESAC Cartridge 30"	CART-30/750	77901	4.3
	ESAC Cartridge 36"	CART-36/900	77902	5.1
	ESAC Cartridge 42"	CART-42/1050	77903	5.9
	ESAC Cartridge 48"	CART-48/1200	77904	6.7
	ESAC Cartridge 54"	CART-54/1350	77905	7.4
	ESAC Cartridge 60"	CART-60/1500	77906	8.4
	ESAC Cartridge 72"	CART-72/1800	77907	10.0
	ESAC Cartridge 60" (Dual)	CART2-60/1500	77908	8.6
	ESAC Cartridge 72" (Dual)	CART2-72/1800	77909	10.2
	ESAC Cartridge 84" (Dual)	CART2-84/2100	77910	11.7
	ESAC Cartridge 96" (Dual)	CART2-96/2400	77911	13.3
	ESAC Cartridge 120" (Dual)	CART2-120/3000	77912	16.8
3	C-Tip*	ICT6	74535	0.7
3a	V-Tip* (for vulcanized belts only)	RSA150	73628	1.3
4	PowerFlex™ Cushion*	PFC	75927	4.2
5	CST HD Mounting Base Kit*	CSTHDMK	77871	8.5
6	CST Spring - White (1 ea.) for belts 18"-30" (450-750 mm)	CTS-W	77742	0.5
6a	CST Spring - Silver (1 ea.) for belts 36"-48" (900-1200 mm)	CTS-S	77743	0.5
6b	CST Spring - Black (1 ea.) for belts 54"-84" (1350-2100 mm)	CTS-B	77744	0.6
6c	CST Spring - Gold (1 ea.) for belts 96"-120" (2400-3000 mm)	CTS-G	77745	0.8

Shaded items are made to order. Lead time: 15 working days

REF	DESCRIPTION	ORDERING NUMBER	ITEM CODE	WT. LBS.
7	CST HD Torsion Pole Mount* (1 ea.)	CSTHDPM	77869	16.4
8	CST Bushing Kit (includes 4 bushings)	CSTBK	77037	0.1
-	CST HD Cartridge Tensioner - White (incl. 1 ea. item 5, 7, 8 and 2 ea. item 6) for belts 18"-30" (450-750 mm)	CST1HD-W	77872	30.1
-	CST HD Cartridge Tensioner - Silver (incl. 1 ea. item 5, 7, 8 and 2 ea. item 6a) for belts 36"-48" (900-1200 mm)	CST1HD-S	77873	30.1
-	CST HD Cartridge Tensioner - Black (includes 1 ea. item 5, 7, 8 and 2 ea. item 6b) for belts 54"-84" (1350-2100 mm)	CST1HD-B	77874	30.1
-	CST HD Cartridge Tensioner - Gold (includes 1 ea. item 5, 7, 8 and 2 ea. item 6c) for belts 96"-120" (2400-3000 mm)	CST1HD-G	77875	30.7
9	ESAC Removal Knuckle	SACRKN	77882	3.2
10	ESAC Removal Handle	SACRH	77883	3.0
11	ESAC Handle Lock Plate	SACRHL	77884	1.7
12	Knuckle Retainer Pin	SACKRP	77885	0.2
13	SAC Hitch Pin	SACHP2	77768	0.9
14	Flexible End Pin	FLXEP	91431	1.0
15	Flexible Center Pin	FLXCP	91430	1.0
-	ESAC Removal Kit (includes 1 ea. item 10, 11, 12, 13, 14)	SACRKT	77886	9.0
16	ESAC Chute Seal Kit	SACSK	77052	3.9
17	ESAC Chute Seal Replacement Cover	SACSRC	77065	0.5
18	ESAC Cartridge Tip Alignment Tool (Dual)	SAC2-TIP-TL	77866	2.5

Legacy Replacement Parts for Tensioners shipped prior to Dec. 31, 2014*

L1	SST Adj Rod Kit* (incl. 1 rod, 2 nuts, 2 bushings, 1 washer) for belts 18"-60" (450-1500 mm)	STAK	75847	2.9
L2	SST HD Adj Rod Kit* (incl. 1 rod, 2 nuts, 2 HD bushings, 1 washer) for belts 72"-84" (1800-2100 mm)	STAKHD	75892	3.0
L3	Legacy SST Hat Channel Kit	SSTHK	79070	1.5

*Hardware Included Lead Time: 1 working day

*Verify if legacy parts are needed by looking at threaded rod. If it has standard threads, use legacy parts. If it has flat/acme threads, choose from regular replacement parts.

Standard thread profile

Acme/trapezoidal thread profile

Product Ordering Information

U-Type® Secondary Cleaner with UST Tensioner (Mild Steel)

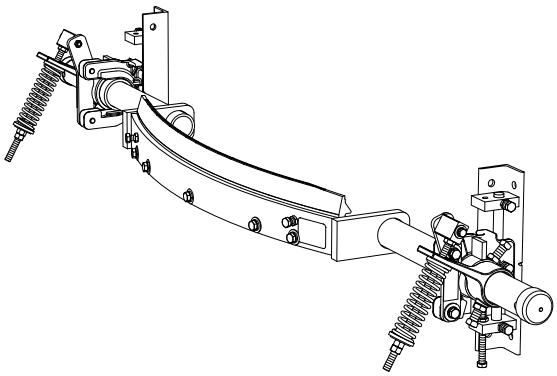

U-Type® with C-Blade (Impact-Resistant Tungsten Carbide)*

CLEANER COMPLETE					REPLACEMENT C-BLADE		
BELT WIDTH		ORDERING	ITEM	WT.	ORDERING	ITEM	WT.
in.	mm	NUMBER	CODE	LBS.	NUMBER	CODE	LBS.
18	450	UTC18	76712	100.0	URCB18/450	76748	5.0
24	600	UTC24	76713	106.7	URCB24/600	76749	6.7
30	750	UTC30	76714	114.4	URCB30/750	76750	8.4
36	900	UTC36	76715	120.1	URCB36/900	76751	10.1
42	1050	UTC42	76716	126.7	URCB42/1050	76752	11.7
48	1200	UTC48	76717	134.5	URCB48/1200	76753	13.5
54	1350	UTC54	76718	141.0	URCB54/1350	76754	15.0
60	1500	UTC60	76719	148.8	URCB60/1500	76755	16.8
72	1800	UTC72	76720	225.2	URCB72/1800	76756	20.2
84	2100	UTC84	76721	241.5	URCB84/2100	76757	23.5

*NOTE: C-Blades can be used on Flexco® Solid Plate, mechanically fastened and vulcanized belts.
Lead time: 1 working day

U-Type® with F-Blade (Polyurethane)*

CLEANER COMPLETE					REPLACEMENT F-BLADE		
BELT WIDTH		ORDERING	ITEM	WT.	ORDERING	ITEM	WT.
in.	mm	NUMBER	CODE	LBS.	NUMBER	CODE	LBS.
18	450	UTF18	76724	84.4	UFB18	74448	3.0
24	600	UTF24	76725	90.8	UFB24	74449	4.0
30	750	UTF30	76726	96.6	UFB30	74450	5.0
36	900	UTF36	76727	102.4	UFB36	74451	6.0
42	1050	UTF42	76728	108.0	UFB42	74452	7.0
48	1200	UTF48	76729	114.1	UFB48	74453	8.0
54	1350	UTF54	76730	119.5	UFB54	74454	9.0
60	1500	UTF60	76731	125.4	UFB60	74455	10.0
72	1800	UTF72	76732	157.5	UFB72	74456	12.0
84	2100	UTF84	76733	172.4	UFB84	74460	14.0

*NOTE: F-Blades (Polyurethane) can be used on mechanically spliced belts and vulcanized belts.
Lead time: 1 working day

Specifications & Guidelines

Pole Length Specifications

CLEANER SIZE		POLE LENGTH		MAXIMUM CONVEYOR SPAN	
in.	mm	in.	mm	in.	mm
18	450	64	1600	54	1350
24	600	70	1750	60	1500
30	750	76	1900	66	1650
36	900	82	2050	72	1800
42	1050	88	2200	78	1950
48	1200	94	2350	84	2100
54	1350	100	2500	90	2250
60	1500	106	2650	96	2400
72	1800	124	3100	114	2850
84	2100	136	3400	126	3150

Pole Diameter - 18" to 54" (450 to 1350mm) cleaner 2-3/8" (60mm)
Pole Diameter - 60" to 84" (1500 to 2400mm) cleaner 2-7/8" (73mm)

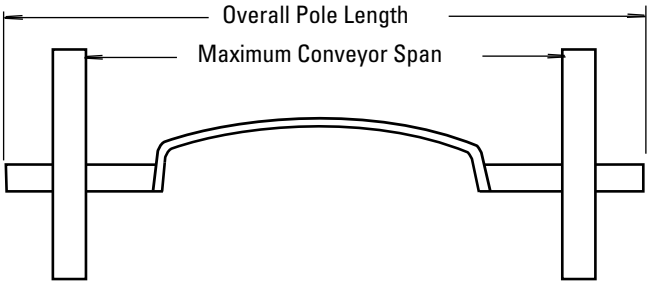

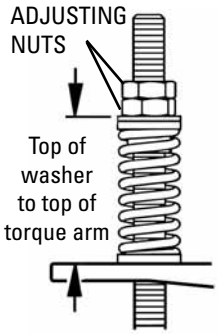

Spring Length Chart

(For Cleaners with UST Tensioners)

Spring Length Chart (for Cleaners with UST Tensioners)							
Blade Width		Purple Spring		Silver Spring		White Spring	
in.	mm	in.	mm	in.	mm	in.	mm
18	450	5 5/8	143	N/A	N/A	N/A	N/A
24	600	5 1/4	133	6	152	N/A	N/A
30	750	4 5/8	117	5 3/4	146	6 1/8	156
36	900	4 1/4	108	5 5/8	143	6	152
42	1050	N/A	N/A	5 1/4	133	5 3/4	146
48	1200	N/A	N/A	4 7/8	124	5 1/2	140
54	1350	N/A	N/A	4 5/8	117	5 3/8	137
60	1500	N/A	N/A	N/A	N/A	5 1/4	133
72	1800	N/A	N/A	N/A	N/A	4 7/8	124
84	2100	N/A	N/A	N/A	N/A	4 5/8	117

Clearance Guidelines For Installation

Cleaner Clearance Requirements

U Cleaner Size		Clearance	
in.	mm	in.	mm
18"	450	6	155
24"	600	7	180
30"	750	8	205
36"	900	8	205
42"	1050	9 1/4	235
48"	1200	10 1/2	270
54"	1350	10 3/4	275
60"	1500	10 3/4	275
72"	1800	10 3/4	275
84"	2100	10 3/4	275
96″	2400	10 3/4	275

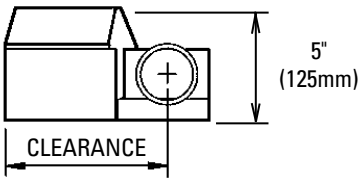

Spring Tensioner Guidelines

(For Cleaners with J-Bolt Tensioners)

- Spring gap = .030" (.7mm)
- * Gauge provided

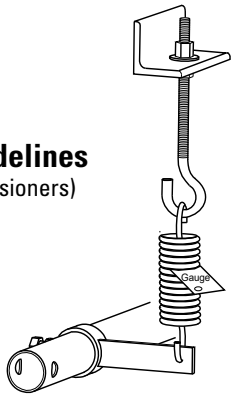

Specifications:

- Maximum Belt Speed .....1300 FPM (6.6M/sec); F-Blade - 1000 FPM (5M/sec)
- Temperature Rating .....-30°F to 180°F (-35°C to 82°C)
- Usable Blade Wear Length.....C-Blade – 3/8" (9mm); F-Blade – 1 3/4" (44mm)
- Available for Belt Widths .....18" to 84" (450 to 2100mm). Other sizes available upon request.
- CEMA Cleaner Rating .....Class 5

Replacement Parts List

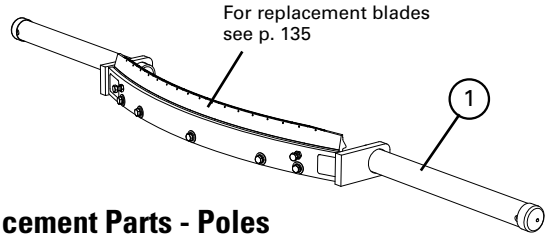

Replacement Parts - Poles

REF	DESCRIPTION	ORDERING NUMBER	ITEM CODE	WT. LBS.
1	18" (450mm) Pole	USP18/450	76772	45.0
	24" (600mm) Pole	USP24/600	76773	50.0
	30" (750mm) Pole	USP30/750	76774	56.0
	36" (900mm) Pole	USP36/900	76775	60.0
	42" (1050mm) Pole	USP42/1050	76776	65.0
	48" (1200mm) Pole	USP48/1200	76777	71.0
	54" (1350mm) Pole	USP54/1350	76778	76.0
	60" (1500mm) Pole	USP60/1500	76779	82.0
	72" (1800mm) Pole	USP72/1800	76780	125.0
	84" (2100mm) Pole	USP84/2100	76781	138.0

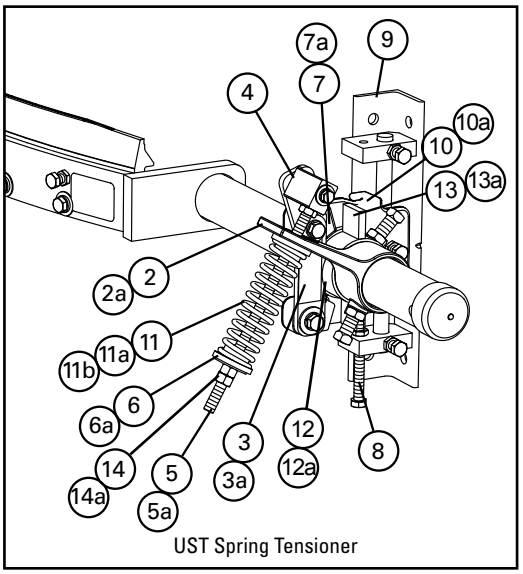

UST Spring Tensioner

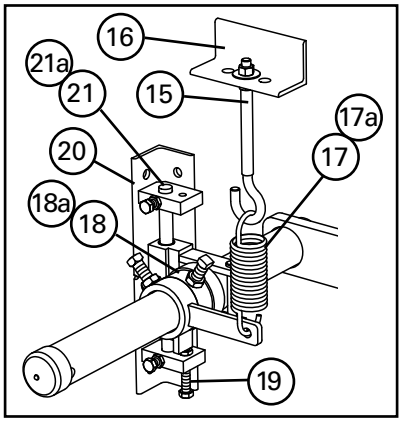

For use in changing UST Spring Tensioner to a J-Bolt Tensioner

Replacement Parts - J-bolt Tensioner

REF	DESCRIPTION	ORDERING NUMBER	ITEM CODE	WT. LBS.
15	J-Bolt (incl. locknut & washer)	STJK	74417	0.7
16	J-Bolt Mount (1 ea.)	STJM	74775	3.0
17	Tension Spring (1 ea.) †	STTS	74419	1.4
17a	HD Tension Spring (1 ea.) §	HDTS	74502	2.0
18	Stop Collar †	USTSC	79299	1.5
18a	HD Stop Collar §	USTSCHD	79300	2.0
19	Adjusting Bolt Kit (1 ea.) (incl. locknut)	ABU	76788	0.2
20	Mounting Bracket Kit* (1 ea.)	UMBK	76789	9.7
21	Slide Plate Kit* (1 ea.) †Δ	USPK	76790	4.6
21a	HD Slide Plate Kit* (1 ea.) §	UHSPK	76791	5.2
—	J-Bolt Conversion Kit † (Optional) (incl. 2 ea. items 15, 16, 17, 18)	UBTK	76977	4.7
—	HD J-Bolt Conversion Kit § (Optional) (incl. 2 ea. items 15, 16, 17a, 18a)	UHDBTK	76978	5.2
—	Standard Mounting Kit* (incl. 1 ea. items 8, 9, 10) † Δ (for blade widths 18"- 54" (450 - 1350mm)	USMK	76792	14.6
—	HD Mounting Kit* (incl. 1 ea. items 8, 9, 10a) § (for blade widths 60"- 84" (1500 - 2100mm)	UHMK	76793	15.5
—	18-54" J-Bolt Complete Tension Kit (incl. 2 ea. 15, 16, 17, 18, 19, 20, 21)†	MMKU	77324	19.3
—	60"+ J-Bolt Complete Tension Kit (incl. 2 ea. 15a, 16, 17a, 18a, 19, 20, 21a)§	MMKUHD	77327	20.7

Replacement Parts - UST Tensioner

REF	DESCRIPTION	ORDERING NUMBER	ITEM CODE	WT. LBS.
2	Torque Arm Kit* (1 ea.) †Δ	ESTAK-EST	76406	3.6
2a	Torque Arm Kit HD* (1 ea.) §	PSTA	75896	11.4
3	Pivot Shaft Bracket Kit* (1 ea.) †Δ	UPSBK	76784	1.7
3a	Pivot Shaft Bracket Kit HD* (1 ea.) §	QMTPSBK	76099	4.3
4	Pivot Block Kit* (1 ea.) †Δ	UPBK	76785	1.0
5	Pivot Rod Kit* (1 ea.) †Δ	ESPRK	76409	1.2
5a	Pivot Rod Kit HD* (1 ea.) §	QMTPAK	76096	4.3
6	Bushing Kit (incl. 2 bushings) †Δ	ESBK-PS	76410	0.1
6a	Bushing Kit HD (incl. 2 bushings) §	QMTBK-W	76098	0.1
7	Standard Pole Bearing (1 ea.) †Δ	USPB2	79206	0.1
7a	HD Pole Bearing (1 ea.) §	UHPB2	79207	0.2
8	Adjusting Bolt Kit (1 ea.) (incl. locknut)	ABU	76788	0.2
9	Mounting Bracket Kit* (1 ea.)	UMBK	76789	9.7
10	Slide Plate Kit* (1 ea.) †Δ	USPK	76790	4.6
10a	HD Slide Plate Kit* (1 ea.) §	UHSPK	76791	5.2
11	Tension Spring - Purple (1 ea.) †	QMTS-P	75845	0.6
11a	Tension Spring - Silver (1 ea.) Δ	ESS-S	76412	1.2
11b	Tension Spring - White (1 ea.) §	PSTS-W	75898	1.7
12	UST Stop Collar Retrofit Kit* †Δ	USTSCK	79202	5.0
12a	HD UST Stop Collar Retrofit Kit* §	USTSCKHD	79204	7.4
13	Stop Collar*	USTSC	79299	1.5
13a	HD Stop Collar*	USTSCHD	79300	2.0
14	Jam Nut Kit UST	JNK-F	79896	0.3
14a	Jam Nut Kit USTHD	JNK-C	79893	0.3
–	UST Spring Tensioner* - Purple † (incl. 1 ea. items 2, 3, 4, 5, 6, 8, 9, 10, 11)	UST-P	76794	25.0
–	UST Spring Tensioner* - Silver Δ (incl. 1 ea. items 2, 3, 4, 5, 6, 8, 9, 10, 11a)	UST-S	77757	25.0
–	UST Spring Tensioner* - White § (incl. 1 ea. items 2a, 3a, 4, 5a, 6a, 8, 9, 10a, 11b)	UST-W	76795	40.0
–	Standard Mounting Kit* (incl. 1 ea. items 8, 9, 10) † Δ (for blade widths 18"- 54" (450 - 1350mm)	USMK	76792	14.6
–	HD Mounting Kit* (incl. 1 ea. items 8, 9, 10a) § (for blade widths 60"- 84" (1500 - 2100mm)	UHMK	76793	15.5

*Hardware included
† Standard components for blade widths 18"-42" (450-1050mm)
Δ Standard components for blade widths 48"-54" (1200-1350mm)
§ HD components for blade widths 60"-84" (1500-2100mm)

Product Ordering Information

MDWS
Secondary Cleaner
DryWipe for Removing Water

MDWS Secondary Belt Cleaner

BELT WIDTH		ORDERING NUMBER	ITEM CODE	WT. LBS.
in.	mm			
24	600	MDWS-24	75868	115.1
30	750	MDWS-30	75869	122.8
36	900	MDWS-36	75870	127.8
42	1050	MDWS-42	75871	138.3
48	1200	MDWS-48	75872	146.8
54	1350	MDWS-54	75873	154.5
60	1500	MDWS-60	75874	162.2
72	1800	MDWS-72	75875	177.7
84	2100	MDWS-84	76806	193.2
96	2400	MDWS-96	79063	208.7

Lead time: 1 working day

MDWS Secondary Belt Cleaner with SAT2 Tensioner

BELT WIDTH		ORDERING NUMBER	ITEM CODE	WT. LBS.
in.	mm			
24	600	MDWS-24P	78745	115.1
30	750	MDWS-30P	78746	122.8
36	900	MDWS-36P	78747	127.8
42	1050	MDWS-42P	78748	138.3
48	1200	MDWS-48P	78749	146.8
54	1350	MDWS-54P	78750	154.5
60	1500	MDWS-60P	78751	162.2
72	1800	MDWS-72P	78752	177.7
84	2100	MDWS-84P	78753	193.2
96	2400	MDWS-96P	79064	208.7

Lead time: 1 working day

Replacement ConShear™ DW Blades
(Color Identification: Black)

BELT WIDTH		ORDERING NUMBER	ITEM CODE	WT. LBS.
in.	mm			
24	600	CDWB24	75884	12.8
30	750	CDWB30	75885	15.5
36	900	CDWB36	75886	18.3
42	1050	CDWB42	75887	21.0
48	1200	CDWB48	75888	23.8
54	1350	CDWB54	75889	26.5
60	1500	CDWB60	75890	29.2
72	1800	CDWB72	75891	34.7
84	2100	CDWB84	76942	40.5
96	2400	CDWB96	79062	46.3

Actual blade width is belt width + 4".
ConShear DW Blades are black for easy identification.
Lead time: 1 working day

Optional Mounting Kits

DESCRIPTION	ORDERING NUMBER	ITEM CODE	WT. LBS.
Standard Mounting Bracket Kit *	SSTSMB	76071	34.3
Long Mounting Bracket Kit *	SSTLMB	76072	43.5
Optional Top Angle Kit *	SSTOTA	76073	10.5

*Hardware Included
Lead time: 1 working day

Product Notes:

- The ConShear™ "DryWipe" (DW) Blade is excellent for removing water from the belt. Use as the final cleaner in a cleaning system.
- Actual blade width is belt width plus 4" (100mm). The extra length ensures the water is removed from the belt.
- Pole Length: Belt width plus 60" (1500mm) for cleaners up to 60" (1500mm), belt width plus 54" (1350mm) for cleaners over 60" (1500mm). For longer requirements, see Accessories – Pole Extender Kit (155).
- Visual Blade Tension Check: Measure the tension spring and refer to the Spring Length Chart on mounting base for the correct length for best cleaning performance.
- To make cleaner installation easier and quicker, see Optional Mounting Kits (155).

Product Ordering Information

Air Tanks

ORDERING NUMBER	ITEM CODE	WT. LBS.
PAT1	78684	13.0
PAT2	78685	13.0

PAT1 (Single)

PAT2 (Dual)

Replacement Parts List

REF	DESCRIPTION	ORDERING NUMBER	ITEM CODE	WT. LBS.
1	Tank Label Kit	PATLK	78791	0.1
2	Tank Hose Kit (incl. 1 ea. 10' hose and 1' poly spiral wrap, 2 hose clamps)	PATHK	78794	1.5

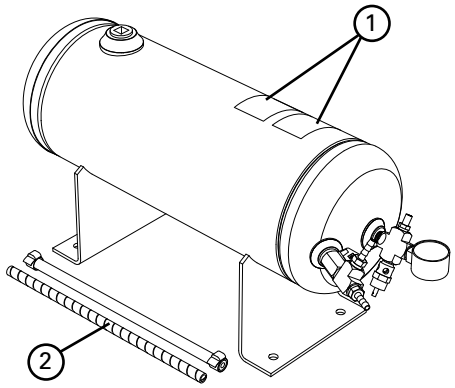

Product Notes:

- For use with PAT cleaner assemblies and PAT control box.
- Single for applications with one cleaner, double for applications with two cleaners.
- 150# pop-off valve for safe pressurizing/charging of Air Tank.
- ASME construction.

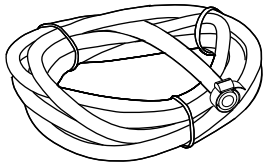

Air Line Connection for Site-Accessible Air

ORDERING NUMBER	ITEM CODE	WT. LBS.
PATHK*	78794	1.5

* incl. 10' hose, 1' poly spiral wrap, 2 hose clamps

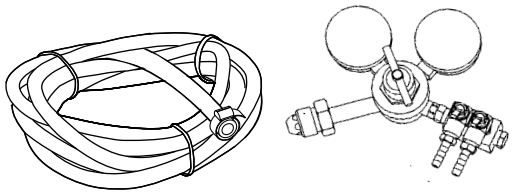

Nitrogen Tank Connection for Site-Provided Nitrogen Tank

ORDERING NUMBER	ITEM CODE	WT. LBS.
PANK*	78799	5.0

* incl. Nitrogen Regulator, 10' hose, 2 hose clamps

Specifications & Guidelines

MDWS
Secondary Cleaner
DryWipe for Removing Water

Pole Length Specifications*

CLEANER SIZE		BLADE WIDTH		POLE LENGTH		MAXIMUM CONVEYOR SPAN	
in.	mm	in.	mm	in.	mm	in.	mm
24	600	28	700	84	2100	68	1700
30	750	34	850	90	2250	74	1850
36	900	40	1000	96	2400	80	2000
42	1050	46	1150	102	2550	86	2150
48	1200	52	1300	108	2700	92	2300
54	1350	58	1450	114	2850	98	2450
60	1500	64	1600	120	3000	104	2600
72	1800	76	1900	126	3150	116	2900
84	2100	88	2200	138	3450	128	3200
96"	2400	100	2500	150	3750	140	3500

*For special extra long pole length requirements a Pole Extender Kit (#76024) is available that provides 30" (750mm) of extended pole length. (155).
Pole Diameter – 2-7/8" (73mm)

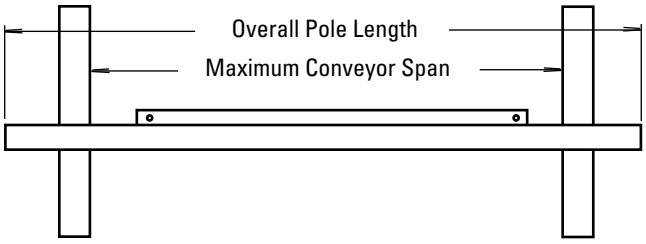

Clearance Guidelines for Installation

HORIZONTAL CLEARANCE REQUIRED		VERTICAL CLEARANCE REQUIRED	
in.	mm	in.	mm
4	100	10	250

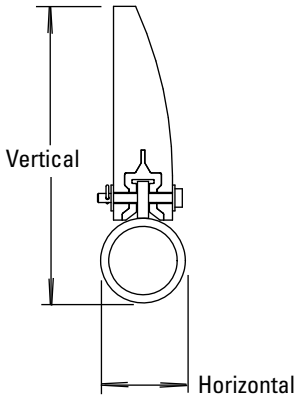

Spring Length Chart
with SST Spring Tensioner

BLADE WIDTH	WHITE SPRING	SILVER SPRING	BLACK SPRING	GOLD SPRING
24"	3 1/8"	3 7/8"	N/A	N/A
30"	2 7/8"	3 3/4"	N/A	N/A
36"	N/A	3 3/4"	3 7/8"	N/A
42"	N/A	3 5/8"	3 3/4"	N/A
48"	N/A	3 1/2"	3 5/8"	N/A
54"	N/A	3 3/8"	3 5/8"	N/A
60"	N/A	3 1/4"	3 1/2"	N/A
72"	N/A	N/A	3 3/8"	3 5/8"
84"	N/A	N/A	3"	3 1/2"
96"	N/A	N/A	N/A	3 3/8"
108"	N/A	N/A	N/A	3 1/2"
120"	N/A	N/A	N/A	3 3/8"

Shading indicates preferred spring option

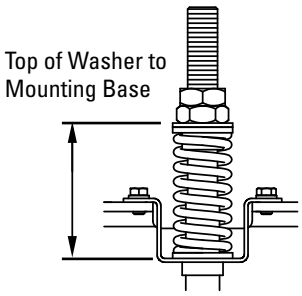

PAT Pressure Chart

BLADE WIDTH	PSI
18"	15#
24"	19#
30"	23#
36"	27#
42"	31#
48"	35#
54"	39#
60"	43#
72"	51#
84"	59#
96"	67#

Specifications:

- Maximum Belt Speed .....1000 FPM (5M/sec)
- Temperature Rating .....-30°F to 180°F (-35°C to 82°C)
- Usable Blade Wear Length.....4-1/2" (113mm)
- Blade Height.....7-1/4" (185mm)
- Blade .....Polyurethane with UHMW additive (softer durometer to squeegee water off

- Available for Belt Widths .....24" to 96" (600 to 2400 mm). Other sizes available upon request.
- CEMA Cleaner Rating .....Class 4

Replacement Parts List

MDWS
Secondary Cleaner
DryWipe for Removing Water

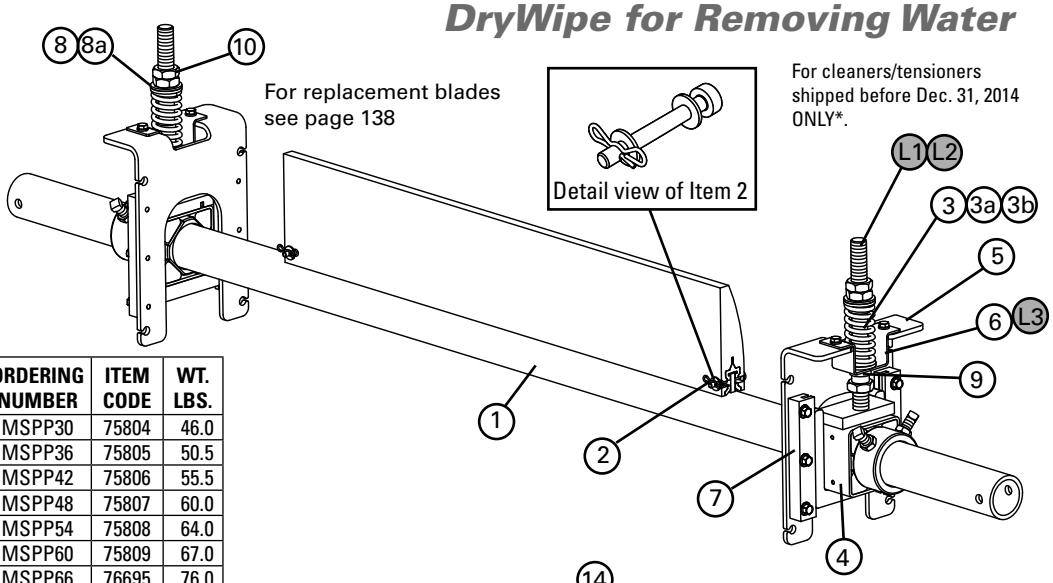

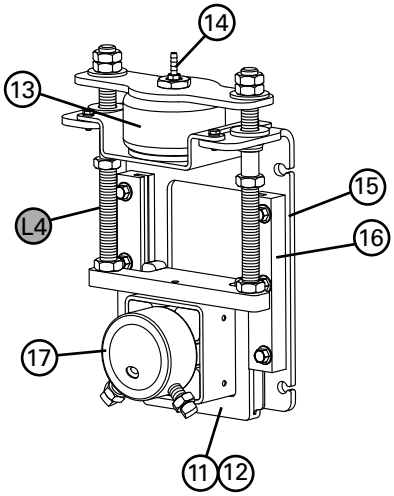

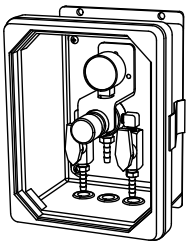

18 PAT Control Box

Replacement Parts

REF	DESCRIPTION	ORDERING NUMBER	ITEM CODE	WT. LBS.
1	24" (600mm) Pole	MSPP30	75804	46.0
	30" (750mm) Pole	MSPP36	75805	50.5
	36" (900mm) Pole	MSPP42	75806	55.5
	42" (1050mm) Pole	MSPP48	75807	60.0
	48" (1200mm) Pole	MSPP54	75808	64.0
	54" (1350mm) Pole	MSPP60	75809	67.0
	60" (1500mm) Pole	MSPP66	76695	76.0
	72" (1800mm) Pole	DWP-72	75883	90.0
	84" (2100mm) Pole	DWP-84	76815	100.0
	96 (2400mm) Pole	DWP-96	79060	110.0
2	Blade Pin Kit* (1 ea.)	MSPBPK	75831	0.1
3	Tension Spring - White (1 ea.) for belts 18" - 30" (450-750mm)	STS-W	75846	0.5
3a	Tension Spring - Silver (1 ea.) for belts 36" - 60" (900-1500mm)	STS-S	75843	0.8
3b	Tension Spring - Black (1 ea.) for belts 72" - 84" (1800-2100mm)	STS-B	75844	1.0
3c	Tension Spring - Gold (1 ea.) for belts 96" (2400mm)	STS-G	78142	1.3
4	HD Torsion Pole Mount* (1 ea.) (includes adjusting rod, 3 nuts & sleeve) (See 8 & 8a for bushings)	SSTHDPM	77868	15.0
5	SST HD Mounting Base Kit* (includes 1 mounting base, 2 slide guides, top hat bracket & bottom bushing)	SSTHDMK	77870	10.2
6	SST Hat Bracket (pair)	SSTHB	79582	3.5
7	SST Slide Guide Kit* (incl. 2 slide guides)	STGK2	77867	1.1
8	SST Bushing Kit - White/Silver (includes 2 bushings)	SSTBK-W	76636	0.1
8a	SST Bushing Kit - Black/Gold (includes 2 bushings)	SSTBK-B	76637	0.1
9	SST Lower Bushing Kit (pair)	SSTLBK	79493	0.1
10	Jam Nut Kit SST Tensioner	JNK-C	79893	0.3
–	HD Spring Tensioner* - White includes 2 each items 3, 4, 5 & 8) for belts 18" - 30" (450-750mm)	SST2HD-W	77879	60.6
–	HD Spring Tensioner* - Silver (includes 2 each items 3a, 4, 5 & 8) for belts 36" - 60" (900-1500mm)	SST2HD-S	77880	61.4
–	HD Spring Tensioner* - Black (includes 2 each items 3b, 4, 5 & 8a) for belts 72" - 84" (1800-2100mm)	SST2HD-B	77881	62.0
–	HD Spring Tensioner* - Gold (includes 2 each items 3c, 4, 5 & 8a) for belts 96" (2400mm)	SST2HD-G	79041	62.6

*Hardware Included
Lead time: 1 working day

Legacy Replacement Parts for Tensioners shipped prior to Dec. 31, 2014*

L1	Adjusting Rod Kit (includes 1 rod, 2 nuts, 1 bushing, 1 washer) for belts 24" - 60" (600-1500mm)	STAK	75847	2.9
L2	HD Adjusting Rod Kit (includes 1 rod, 2 nuts, 1 HD bushing, 1 washer) for belts 72"-84" (1800-2100mm)	STAKHD	75892	3.0
L3	Legacy SST Hat Channel Kit	SSTHK	79070	1.5
L4	SAT2 Adjusting Rod Kit	SAT2AK	78733	5.0
–	SST Tensioner Bushing Update Kit (includes 2 lower bushings, 2 sleeves, 2 nuts)	SST-BUK	76943	0.3

* See note on page 134 to verify if legacy parts are needed.

Secondary Air Tensioner 2 Replacement Parts

REF	DESCRIPTION	ORDERING NUMBER	ITEM CODE	WT. LBS.
11	SAT2 w/PAT Control Box	SAT2PAT	78735	43.5
12	SAT2 w/o Control Box	SAT2NCB	78703	41.0
13	SAT Air/Water Bag Kit	SATB	76083	5.1
14	SAT 1/8" Hose Barb Kit	SATHB	76084	0.1
15	SAT2 Mounting Base Kit	SAT2MK	78704	11.6
16	ST Slide Guide Kit	STGK2	77867	1.1
17	SAT2 Torsion Pole Mount (incl. threaded rods & 6 nuts)	SAT2PM	78732	11.1
18	PAT Control Box 100psi	PACB100	79656	11.0

Lead time: 1 working day

Spring Tensioner Selection Chart

CLEANER SIZE	77879 SST2HD-W	77880 SST2HD-S	77881 SST2HD-B	79041 SST2HD-G
MDWS 24" - 30" (600 - 750 mm)	X			
MDWS 36" - 60" (900 - 1500 mm)		X		
MDWS 72" - 84" (1800 - 2100 mm)			X	
MDWS 96" (2400 mm)				X

Product Ordering Information

Motorized Brush Cleaner with 208-230/460VAC 3-Phase Motor

BELT WIDTH in.	BELT WIDTH mm	ORDERING NUMBER	ITEM CODE	WT. LBS.
18	450	MBC-18	79494	136.7
24	600	MBC-24	79495	146.5
30	750	MBC-30	79496	150.2
36	900	MBC-36	79497	156.5
42	1050	MBC-42	79498	162.6
48	1200	MBC-48	79499	179.0
54	1350	MBC-54	79500	185.9
60	1500	MBC-60	79501	192.0
72	1800	MBC-72	79502	205.1
84	2100	MBC-84	79503	217.5

Lead time: 1 working day

with IP66 Motor

ORDERING NUMBER	ITEM CODE	WT. LBS.
MBC-18-S	91571	136.7
MBC-24-S	91572	146.5
MBC-30-S	91573	150.2
MBC-36-S	91574	156.5
MBC-42-S	91575	162.6
MBC-48-S	91576	179.0
MBC-54-S	91577	185.9
MBC-60-S	91578	192.0
MBC-72-S	91579	205.1
MBC-84-S	91580	217.5

Motorized Brush Cleaner with 575V 3-Phase Motor

BELT WIDTH in.	BELT WIDTH mm	ORDERING NUMBER	ITEM CODE	WT. LBS.
18	450	MBC-18-575V	79914	136.7
24	600	MBC-24-575V	79915	146.5
30	750	MBC-30-575V	79916	150.2
36	900	MBC-36-575V	79917	156.5
42	1050	MBC-42-575V	79918	162.6
48	1200	MBC-48-575V	79919	179.0
54	1350	MBC-54-575V	79920	185.9
60	1500	MBC-60-575V	79921	192.0
72	1800	MBC-72-575V	79922	205.1
84	2100	MBC-84-575V	79923	217.5

Lead time: 1 working day

with IP66 Motor

ORDERING NUMBER	ITEM CODE	WT. LBS.
MBC-18-575V-S	91581	136.7
MBC-24-575V-S	91582	146.5
MBC-30-575V-S	91583	150.2
MBC-36-575V-S	91584	156.5
MBC-42-575V-S	91585	162.6
MBC-48-575V-S	91586	179.0
MBC-54-575V-S	91587	185.9
MBC-60-575V-S	91588	192.0
MBC-72-575V-S	91589	205.1
MBC-84-575V-S	91590	217.5

Replacement Brushes

BELT WIDTH in.	BELT WIDTH mm	ORDERING NUMBER	ITEM CODE	WT. LBS.
18	450	MBRD-18	79514	9.6
24	600	MBRD-24	79515	13.5
30	750	MBRD-30	79516	17.1
36	900	MBRD-36	79517	20.5
42	1050	MBRD-42	79518	23.7
48	1200	MBRD-48	79519	26.8
54	1350	MBRD-54	79520	30.7
60	1500	MBRD-60	79521	33.9
72	1800	MBRD-72	79522	41.0
84	2100	MBRD-84	79523	47.5

Lead time: 1 working day

Motorized Brush Cleaner

Optional Mounting Brackets (Pair)

ORDERING NUMBER	ITEM CODE	WT. LBS.
MBCDBK	79536	28.9

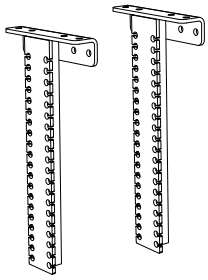

Product Notes:

- Spins opposite the belt direction for optimal cleaning.
- Uniquely patterned bristles aid in reducing material buildup and clogging.
- Adjustable tensioners allow easy brush-to-belt adjustment as the bristles wear.
- Works on mechanically spliced or vulcanized belts.

Specifications & Guidelines

Specifications

Belt Speed	Up to 700 fpm (3.5M/sec)
Vertical and Horizontal Clearance	12" (305mm)
Temperature Range	-20ºF to 180ºF (-30ºC to 82ºC)
Maximum Chevron or Cleat Height	1/2" (13mm)
Bristle Length	3-1/4" (83mm)
Overall Diameter	12" (305mm)
Shaft Length	Belt Width plus 42" (1067mm)
Shaft Diameter	1-7/16" (36.5 mm)
Motor Voltage and HP Options	**208-230/460VAC 3 Phase*** 1 HP (cleaners 18-42" (450-1050mm) 2 HP (cleaners 48-84" (1200-2100mm)
	575V 3 Phase* 1 HP (cleaners 18-36" (450-900mm) 2 HP (cleaners 42-84" (1050-2100mm)
Motor Ingress Protection	IP55 or IP66
CEMA Cleaner Rating	Class 4

*Other motors available upon request

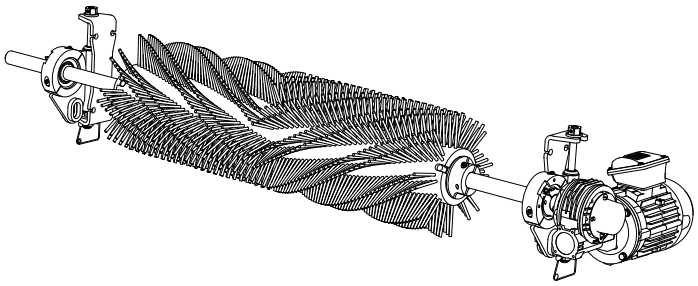

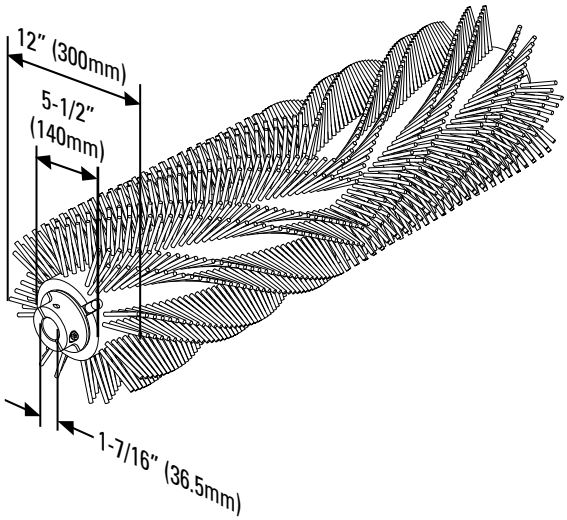

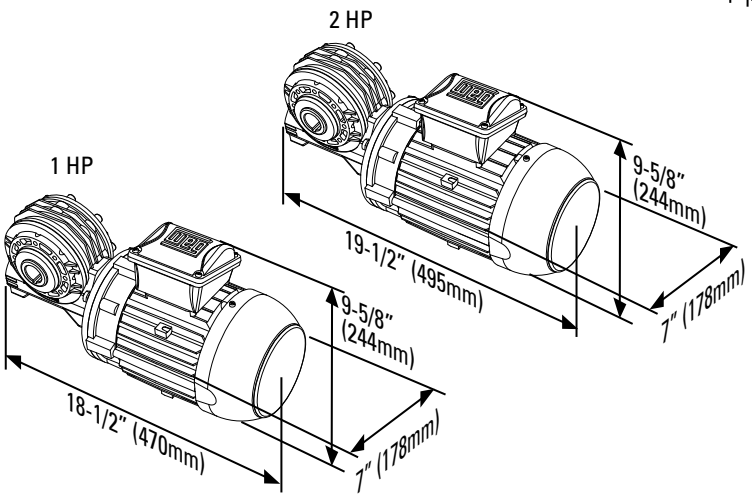

Shaft Measurements

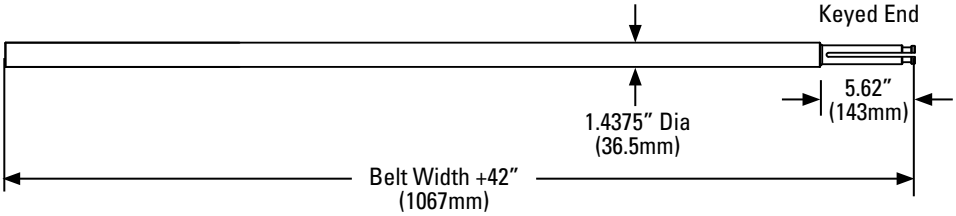

Product Notes:

- Spins opposite the belt direction for optimal cleaning.
- Uniquely patterned bristles aid in reducing material buildup and clogging.
- Adjustable tensioners allow easy brush-to-belt adjustment as the bristles wear.
- Works on mechanically spliced or vulcanized belts.

Replacement Parts

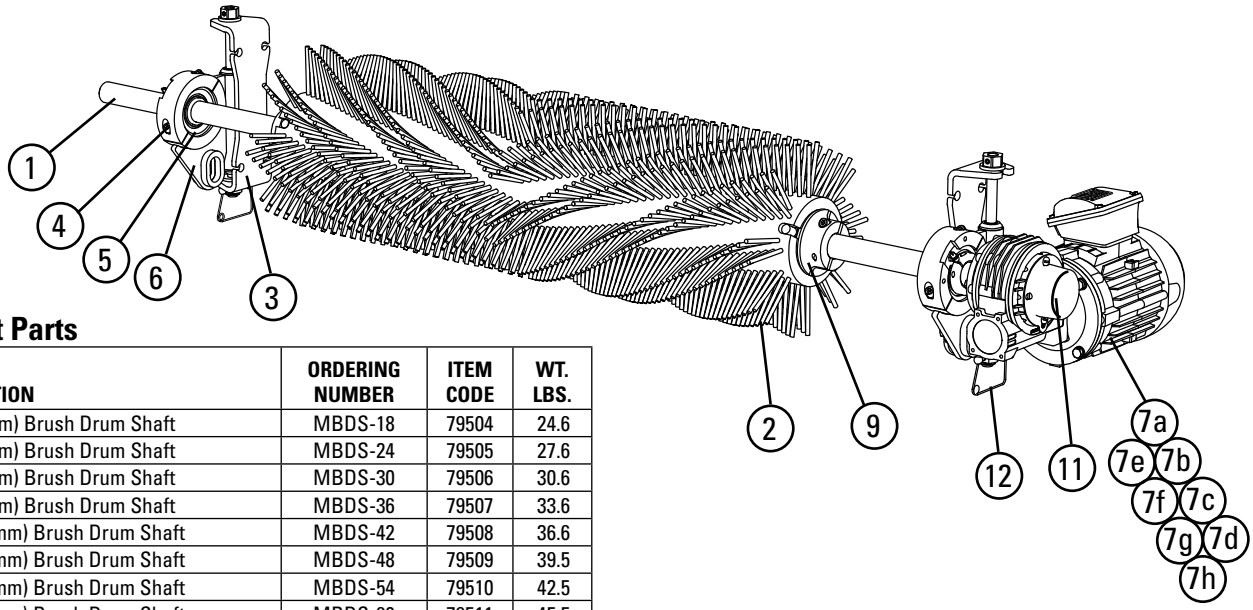

Replacement Parts

REF	DESCRIPTION	ORDERING NUMBER	ITEM CODE	WT. LBS.
1	18" (450mm) Brush Drum Shaft	MBDS-18	79504	24.6
	24" (600mm) Brush Drum Shaft	MBDS-24	79505	27.6
	30" (750mm) Brush Drum Shaft	MBDS-30	79506	30.6
	36" (900mm) Brush Drum Shaft	MBDS-36	79507	33.6
	42" (1050mm) Brush Drum Shaft	MBDS-42	79508	36.6
	48" (1200mm) Brush Drum Shaft	MBDS-48	79509	39.5
	54" (1350mm) Brush Drum Shaft	MBDS-54	79510	42.5
	60" (1500mm) Brush Drum Shaft	MBDS-60	79511	45.5
	72" (1800mm) Brush Drum Shaft	MBDS-72	79512	51.5
	84" (2100mm) Brush Drum Shaft	MBDS-84	79513	57.5
2	18" (450mm) Replacement Brush Drum	MBRD-18	79514	9.6
	24" (600mm) Replacement Brush Drum	MBRD-24	79515	13.5
	30" (750mm) Replacement Brush Drum	MBRD-30	79516	17.1
	36" (900mm) Replacement Brush Drum	MBRD-36	79517	20.5
	42" (1050mm) Replacement Brush Drum	MBRD-42	79518	23.7
	48" (1200mm) Replacement Brush Drum	MBRD-48	79519	26.8
	54" (1350mm) Replacement Brush Drum	MBRD-54	79520	30.7
	60" (1500mm) Replacement Brush Drum	MBRD-60	79521	33.9
	72" (1800mm) Replacement Brush Drum	MBRD-72	79522	41.0
	84" (2100mm) Replacement Brush Drum	MBRD-84	79523	47.5
3	Brush Mounting Base* (1)	MBCMK	79524	4.7
4	Brush Bearing Clamp* (1)	MBCBC	79525	1.9
5	Brush Cleaner Bearings (2)	MBCB	79526	7.2
6	Brush Bearing Mount* (1)	MBCBM	79528	9.7
7a	Gearmotor Assy, 1 HP IP55 for belts up to 42" (1050mm)	MBCM-1	79529	55.0
7b	Gearmotor Assy, 2 HP IP55 for belts 48" (1200mm) and up	MBCM-2	79530	65.0
7c	Gearmotor Assy, 1 HP 575V IP55 for belts up to 36" (900mm)	MBCM-575-1	79924	55.0
7d	Gearmotor Assy, 2 HP 575V IP55 for belts 42" (1050mm) and up	MBCM-575-2	79925	65.0
7e	Gearmotor Assy, 1 HP IP66 for belts up to 42" (1050mm)	MBCM-1-S	91591	55.0
7f	Gearmotor Assy, 2 HP IP66 for belts 48" (1200mm) and up	MBCM-2-S	91592	65.0
7g	Gearmotor Assy, 1 HP 575V IP66 for belts up to 36" (900mm)	MBCM-575-1-S	91593	55.0
7h	Gearmotor Assy, 2 HP 575V IP66 for belts 42" (1050mm) and up	MBCM-575-2-S	91594	65.0
8	Brush Cleaner Torque Arm* (1)	MBCTA	79531	2.5
9	Brush Locks* (2)	MBCBL	79532	9.4
10	Brush Motor Key Kit (1)	MBCMKK	79533	0.3
11	MBC Shaft End Cap* (1)	MBCEC	79534	0.1
12	Tensioner Lock Pins (2)	STLP	79535	0.2
13	Brush Cleaner Drop Brackets* (2)	MBCDBK	79536	28.9
-	Brush Cleaner Adjusting Bracket (1) (incl. bearing and 1 ea. items 3,4,6,&12	MBADB	79527	18.1

*Hardware Included
‡ If brush ordered before January 2021, also order replacement shaft
Lead time: 1 working day

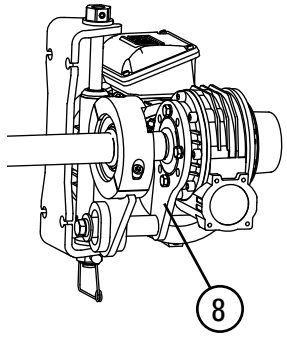

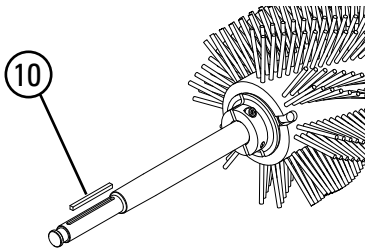

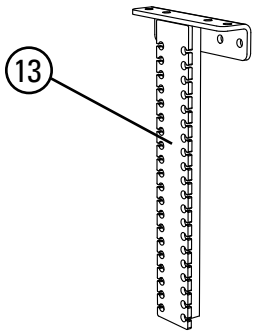

Product Ordering Information

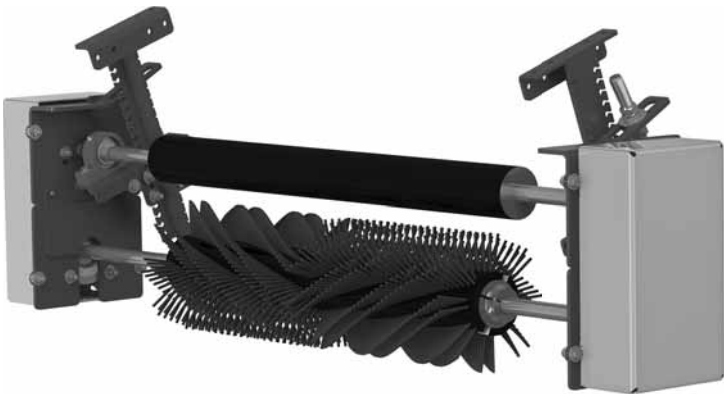

Belt Driven Brush Cleaner

BELT WIDTH		ORDERING NUMBER	ITEM CODE	WT. LBS.
in.	mm			
24	600	BDBC-24	93119	331.7
30	750	BDBC-30	93120	349.1
36	900	BDBC-36	93121	366.2
42	1050	BDBC-42	93122	383.0
48	1200	BDBC-48	93123	400.0
54	1350	BDBC-54	93124	417.5
60	1500	BDBC-60	93125	434.4
72	1800	BDBC-72	93126	468.9

Lead time: 1 working day

Replacement Brushes

BELT WIDTH		ORDERING NUMBER	ITEM CODE	WT. LBS.
in.	mm			
24	600	MBRD-24	79515	13.5
30	750	MBRD-30	79516	17.1
36	900	MBRD-36	79517	20.5
42	1050	MBRD-42	79518	23.7
48	1200	MBRD-48	79519	26.8
54	1350	MBRD-54	79520	30.7
60	1500	MBRD-60	79521	33.9
72	1800	MBRD-72	79522	41

Lead time: 1 working day

Optional Mounting Brackets (Pair)

DESCRIPTION	ORDERING NUMBER	ITEM CODE	WT. LBS.
Drop Bracket Kit (incl. 2)	MBCDBK	79536	28.9

Lead time: 1 working day

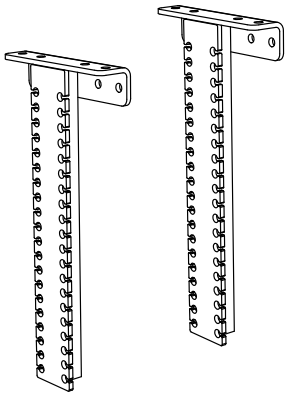

Specifications & Guidelines

Specifications

Belt Speed	Up to 700 fpm (3.5 m/s)
Vertical Clearance	24.5" (622mm)
Horizontal Clearance	28.38" (720mm)
Temperature Range	-20ºF to 180ºF (-30ºC to 82ºC)
Maximum Chevron or Cleat Height	1/2" (13mm)
Bristle Length	3-1/4" (83mm)
Overall Diameter	12" (305mm)
Shaft Length (Brush and Roller)	Belt Width plus 42" (1067mm)
Shaft Diameter	1" (25mm)
CEMA Cleaner Rating	Class 4

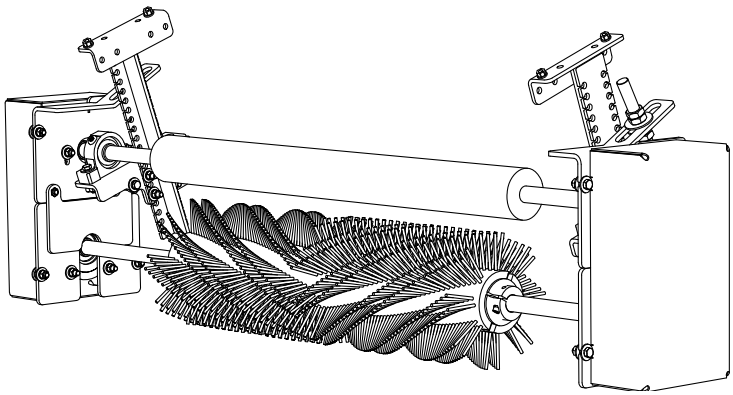

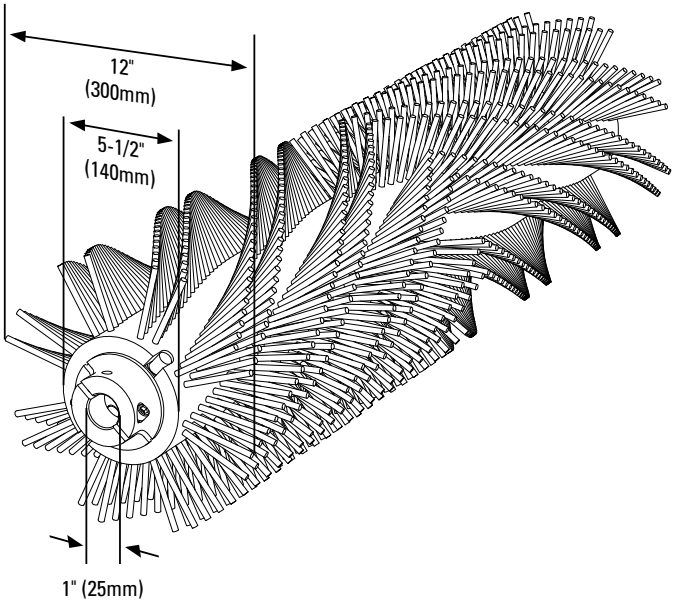

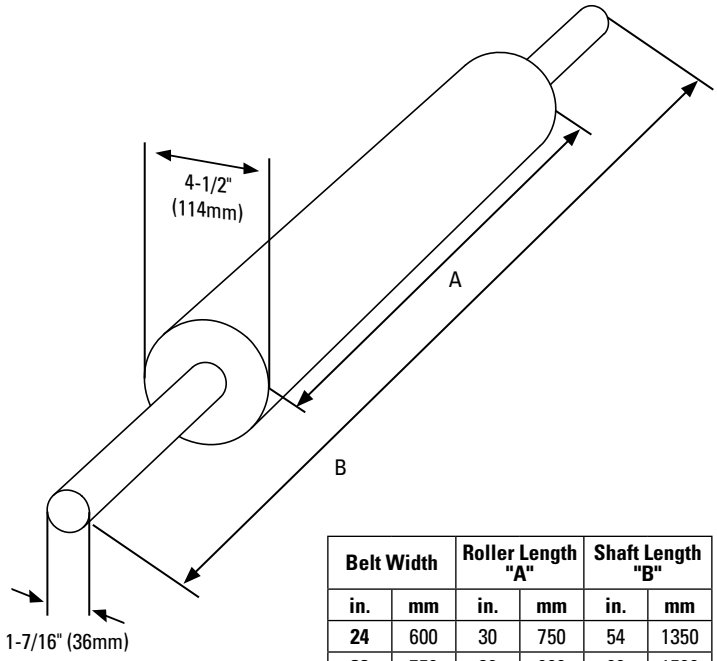

Belt Width		Roller Length "A"		Shaft Length "B"	
in.	**mm**	**in.**	**mm**	**in.**	**mm**
24	600	30	750	54	1350
30	750	36	900	60	1500
36	900	42	1050	66	1650
42	1050	48	1200	72	1800
48	1200	54	1350	78	1950
54	1350	60	1500	84	2100
60	1500	66	1650	90	2250
72	1800	78	1950	102	2550

Replacement Parts

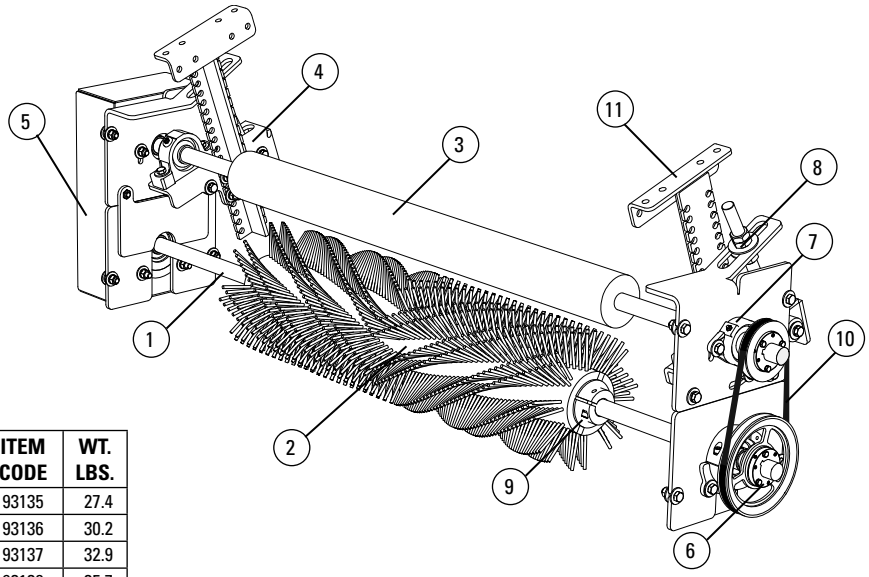

Replacement Parts

REF	DESCRIPTION	ORDERING NUMBER	ITEM CODE	WT. LBS.
1	18" (450mm) Brush Drum Shaft	BDBCR-BS-24	93135	27.4
	24" (600mm) Brush Drum Shaft	BDBCR-BS-30	93136	30.2
	30" (750mm) Brush Drum Shaft	BDBCR-BS-36	93137	32.9
	36" (900mm) Brush Drum Shaft	BDBCR-BS-42	93138	35.7
	42" (1050mm) Brush Drum Shaft	BDBCR-BS-48	93139	38.4
	48" (1200mm) Brush Drum Shaft	BDBCR-BS-54	93140	41.2
	54" (1350mm) Brush Drum Shaft	BDBCR-BS-60	93141	43.9
	60" (1500mm) Brush Drum Shaft	BDBCR-BS-72	93142	46.6
2	24" (600mm) Replacement Brush Drum	MBRD-24	79515	13.5
	30" (750mm) Replacement Brush Drum	MBRD-30	79516	17.1
	36" (900mm) Replacement Brush Drum	MBRD-36	79517	20.5
	42" (1050mm) Replacement Brush Drum	MBRD-42	79518	23.7
	48" (1200mm) Replacement Brush Drum	MBRD-48	79519	26.8
	54" (1350mm) Replacement Brush Drum	MBRD-54	79520	30.7
	60" (1500mm) Replacement Brush Drum	MBRD-60	79521	33.9
	72" (1800mm) Replacement Brush Drum	MBRD-72	79522	41.0
3	24" (600mm) Replacement Roller	BDBCR-HDR-24	93127	79.5
	30" (750mm) Replacement Roller	BDBCR-HDR-30	93128	91.0
	36" (900mm) Replacement Roller	BDBCR-HDR-36	93129	102.6
	42" (1050mm) Replacement Roller	BDBCR-HDR-42	93130	113.3
	48" (1200mm) Replacement Roller	BDBCR-HDR-48	93131	124.7
	54" (1350mm) Replacement Roller	BDBCR-HDR-54	93132	136.2
	60" (1500mm) Replacement Roller	BDBCR-HDR-60	93133	147.6
	72" (1800mm) Replacement Roller	BDBCR-HDR-72	93134	170.5
4	Support Spacer Kit	BDBDR-SPACER	93370	1.7
5	Drive Guard Kit	BDBDR-GUARD	93371	20.6
6	Brush Shaft Bearing/Drive Hardware	BDBCR-B-HW	93372	8.0
7	Roller Shaft Bearing/Drive Hardware	BDBCR-R-HW	93373	23.3
8	Adjustment Arm Kit	BDBCR-ADJARM	93374	8.5
9	Brush Lock Kit	BDBCR-BL	93375	1.5
10	Replacment V-Belt	BDBCR-VBELT	93376	0.3
11	Brush Cleaner Drop Brackets* (2)	MBCDBK	79536	28.9

*Hardware included.

Product Ordering Information

Chevron Belt Cleaner

BELT WIDTH		DRUM WIDTH		ORDERING NUMBER	ITEM CODE	WT. LBS.
in.	mm	in.	mm			
18	450	18	450	CBC18	76668	74.0
24	600	24	600	CBC24	76669	81.9
30	750	30	750	CBC30	76670	90.8
36	900	36	900	CBC36	76671	99.7
42	1050	42	1050	CBC42	76672	107.5
48	1200	48	1200	CBC48	76673	116.5
54	1350	54	1350	CBC54	76674	124.3
60	1500	60	1500	CBC60	76675	133.2
72	1800	72	1800	CBC72	90762	150.0
84	2100	84	2100	CBC84	90763	166.8

Lead time: 1 working day
Shaded items are made to order.
Lead time: 3 working days

Replacement Parts

REF	DESCRIPTION	ORDERING NUMBER	ITEM CODE	WT. LBS.
1	18" (450mm) Drum Shaft	CBCS18	90537	15.1
	24" (600mm) Drum Shaft	CBCS24	90538	17.0
	30" (750mm) Drum Shaft	CBCS30	90539	18.9
	36" (900mm) Drum Shaft	CBCS36	90540	20.8
	42" (1050mm) Drum Shaft	CBCS42	90541	22.7
	48" (1200mm) Drum Shaft	CBCS48	90542	24.6
	54" (1350mm) Drum Shaft	CBCS54	90543	26.4
	60" (1500mm) Drum Shaft	CBCS60	90544	28.3
	72" (1800mm) Drum Shaft	CBCS72	90554	33.9
	84" (2100mm) Drum Shaft	CBCS84	90555	39.6
2	Chevron Pillow Block*	CPB	76692	1.2
3	18" (450mm) Repl Drum w/Fingers*	CRDF18	90631	25.0
	24" (600mm) Repl Drum w/Fingers*	CRDF24	90632	31.0
	30" (750mm) Repl Drum w/Fingers*	CRDF30	90633	38.0
	36" (900mm) Repl Drum w/Fingers*	CRDF36	90634	45.0
	42" (1050mm) Repl Drum w/Fingers*	CRDF42	90635	51.0
	48" (1200mm) Repl Drum w/Fingers*	CRDF48	90636	58.0
	54" (1350mm) Repl Drum w/Fingers*	CRDF54	90637	64.0
	60" (1500mm) Repl Drum w/Fingers*	CRDF60	90638	71.0
	72" (1800mm) Repl Drum w/Fingers*	CRDF72	90639	84.0
	84" (2100mm) Repl Drum w/Fingers*	CRDF84	90640	97.0
4	3" (75mm) Replacement Finger Ring	CBC3R	90641	2.5
5	Mounting Bracket Kit (1 Right and 1 Left)	EZS2MBK	75666	13.0
6	Adjusting Bracket Kit* (1 ea.)	PAB	75513	1.5

*Hardware Included
Lead time: 1 working day
Shaded items are made to order.
Lead time: 3 working days

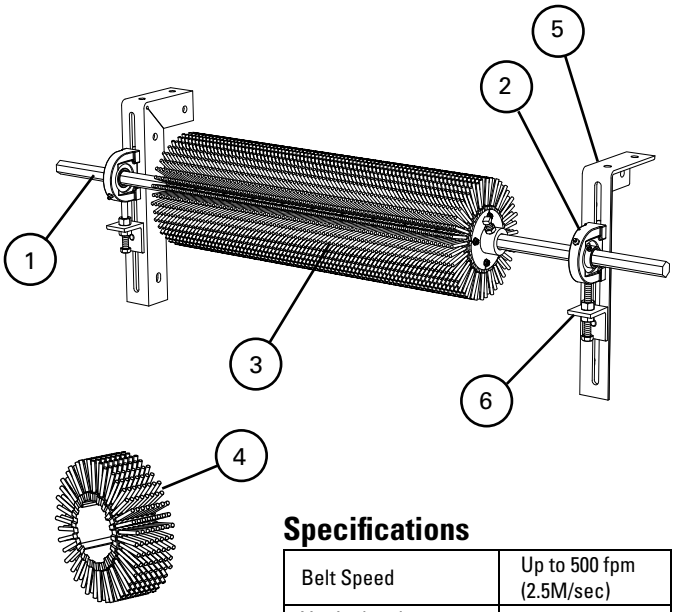

Specifications

Belt Speed	Up to 500 fpm (2.5M/sec)
Vertical and Horizontal Clearance	10" (250mm)
Temperature Range	-30°F to 180°F (-35°C to 82°C)
Maximum Chevron or Cleat Height	1" (25mm)
Finger Length	2" (50mm)
Rubber Durometer	45A
Overall Diameter	9-1/2" (238mm)
Shaft Length	Belt Width plus 30" (750mm)
Shaft	1" (25mm) Hex
CEMA Cleaner Rating	Class 3

Product Notes:

- Free-rotating. Works only when the belt is running.
- Self-cleaning. Finger length, spacing and the rotary action allows carryback to fall free instead of clogging.
- Easy to install. Few parts and step-by-step instructions make the job simple.
- Long-wearing SBR rubber. Drum life ranges from 1 to 3 years depending upon the application conditions and the material being conveyed.
- Works on reversing belts.
- Finger rings can be replaced individually or all at once by replacing the drum.

Product Ordering Information

Continuous Blade Secondary Cleaners with SST XD Tensioners

BELT WIDTH		ORDERING	ITEM	WT.
in.	mm	NUMBER	CODE	LBS.
18	450	CBS18SF	79936	154.0
24	600	CBS24SF	79937	168.0
30	750	CBS30SF	79938	182.0
36	900	CBS36SF	79939	196.0
42	1050	CBS42SF	79940	210.0
48	1200	CBS48SF	79941	224.0
54	1350	CBS54SF	79942	238.0
60	1500	CBS60SF	79943	252.0
72	1800	CBS72SF	79944	280.0
84	2100	CBS84SF	79945	308.0
96	2400	CBS96SF	79946	336.0

Lead time: 1 day; shaded items 3 weeks

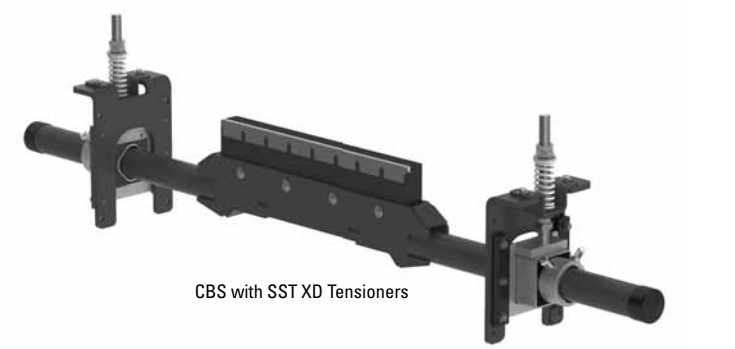

CBS with SST XD Tensioners

Continuous Blade Secondary Cleaners with SAT XD Tensioners

BELT WIDTH		ORDERING	ITEM	WT.
in.	mm	NUMBER	CODE	LBS.
18	450	CBS18PF	79958	135.5
24	600	CBS24PF	79959	149.5
30	750	CBS30PF	79960	163.5
36	900	CBS36PF	79961	177.5
42	1050	CBS42PF	79962	191.5
48	1200	CBS48PF	79963	205.5
54	1350	CBS54PF	79964	219.5
60	1500	CBS60PF	79965	233.5
72	1800	CBS72PF	79966	261.5
84	2100	CBS84PF	79967	289.5
96	2400	CBS96PF	79968	317.5

*Includes control box

Lead time: 1 day; shaded items 3 weeks

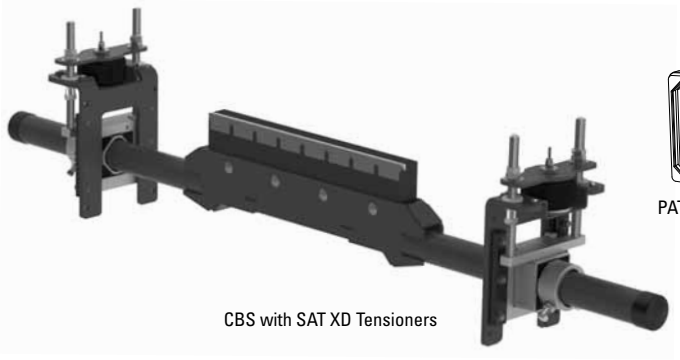

CBS with SAT XD Tensioners

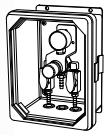

PAT Control Box

Replacement Blades for Continuous Blade Secondary Cleaners

BELT WIDTH		ORDERING	ITEM	WT.
in.	mm	NUMBER	CODE	LBS.
18	450	CBSBLD18F	79947	16.0
24	600	CBSBLD24F	79948	22.0
30	750	CBSBLD30F	79949	27.0
36	900	CBSBLD36F	79950	33.0
42	1050	CBSBLD42F	79951	39.0
48	1200	CBSBLD48F	79952	45.0
54	1350	CBSBLD54F	79953	50.0
60	1500	CBSBLD60F	79954	56.0
72	1800	CBSBLD72F	79955	67.0
84	2100	CBSBLD84F	79956	79.0
96	2400	CBSBLD96F	79957	90.0

Lead time: 1 day; shaded items 3 weeks

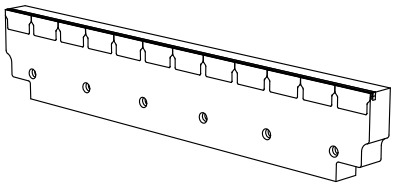

CBS Flat Replacement Blade

Product Notes:

- Heavy-duty design to deliver maximum cleaning efficiency on the most demanding, abusive beltlines.
- Pole Length: Belt width plus 54" (1350mm). For longer requirements, see Mineline Installation Accessories – Pole Extender Kit (page 155).
- To make cleaner installation easier and quicker, see Optional Mounting Kits (page 155).
- It is recommended that mechanical fasteners on the belt be skived.

Specifications and Guidelines

Pole Length Specifications*

CLEANER SIZE		BLADE WIDTH		POLE LENGTH		MAXIMUM CONVEYOR SPAN	
in.	mm	in.	mm	in.	mm	in.	mm
18	450	18	450	72	1800	62	1550
24	600	24	600	78	1950	68	1700
30	750	30	750	84	2100	74	1850
36	900	36	900	90	2250	80	2000
42	1050	42	1050	96	2400	86	2150
48	1200	48	1200	102	2550	92	2300
54	1350	54	1350	108	2700	98	2450
60	1500	60	1500	114	2850	104	2600
72	1800	72	1800	126	3150	116	2900
84	2100	84	2100	138	3450	128	3200
96	2400	96	2400	150	3750	140	3500

*For special extra long pole length requirements a Pole Extender Kit (#76024) is available that provides 30" (750mm) of extended pole length. See Page 155.
Pole Diameter - 2-7/8" (73mm)

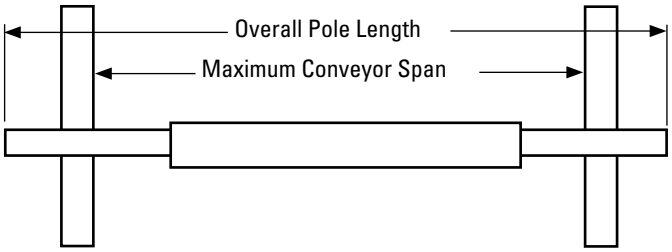

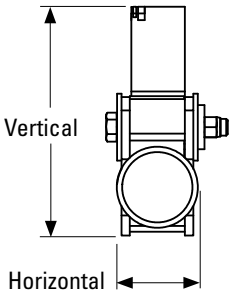

Clearance Guidelines for Installation

HORIZONTAL CLEARANCE REQUIRED		VERTICAL CLEARANCE REQUIRED	
in.	mm	in.	mm
4-1/2	115	9	229

SST XD Tensioner Spring Length Chart

Blade Width		White Spring		Silver Spring		Black Spring		Gold Spring	
in.	mm	in.	mm	in.	mm	in.	mm	in.	mm
18	450	3 3/8	86	4	102	N/A	N/A	N/A	N/A
24	600	3 1/8	79	3 7/8	98	N/A	N/A	N/A	N/A
30	750	2 7/8	73	3 3/4	95	N/A	N/A	N/A	N/A
36	900	N/A	N/A	3 3/4	95	3 7/8	98	N/A	N/A
42	1050	N/A	N/A	3 5/8	92	3 3/4	95	N/A	N/A
48	1200	N/A	N/A	3 1/2	89	3 5/8	92	N/A	N/A
54	1350	N/A	N/A	3 3/8	86	3 5/8	92	3 3/4	95
60	1500	N/A	N/A	3 1/4	83	3 1/2	89	3 3/4	95
72	1800	N/A	N/A	N/A	N/A	3 3/8	86	3 5/8	92
84	2100	N/A	N/A	N/A	N/A	3 1/8	79	3 1/2	89
96	2400	N/A	N/A	N/A	N/A	N/A	N/A	3 3/8	86

Shading indicates preferred spring option. Measure spring as shown below.

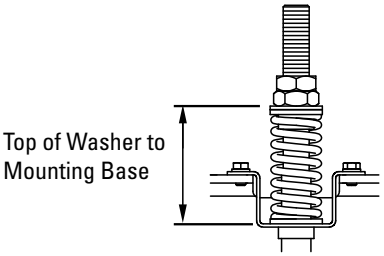

SAT XD Tensioner Pressure Chart

Blade Width		Blades	Pressure	
in.	mm		psi	kPa
18	450	3	15#	103
24	600	4	19#	131
30	750	5	23#	159
36	900	6	27#	186
42	1050	7	31#	214
48	1200	8	35#	241
54	1350	9	39#	269
60	1500	10	43#	296
72	1800	12	51#	352
84	2100	14	59#	407
96	2400	16	67#	462

Specifications:

- Maximum Belt Speed .....800 FPM (4M/sec)
- Temperature Rating .....-30°F to 180°F (-35°C to 82°C)
- Available for Belt Widths .....18" to 96" (450 to 2400mm). Other sizes available upon request.

Replacement Parts

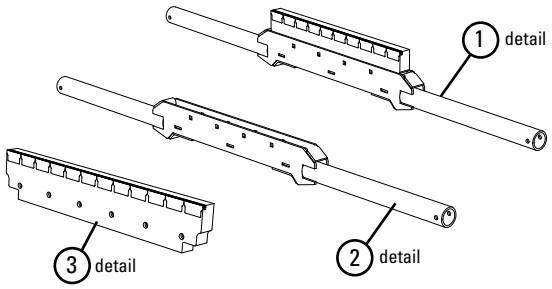

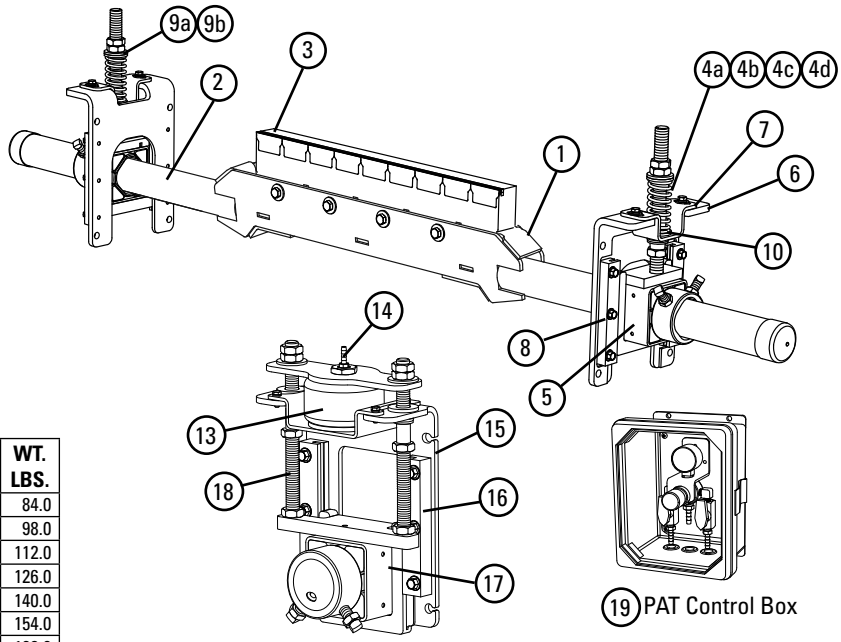

11 Secondary Air Tensioner XD with Control Box
12 Secondary Air Tensioner XD w/o Control Box

Replacement Parts

REF	DESCRIPTION	ORDERING NUMBER	ITEM CODE	WT. LBS.
1	18" (450mm) CBS Blade/Pole Flat	CBSBP18F	90101	84.0
	24" (600mm) CBS Blade/Pole Flat	CBSBP24F	90102	98.0
	30" (750mm) CBS Blade/Pole Flat	CBSBP30F	90103	112.0
	36" (900mm) CBS Blade/Pole Flat	CBSBP36F	90104	126.0
	42" (1050mm) CBS Blade/Pole Flat	CBSBP42F	90105	140.0
	48" (1200mm) CBS Blade/Pole Flat	CBSBP48F	90106	154.0
	54" (1350mm) CBS Blade/Pole Flat	CBSBP54F	90107	168.0
	60" (1500mm) CBS Blade/Pole Flat	CBSBP60F	90108	182.0
	72" (1800mm) CBS Blade/Pole Flat	CBSBP72F	90109	210.0
	84" (2100mm) CBS Blade/Pole Flat	CBSBP84F	90110	238.0
	96" (2400mm) CBS Blade/Pole Flat	CBSBP96F	90111	266.0
2	18" (450mm) CBS Repl Pole	CBSP18	91432	68.0
	24" (600mm) CBS Repl Pole	CBSP24	91433	76.0
	30" (750mm) CBS Repl Pole	CBSP30	91434	85.0
	36" (900mm) CBS Repl Pole	CBSP36	91435	93.0
	42" (1050mm) CBS Repl Pole	CBSP42	91436	101.0
	48" (1200mm) CBS Repl Pole	CBSP48	91437	109.0
	54" (1350mm) CBS Repl Pole	CBSP54	91438	118.0
	60" (1500mm) CBS Repl Pole	CBSP60	91439	126.0
	72" (1800mm) CBS Repl Pole	CBSP72	91440	143.0
	84" (2100mm) CBS Repl Pole	CBSP84	91441	159.0
	96" (2400mm) CBS Repl Pole	CBSP96	91442	176.0
3	18" (450mm) CBS Blade Flat	CBSBLD18F	79947	16.0
	24" (600mm) CBS Blade Flat	CBSBLD24F	79948	22.0
	30" (750mm) CBS Blade Flat	CBSBLD30F	79949	27.0
	36" (900mm) CBS Blade Flat	CBSBLD36F	79950	33.0
	42" (1050mm) CBS Blade Flat	CBSBLD42F	79951	39.0
	48" (1200mm) CBS Blade Flat	CBSBLD48F	79952	45.0
	54" (1350mm) CBS Blade Flat	CBSBLD54F	79953	50.0
	60" (1500mm) CBS Blade Flat	CBSBLD60F	79954	56.0
	72" (1800mm) CBS Blade Flat	CBSBLD72F	79955	67.0
	84" (2100mm) CBS Blade Flat	CBSBLD84F	79956	79.0
	96" (2400mm) CBS Blade Flat	CBSBLD96F	79957	90.0
4a	Tension Spring - White (1 ea.) for belts 18" - 30" (450-750mm)	STS-W	75846	0.5
4b	Tension Spring - Silver (1 ea.) for belts 36" - 48" (900-1200mm)	STS-S	75843	0.8
4c	Tension Spring - Black (1 ea.) for belts 54" - 84" (1350-2100mm)	STS-B	75844	1.0
4d	Tension Spring - Gold (1 ea.) for belts 96" (2400mm)	STS-G	78142	1.3
5	HD Torsion Pole Mount* (1 ea.) (includes HD adjusting rod, nuts & sleeve) (See 9 & 9a for bushings)	SSTHDPM	77868	15.0
6	SST XD Mounting Base Kit* (includes 1 mounting base, 2 slide guides, top hat bracket & bottom bushing)	SSTXDMK	91412	10.2
7	SST Hat Bracket (pair)	SSTHB	79582	3.0
8	Slide Guide Kit* (incl. 2 slide guides)	STGK2	77867	1.1
9a	SST Bushing Kit - White/Silver (includes 2 bushings)	SSTBK-W	76636	0.1
9b	SST Bushing Kit - Black/Gold (includes 2 bushings)	SSTBK-B	76637	0.1
10	SST Lower Bushing Kit (pair)	SSTLBK	79493	.2

*Hardware Included
Lead time: 1 day; shaded items 3 weeks

SAT XD (Secondary Air Tensioner XD) Replacement Parts

REF	DESCRIPTION	ORDERING NUMBER	ITEM CODE	WT. LBS.
11	SAT XD w/PAT Control Box	SATXDPAT	91413	43.5
12	SAT XD w/o Control Box	SATXDNCB	91414	41.0
13	SAT Air/Water Bag Kit	SATB	76083	5.1
14	SAT 1/8" Hose Barb Kit	SATHB	76084	0.1
15	SAT XD Mounting Base Kit	SAT2MK	91415	11.6
16	ST Slide Guide Kit	STGK2	77867	1.1
17	SAT2 Torsion Pole Mount	SAT2PM	78732	11.1
18	SAT2 Adjusting Rod Kit	SAT2AK	78733	5.0
19	PAT Control Box 100psi	PACB100	79656	11.0

Lead time: 1 working day

SST XD (Secondary Spring Tensioner XD) Options

REF	DESCRIPTION	ORDERING NUMBER	ITEM CODE	WT. LBS.
–	SST XD Spring Tensioner* - White (includes 2 each items 4a, 5, 6, & 9a) for belts 18" - 30" (450-750mm)	SSTXD-W	91408	60.6
–	SST XD Spring Tensioner* - Silver (includes 2 each items 4b, 5, 6, & 9a) for belts 36" - 48" (900-1200mm)	SSTXD-S	91409	61.4
–	SST XD Spring Tensioner* - Black (includes 2 each items 4c, 5, 6, & 9b) for belts 54" - 84" (1350-2100mm)	SSTXD-B	91410	62.0
–	SST XD Spring Tensioner* - Gold (includes 2 each items 4d, 5, 6, & 9b) for belts 96" (2400mm)	SSTXD-G	91411	62.6

Spring Tensioner Selection Chart

CLEANER SIZE	91408 SSTXD-W	91409 SSTXD-S	91410 SSTXD-B	91411 SSTXD-G
CBS 18" - 30" (450 - 750mm)	X			
CBS 36" - 48" (900 - 1200mm)		X		
CBS 54" - 84" (1350 - 2100mm)			X	
CBS 96" (2400mm)				X

Product Ordering Information

Flexco Retrofit Replacement Blades
for Richwood® 1C Cleaner

Richwood® is a registered trademark of Richwood Industries, Inc.
The replacement parts described herein are designed and made by Flexco.
Flexco is not affiliated with or authorized by Richwood.

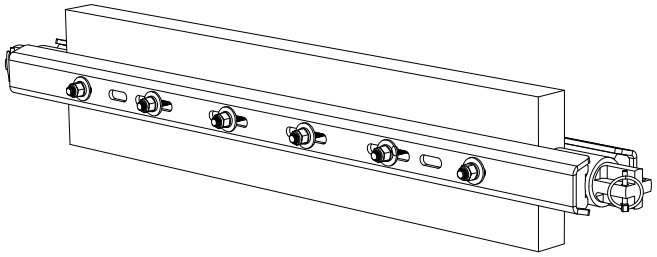

Flexco Retrofit Blade/Holder for 1C Cleaner Belt Width Minus 6" (150mm)

BELT WIDTH		BLADE WIDTH		ORDERING NUMBER	ITEM CODE	WT. LBS.
in.	mm	in.	mm			
24	600	18	450	RWPREC-624	90068	37.7
30	750	24	600	RWPREC-630	90069	48.9
36	900	30	750	RWPREC-636	90070	54.4
42	1050	36	900	RWPREC-642	90071	62.6
48	1200	42	1050	RWPREC-648	90072	71.1
54	1350	48	1200	RWPREC-654	90073	79.3
60	1500	54	1350	RWPREC-660	90074	87.7
72	1800	66	1650	RWPREC-672	90075	104.4
84	2100	78	1950	RWPREC-684	90076	121.1
96	2400	90	2250	RWPREC-696	90077	137.8

Lead time: 1 working day

Flexco Retrofit Blade/Holder for 1C Cleaner Belt Width Minus 12" (300mm)

BELT WIDTH		BLADE WIDTH		ORDERING NUMBER	ITEM CODE	WT. LBS.
in.	mm	in.	mm			
30	750	18	450	RWPREC-1230	90078	40.9
36	900	24	600	RWPREC-1236	90079	50.1
42	1050	30	750	RWPREC-1242	90080	57.6
48	1200	36	900	RWPREC-1248	90081	66.8
54	1350	42	1050	RWPREC-1254	90082	74.3
60	1500	48	1200	RWPREC-1260	90083	83.5
72	1800	60	1500	RWPREC-1272	90084	100.2
84	2100	72	1800	RWPREC-1284	90085	116.9
96	2400	84	2100	RWPREC-1296	90086	133.6

Lead time: 1 working day

Flexco Retrofit Blade/Holder for 1C Cleaner Belt Width Minus 18" (450mm)

BELT WIDTH		BLADE WIDTH		ORDERING NUMBER	ITEM CODE	WT. LBS.
in.	mm	in.	mm			
36	900	18	450	RWPREC-1836	91214	45.1
42	1050	24	600	RWPREC-1842	91215	53.3
48	1200	30	750	RWPREC-1848	91216	61.8
54	1350	36	900	RWPREC-1854	91217	70.0
60	1500	42	1050	RWPREC-1860	91218	78.5
72	1800	54	1350	RWPREC-1872	91219	95.2
84	2100	66	1650	RWPREC-1884	91220	111.9
96	2400	78	1950	RWPREC-1896	91221	128.6

Lead time: 1 working day

Shaded items are made to order.
Lead time: 10 working days

Match blade width to belt's material path

Belt Width Minus 6" (150mm)

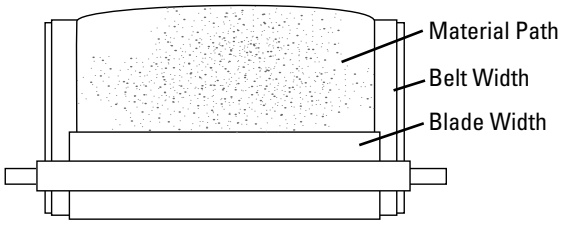

Belt Width Minus 12" (300mm)

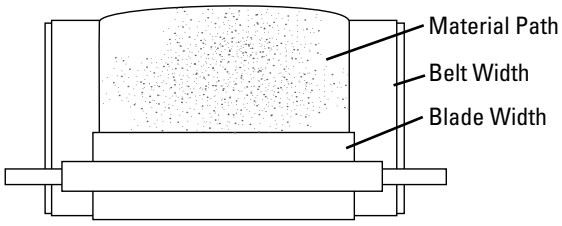

Belt Width Minus 18" (450mm)

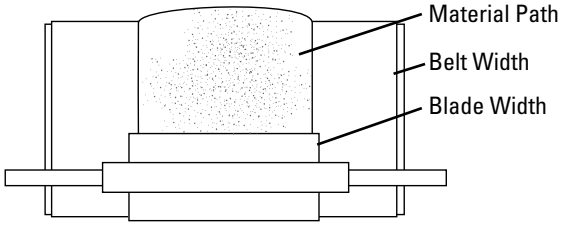

Product Notes:

- For optimal cleaning and reduced blade retensioning maintenance, the cleaner blade width should be sized to fit the material path of the belt. The material path is typically 2/3 of the belt width. In most cases a blade size of belt width minus 12” (300 mm) may be the best selection.
- Each cleaner can be retrofitted with multiple standard replacement blade sizes belt width minus 6” (150 mm), minus 12” (300 mm), and minus 18” (450 mm), and provides additional options for custom-fit material paths.
- Blades can be worn until 1/4” (6 mm) above the blade holder, then rotated 180° for a second blade wear area.
- Works with mechanical or vulcanized splices.
- Replacement blades with this design are simple and easy – no longer do you need to purchase an entire blade/pole assembly to replace the blade.

Product Ordering Information

Flexco Retrofit Replacement Blades
for Richwood® 1C Cleaner

Richwood® is a registered trademark of Richwood Industries, Inc.
The replacement parts described herein are designed and made by Flexco.
Flexco is not affiliated with or authorized by Richwood.

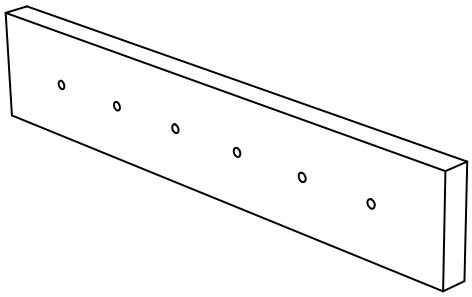

Flexco Retrofit Blades for 1C Cleaner

BLADE WIDTH		ORDERING NUMBER	ITEM CODE	WT. LBS.
in.	mm			
18	450	RWPBLD-18	90087	12.7
24	600	RWPBLD-24	90088	16.9
30	750	RWPBLD-30	90089	21.1
36	900	RWPBLD-36	90090	25.3
42	1050	RWPBLD-42	90091	29.6
48	1200	RWPBLD-48	90092	33.8
54	1350	RWPBLD-54	90093	38.0
60	1500	RWPBLD-60	90094	42.2
66	1650	RWPBLD-66	90095	46.5
72	1800	RWPBLD-72	90096	50.7
78	1950	RWPBLD-78	90097	54.9
84	2100	RWPBLD-84	90098	59.1
90	2250	RWPBLD-90	90099	63.4

*Hardware included
Lead time: 1 working day

Shaded items are made to order.
Lead time: 10 working days

Product Ordering Information

Flexco Retrofit Replacement Blades
for Richwood® 1C-ICT Cleaner

Richwood® is a registered trademark of Richwood Industries, Inc.
The replacement parts described herein are designed and made by Flexco.
Flexco is not affiliated with or authorized by Richwood.

Flexco Retrofit Blade/Holder for 1C-ITC Cleaner

BELT WIDTH		ORDERING NUMBER	ITEM CODE	WT. LBS.
in.	mm			
18	450	RWSECS-18F	91417	42.0
24	600	RWSECS-24F	91418	53.0
30	750	RWSECS-30F	91419	64.0
36	900	RWSECS-36F	91420	76.0
42	1050	RWSECS-42F	91421	86.0
48	1200	RWSECS-48F	91422	97.0
54	1350	RWSECS-54F	91423	108.0
60	1500	RWSECS-60F	91424	120.0
72	1800	RWSECS-72F	91425	141.0
84	2100	RWSECS-84F	91426	163.0
96	2400	RWSECS-96F	91427	185.0

Lead Time: 1 working day

Shaded items are made to order.
Lead time: 3 weeks

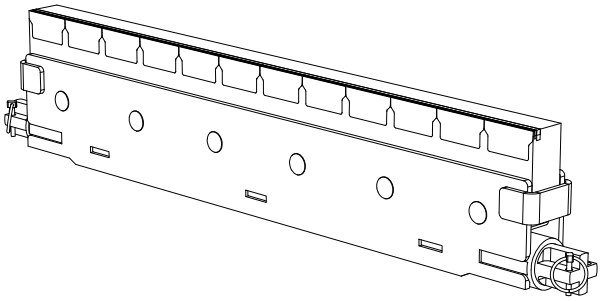

Flexco Retrofit Blade for 1C-ITC Cleaner

BELT WIDTH		ORDERING NUMBER	ITEM CODE	WT. LBS.
in.	mm			
18	450	CBSBLD18F	79947	16.0
24	600	CBSBLD24F	79948	22.0
30	750	CBSBLD30F	79949	27.0
36	900	CBSBLD36F	79950	33.0
42	1050	CBSBLD42F	79951	39.0
48	1200	CBSBLD48F	79952	45.0
54	1350	CBSBLD54F	79953	50.0
60	1500	CBSBLD60F	79954	56.0
72	1800	CBSBLD72F	79955	67.0
84	2100	CBSBLD84F	79956	79.0
96	2400	CBSBLD96F	79957	90.0

Lead Time: 1 working day

Shaded items are made to order.
Lead time: 3 weeks

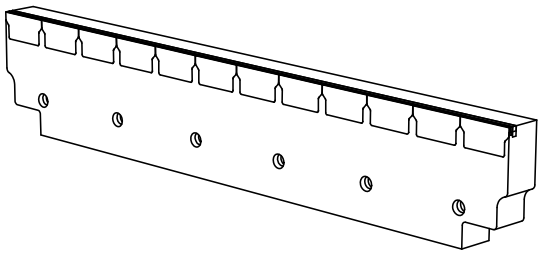

Product Notes:

- Works with mechanical or vulcanized splices.
- Replacement blades with this design are simple and easy – no longer do you need to purchase an entire blade/pole assembly to replace the blade.

Optional Mounting Kits

OPTIONAL MOUNTING KITS FOR BELT CLEANERS

Versatile, adjustable brackets and plates that can be mounted on the conveyor structure so precleaners and secondary cleaners can be easily and quickly bolted into place.

75830
Optional Mounting Bar Kit
(with bolts, nuts and washers)
- For mounting precleaners on open head pulleys.
- Weld on both sides of pulley and bolt on steel plates.
- For use with MSP, MMP, MHP, MHCP

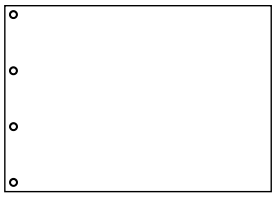

76537
Mounting Plate Kit (incl. 2 plates, 16" x 32" (400 x 800 mm))
- For use with Mounting Bars to mount cleaners on open head pulleys.
- For use with MSP, MMP, MHP, MHCP

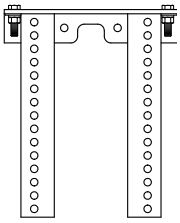

76071
Standard Mounting Bracket Kit
- For MHS/MDWS secondary cleaner installs.

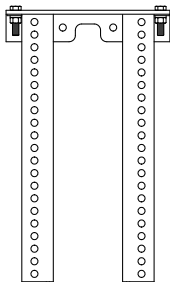

76072
Long Mounting Bracket Kit
- For installations that require extra length legs.

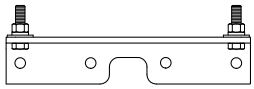

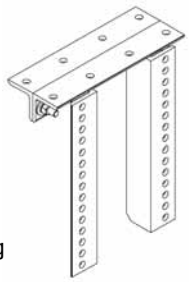

76073
Optional Top Angle Kit
- Used with both standard and long mounting bracket kits for additional mounting options.

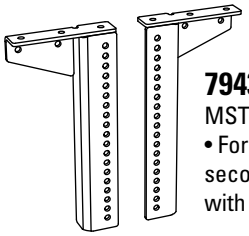

79434
MST Drop Bracket Kit
- For installs of secondary cleaners with MST tensioners.

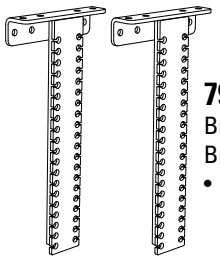

79536
Brush Cleaner Drop Bracket Kit
- For brush cleaner installations that require extra length legs.

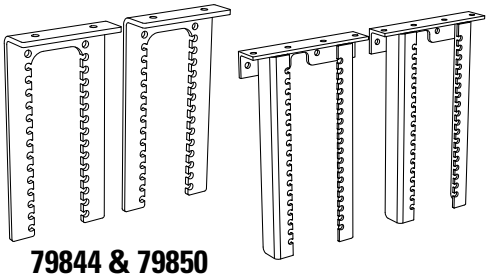

79844 & 79850
Y-Type SD & HD Drop Bracket Kits
- For Y-Type cleaner installations that require extra length legs.

Optional Mounting Kits

(includes 2 brackets/bars)

DESCRIPTION	ORDERING NUMBER	ITEM CODE	WT. LBS.
Standard Mounting Bracket Kit *	SSTSMB	76071	34.3
Long Mounting Bracket Kit *	SSTLMB	76072	43.5
Optional Top Angle Kit *	SSTOTA	76073	10.5
Optional Mounting Bar Kit *	MMBK	75830	19.5
Mounting Plate Kit (incl. 2 plates)	MMPK	76537	140.0
MST Drop Brackets (2)	MSTDB	79434	27.7
Brush Cleaner Drop Brackets (2)	MBCDBK	79536	28.9
Y-Type Standard Duty Drop Brackets (2)	YSTDBK	79844	19.7
Y-Type Heavy Duty Drop Brackets (2)	YSTHDDBK	79850	32.1

*Hardware Included
Lead time: 1 working day

Specs and Notes:

- Standard brackets are 13" W x 15-1/2" L (330x394mm).
- Long brackets are 13" W x 21-1/2" L (330x546mm).
- Mounting bars are 1-1/2" W x 16" L (38x400mm) with (4) 5/8-11 tapped holes.
- Mounting plates are 16" W x 32" L (400x800mm) with (4) 5/8" (16mm) holes.

Pole Extender Kit

(includes 2 pole extenders)

DESCRIPTION	ORDERING NUMBER	ITEM CODE	WT. LBS.
2-7/8" (73mm) Pole Extender Kit	MAPEK	76024	21.9
2-3/8" (60mm) Pole Extender Kit	RAPEK	77423	18.0

Provides 30" (750mm) of extended pole length.
Lead time: 1 working day

77423
2-3/8" Pole Extender Kit

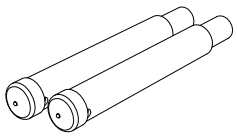

76024
2-7/8" Pole Extender Kit

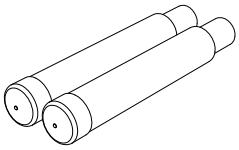

Spring Covers

ORDERING NUMBER	ITEM CODE	WT. LBS.
SPG-CVR-A	77387	0.3
SPG-CVR-B	77388	0.3
SPG-CVR-C	77389	0.3
SPG-CVR-D	77390	0.4
SPG-CVR-E	77391	0.4
SPG-CVR-F	77392	0.3
SPG-CVR-G	77393	0.3
SPG-CVR-H	77741	0.3

Includes 1 spring cover
Lead time: 1 working day

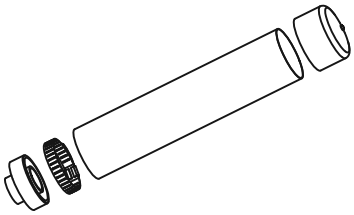

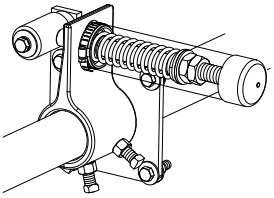

Spring cover on Precleaner tensioner

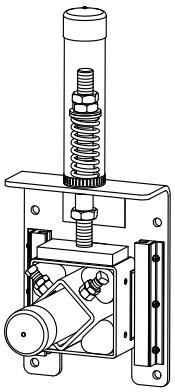

Spring cover on Secondary cleaner tensioner

Spring Cover Selection Chart

TENSIONER	SPRING COVER REQ'D
EST-P	77387
EST-S	77387
EST-B	77388
QMT-P	77389
QMT-W	77390
QMT-G	77391
QMT-S	77391
PST-R	77391
PST-W	77390
PST-S	77390
SST-W	77392
SST-S	77392
SST-B	77393
SST-G	77392
UST-P	77387
UST-S	77387
UST-W	77390
CST-W	77741
CST-S	77741
CST-B	77741
CST-G	77741

Tensioner Lock*

Designed to prevent tampering or unauthorized retensioning of the cleaner.

ORDERING NUMBER	ITEM CODE	WT. LBS.
TEN-LOCK-KIT	77443	0.4

*For MSP, MMP, MHP, MHCP, H-Type Precleaners and MSS, MHS, MDWS Secondary Cleaners
Includes 1 tensioner lock
Lead time: 1 working day

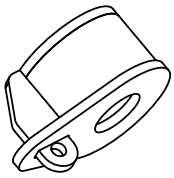

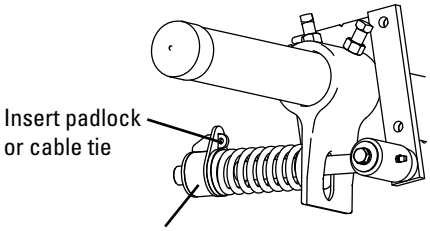

(Precleaner tensioner shown)

Product Ordering Information

Inspection Doors

DESCRIPTION	ORDERING NUMBER	ITEM CODE	WT. LBS.
Inspection Door 12 x 12 (300x300mm)*	INDR-1212	79303	19.2
Inspection Door 12 x 18 (300x450mm)*	INDR-1218	79304	23.5
Inspection Door 18 x 24 (450x600mm)*	INDR-1824	79305	35.2
Inspection Door 24 x 24 (600x600mm)*	INDR-2424	79306	42.8
Inspection Door w/Screen 12 x 12 (300x300mm)*	INDR-1212S	79307	21.2
Inspection Door w/Screen 12 x 18 (300x450mm)*	INDR-1218S	79308	26.0
Inspection Door w/Screen 18 x 24 (450x600mm)*	INDR-1824S	79309	39.7
Inspection Door w/Screen 24 x 24 (600x600mm)*	INDR-2424S	79310	48.3

*Hardware included

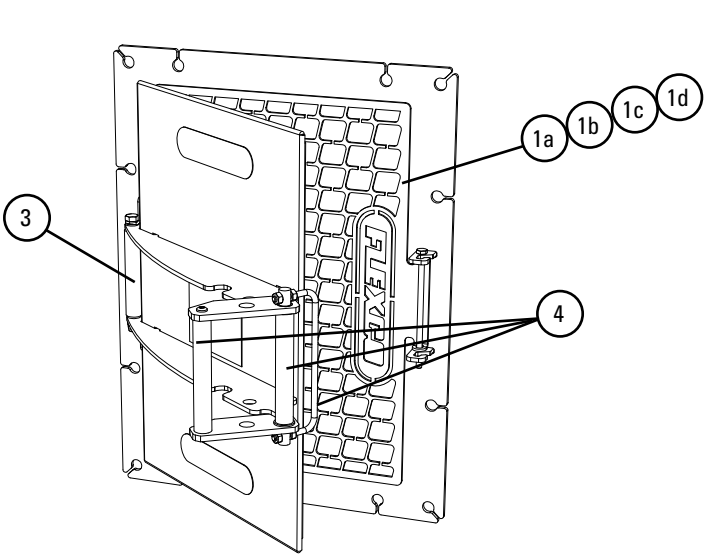

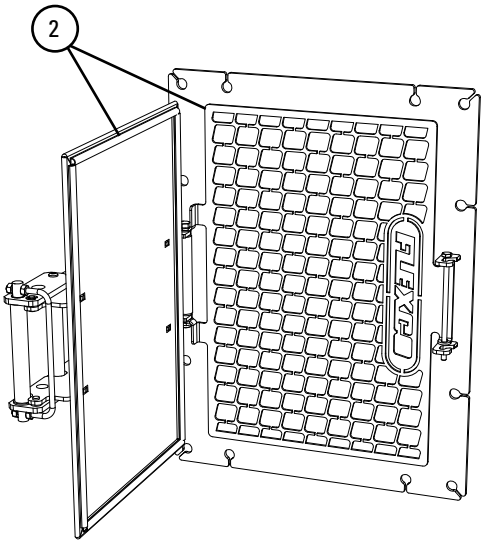

Replacement Parts

REF	DESCRIPTION	ORDERING NUMBER	ITEM CODE	WT. LBS.
1a	Inspection Door Screen 12 x 12 (300x300mm)*	IDSC-1212	79311	1.9
1b	Inspection Door Screen 12 x 18 (300x450mm)*	IDSC-1218	79312	2.5
1c	Inspection Door Screen 18 x 24 (450x600mm)*	IDSC-1824	79313	4.4
1d	Inspection Door Screen 24 x 24 (600x600mm)*	IDSC-2424	79314	5.5
2	Replacement Seal - 5′ (1.5M)**	IDSEAL	79315	0.1
3	Replacement Hinge	IDHINGE	79316	0.2
4	Replacement Latch (incl. bolt, bushings & nut)	IDLATCH	79317	2.5

*Hardware included

**One 5′ length of seal is needed for 12x12″ and 12x18″ doors or screens, and two 5′ lengths are needed for 18x24″ and 24x24″ doors or screens. Double if replacing seal on both door and screen.

Specifications & Guidelines

Inspection Door Specifications					
Door (Opening) Size (Width, Length)		Outer Dimensions (Width, Length)		Height	
in.	mm	in.	mm	in.	mm
12 W x 12 L	300 W x 300 L	16-5/16 W x 15-3/4 L	415 W x 400 L	3-7/16	90
12 W x 18 L	300 W x 450 L	16-5/16 W x 21 3/4 L	415 W x 555 L	3-7/16	90
18 W x 24 L	450 W x 600 L	22-5/16 W x 27 3/4 L	570 W x 705 L	3-7/16	90
24 W x 24 L	600 W x 600 L	28-5/16 W x 27 3/4 L	720 W x 705 L	3-7/16	90

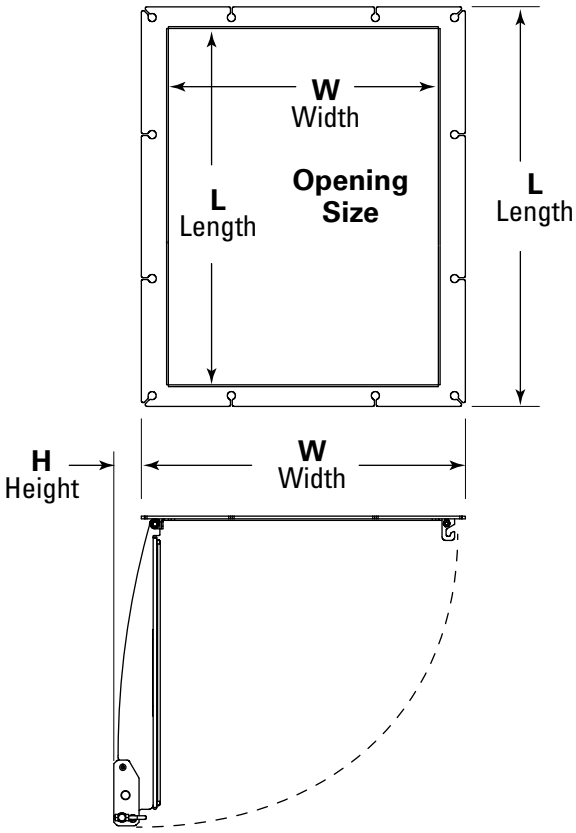

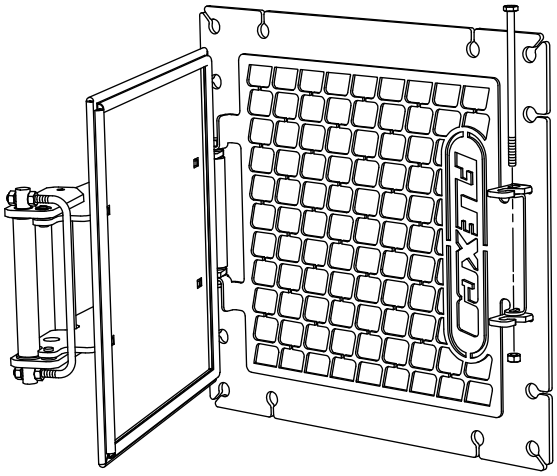

Screen (Optional)

Screen serves as a guard that helps keep hands and tools from being placed into the chute/enclosure, but still allows visual access. Screen is hinged on the same side as the door and bolted in place on the other side so it does not require full removal for accessing the chute/enclosure. A wrench is required to remove the bolt that holds the screen in place as a safety feature. (Holes are sized per ANSI B11 and ISO 1819.)

Specifications:

- Temperature Rating .....-70°F to 350°F (-55°C to 175°C)

Product Ordering Information

Spray Pole Kits*

Standard & Heavy-Duty

BELT WIDTH		ORDERING NUMBER	ITEM CODE	WT. LBS.
in.	mm			
18	450	SPK18	74709	23.0
24	600	SPK24	74710	23.0
30	750	SPK30	74711	24.0
36	900	SPK36	74712	24.0
42	1050	SPK42	74713	25.5
42	1050	SPKHD42	74952	26.5
48	1200	SPK48	74714	26.0
48	1200	SPKHD48	74953	27.0
54	1350	SPK54	74715	27.0
54	1350	SPKHD54	74954	28.0
60	1500	SPK60	74716	28.0
60	1500	SPKHD60	74955	29.0
72	1800	SPK72	74717	30.0
72	1800	SPKHD72	74718	32.0
84	2100	SPKHD84	74719	34.0
96	2400	SPKHD96	74720	36.0
120	3000	SPKHD120	74721	40.0

*Includes Spray Pole, Mounting Brackets, and 10' (3M) Hose. Standard-duty is for use on P-Type®, R-Type®, U-Type® 18" - 60", Y-Type®SD, and EZS2 cleaners; Heavy-duty is for use on H-Type®, U-Type® 72" - 96", Y-Type®HD, FMS, CBS, MHS, and MDWS cleaners.
Other sizes available upon request.
Lead time: 1 working day

Spray Pole

Spray Pole Control Panel

Replacement Parts

DESCRIPTION	ORDERING NUMBER	ITEM CODE	WT. LBS.
Standard Spray Pole Mounting Kit	SPMK2	75578	3.6
HD Spray Pole Mounting Kit	SPMK3	75579	3.7
SP Ball Valve	SPBV	74742	0.6
SP Y Strainer	SPYS	74743	1.5
SP Pressure Regulator	SPPR	74744	1.2
SP Hose 10 ft	SPH10	74745	2.9
Spray Pole Nozzle	SPN	74746	0.1
Spray Pole Gauge	SPG	74747	0.5
SP SS Pipe Nipple	SPPN	74748	0.1

Lead time: 1 working day

Control Assembly

DESCRIPTION	ORDERING NUMBER	ITEM CODE	WT. LBS.
SP Control Panel with Regulator, Strainer and Pressure Gauge	SPCP	74734	16.5

Lead time: 1 working day

Spray Nozzles Per Cleaner Size

in.	18	24	30	36	42	48	54	60	72	84	96	120
mm	450	600	750	900	1050	1200	1350	1500	1800	2100	2400	3000
Spray Nozzles	1	2	2	3	3	4	4	5	6	7	8	10

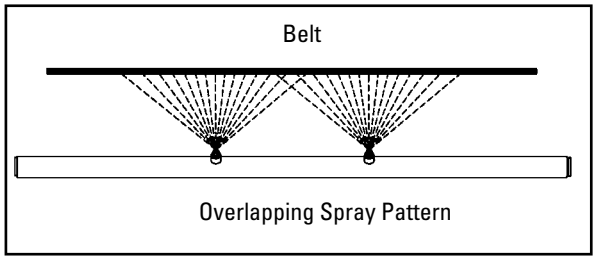

Specifications

- Stainless steel pole with powder coated steel clamping brackets.
- Spray nozzles are spaced on 12" (300mm) centers.
- Delivers .98 gallons (3.7 liters) per minute at 60 psi (414 kPa).
- Generally will affect moisture content of material by less than ½%.
- Maximum inlet pressure is 300 psi (2069 kPa).
- Typical pressure setting is 40-60 psi (276-414 kPa).

Product Ordering Information

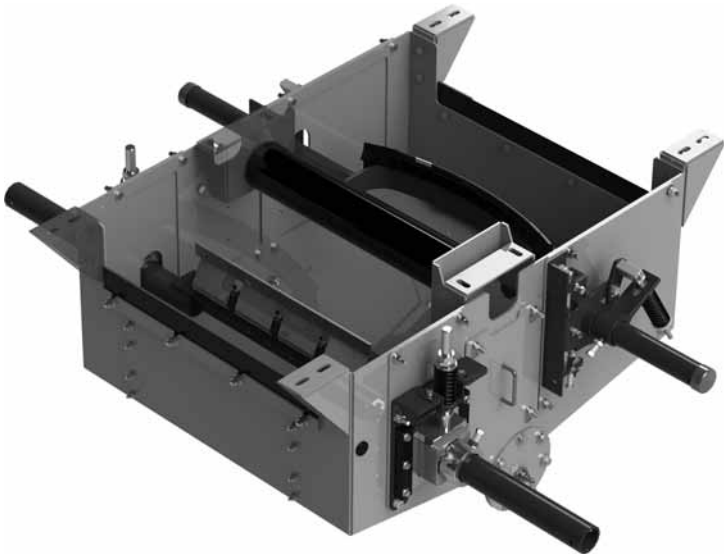

Wash Box

BELT WIDTH		DRAIN	ORDERING NUMBER	ITEM CODE	WT. LBS.	FLUSH HOLES PER BELT WIDTH	VOLUME CU. FT.
in.	mm						
24	600	Rear	WB24-2-S/S	K2546	484.91	5	22.66
30	750	Rear	WB30-2-S/S	K2547	532.57	5	26.39
36	900	Rear	WB36-2-S/S	K2548	574.70	6	30.11
42	1050	Rear	WB42-2-S/S	K2549	616.83	6	33.84
48	1200	Rear	WB48-2-S/S	K2550	658.96	7	37.56
54	1350	Rear	WB54-2-S/S	K2551	701.09	7	41.29
60	1500	Rear	WB60-2-S/S	K2552	743.22	8	45.01
72	1800	Rear	WB72-2-S/S	K2553	827.48	9	52.46
84	2100	Rear	WB84-2-S/S	K2554	911.74	10	59.91
96	2400	Rear	WB96-2-S/S	K2555	996.00	11	67.36
24	600	Center	WB24C-2-S/S	K2686	462.72	9	20.71
30	750	Center	WB30C-2-S/S	K2687	504.00	9	24.12
36	900	Center	WB36C-2-S/S	K2688	544.17	11	27.52
42	1050	Center	WB42C-2-S/S	K2689	585.45	11	30.93
48	1200	Center	WB48C-2-S/S	K2690	626.73	13	34.33
54	1350	Center	WB54C-2-S/S	K2691	668.01	13	37.74
60	1500	Center	WB60C-2-S/S	K2692	709.29	15	41.14
72	1800	Center	WB72C-2-S/S	K2693	791.85	17	47.95
84	2100	Center	WB84C-2-S/S	K2694	874.41	19	54.76
96	2400	Center	WB96C-2-S/S	K2695	956.97	21	61.57

The dimensions, mass & volumes shown here are nominal for a standard Flexco Wash Box and will be confirmed to suit each specific application. Each flush hole's flow rate is approximately 0.13 gallon per minute at 60psi.
Lead-time 4-6 weeks

Control Assembly

DESCRIPTION	ORDERING NUMBER	ITEM CODE	WT. LBS.
SP Control Panel with Regulator, Strainer and Pressure Gauge	SPCP	74734	16.5

Lead time: 1 working day

Product Notes:

- Flexco Wash Box system provides a high-efficiency customized belt cleaning solution for even the toughest applications
- Fully enclosed to clean the belt and then contain the waste wash water
- Washdown sprays flush material off the bottom pan and out the drain portal
- Custom mounting plates match cleaner selection for optimal sealing
- Hinged doors located on each side for easy inspection
- Built-in belt spray bar enhances cleaning efficiency and simplifies cleaner service

Specifications & Guidelines

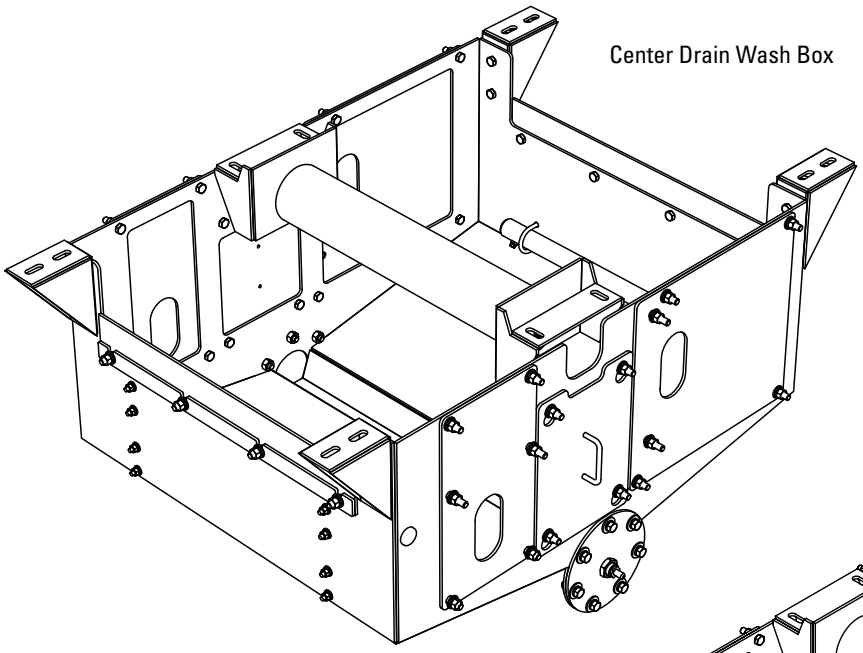

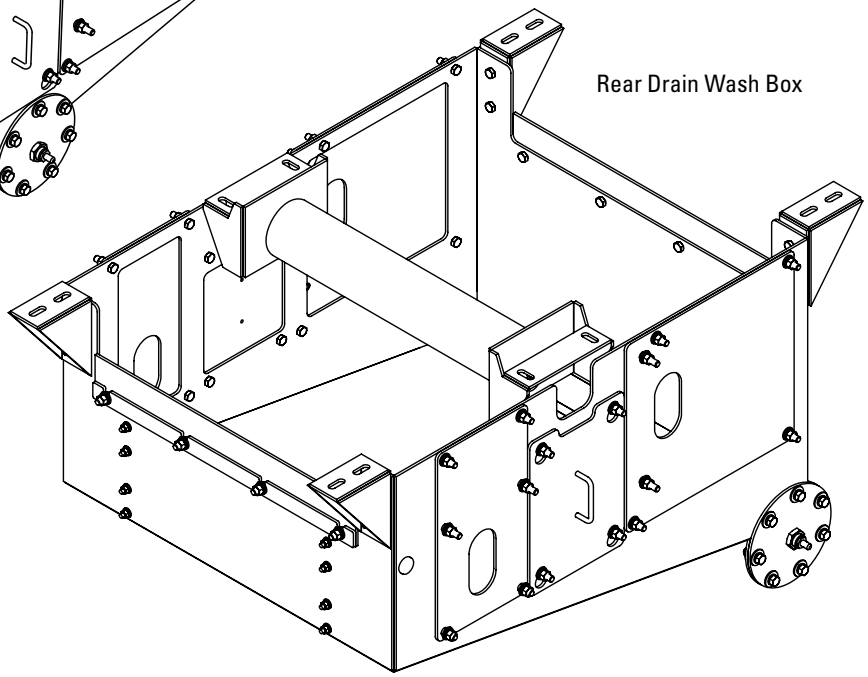

Specifications:

- Maximum Belt Speed .....1500 FPM (7.6 m/)
- Temperature Rating .....-30°F to 180°F (-35°C to 192°C)
- Available for Belt Widths .....24" to 96" (600 to 2400 mm)
- Drain Options .....Rear Drain (suitable for most applications)
  Center Drain (suitable for conveyors level to ground)
- Construction Materials.....304 Stainless
- For Use With.....Any Flexco Secondary Cleaner Combination

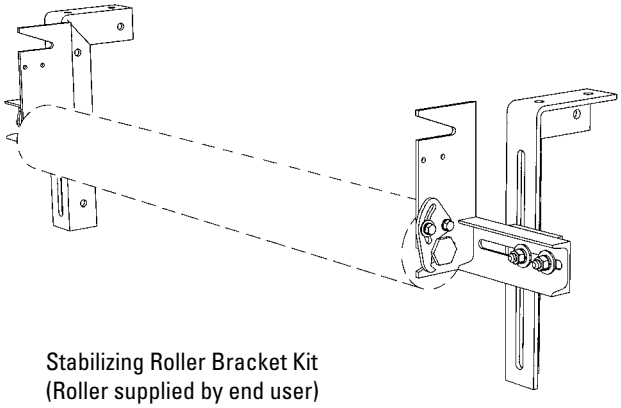

Stabilizing Roller Bracket Kit
(Roller supplied by end user)

Stabilizing Roller Bracket Kit*

Provides universal brackets to mount the user's return roller as a hold-down (stabilizing) roller on top of the return side belt. Holds the belt flat so the belt cleaner can maximize its cleaning performance.

DESCRIPTION	ORDERING NUMBER	ITEM CODE	WT. LBS.
Stabilizing Roller Bracket Kit	SRBK	74941	34.0

*Works with most CEMA C and D rollers.
Lead time: 1 working day

Product Ordering Information

Live-Shaft Hold-Down Roll

BELT WIDTH		ROLL DIAMETER		ORDERING NUMBER	ITEM CODE	WT. LBS
in.	mm	in.	mm			
24	600	4 1/2	114	HDR24	79010	159.0
30	750	4 1/2	114	HDR30	79011	169.0
36	900	4 1/2	114	HDR36	79012	180.0
42	1050	4 1/2	114	HDR42	79013	190.0
48	1200	4 1/2	114	HDR48	79014	249.0
54	1350	4 1/2	114	HDR54	79015	255.0
60	1500	4 1/2	114	HDR60	79016	265.0
72	1800	5	127	HDRS72*	79017	565.0
84	2100	5	127	HDRS84*	79018	615.0

Includes roller bracket kit
*72” and 84” feature solid roll
Lead time: 1 working day

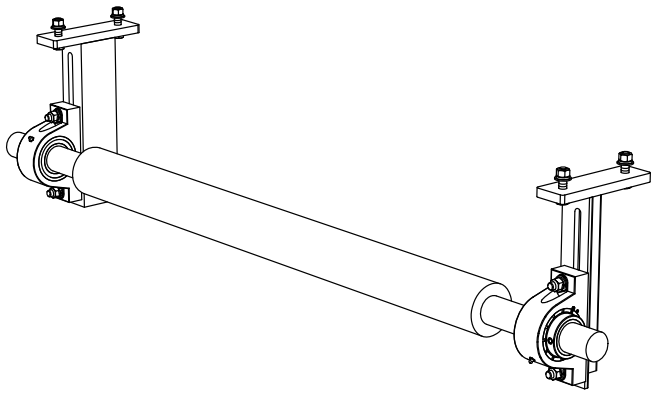

Replacement Roll

BELT WIDTH		ROLL DIAMETER		ORDERING NUMBER	ITEM CODE	WT. LBS
in.	mm	in.	mm			
24	600	4 1/2	114	HDRR24	79019	114.0
30	750	4 1/2	114	HDRR30	79020	124.0
36	900	4 1/2	114	HDRR36	79021	135.0
42	1050	4 1/2	114	HDRR42	79022	145.0
48	1200	4 1/2	114	HDRR48	79023	204.0
54	1350	4 1/2	114	HDRR54	79024	210.0
60	1500	4 1/2	114	HDRR60	79025	220.0
72	1800	5	127	HDRRS72*	79026	520.0
84	2100	5	127	HDRRS84*	79027	570.0

*72” and 84” feature solid roll
Lead time: 1 working day

Roller Bracket Kit*

DESCRIPTION	ORDERING NUMBER	ITEM CODE	WT. LBS
Hold Down Roll Bracket Kit - 24" to 60"	HDRBK	79009	45.0
HD Hold Down Roll Bracket Kit - 72" to 84"	HDRBK-HD	79072	45.0

*Includes Left and Right Bracket
Lead time: 1 working day

Add-On Grease Hose Extension Kit

DESCRIPTION	ORDERING NUMBER	ITEM CODE	WT. LBS
Grease Hose Extension Kit incl. 2 ea. 16” hose w/fittings and tie-downs	HDRGEK	79236	1.0

Lead time: 1 working day

Specifications:

- Overall Roll Length ..... Belt Width +6” (150mm)
- Overall Shaft Length ..... Belt Width +30” (750mm)
- Shaft Diameter ..... 24”- 42” (600-1050mm) – 1-15/16” diameter
  48”- 60” (1200-1500mm) – 2-7/16” diameter
  72”- 84” (1800-2100mm) – 2-15/16” diameter
- Shaft Construction ..... 24”- 60” (600-1500mm) – 1045 CD
  72”- 84” (1800-2100mm) turned from solid 4140 round stock

Product Notes:

- For use in applications with belt cup or belt flap.
- By preventing these issues secondary cleaner performance and blade/tip life is enhanced.

Tip Tension Scale

For easy checking of blade tension on all H-Type® Precleaners.

DESCRIPTION	ORDERING NUMBER	ITEM CODE	WT. LBS.
H Tip Tension Scale	HTTS	74141	0.1

Lead time: 1 working day

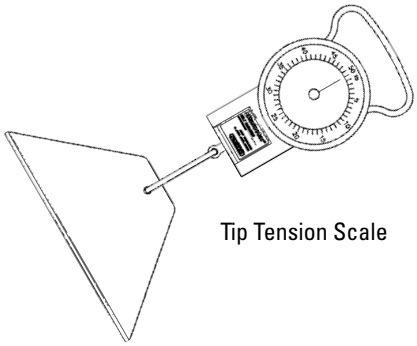

Tip Tension Scale

Spring Tension Chart

CLEANER	HXF	H V-Tip	H Protected V-Tip	Hi-Temp V-Tip
Pounds	28#	18#	18#	18#
Kg	12.7	8.2	8.2	8.2

For installation and for retensioning blades during maintenance.

Cleaner Location Tool

Handy 2-in-1 tool for measuring and leveling during cleaner installation.

DESCRIPTION	ORDERING NUMBER	ITEM CODE	WT. LBS.
Location Tool	ELT	74774	0.3

Length - 24" (600mm)
Lead time: 1 working day

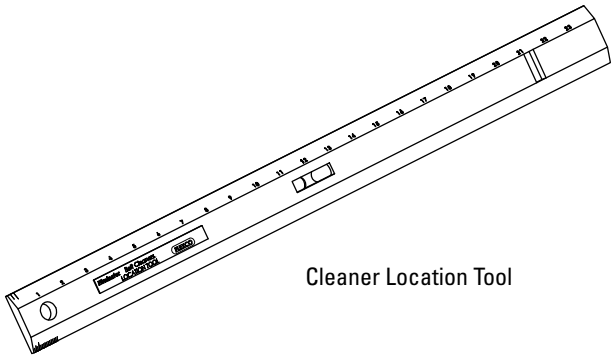

Cleaner Location Tool

Belt Cleaner Handy Wrench

A ratcheting wrench with 2 common socket sizes (11/16" & 3/4", 17mm & 19mm) for belt cleaner installation and maintenance.

DESCRIPTION	ORDERING NUMBER	ITEM CODE	WT. LBS.
Belt Cleaner Handy Wrench	HW-BC	74100	1.2

Lead time: 1 working day

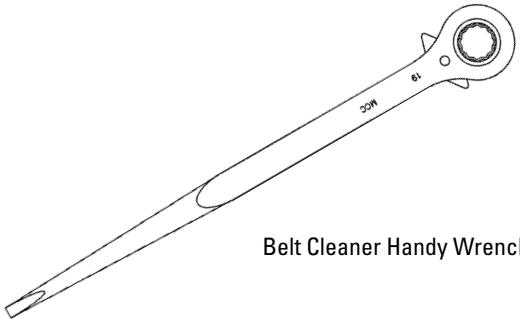

Belt Cleaner Handy Wrench

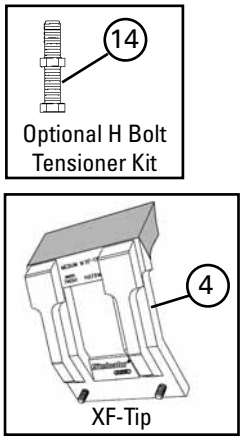

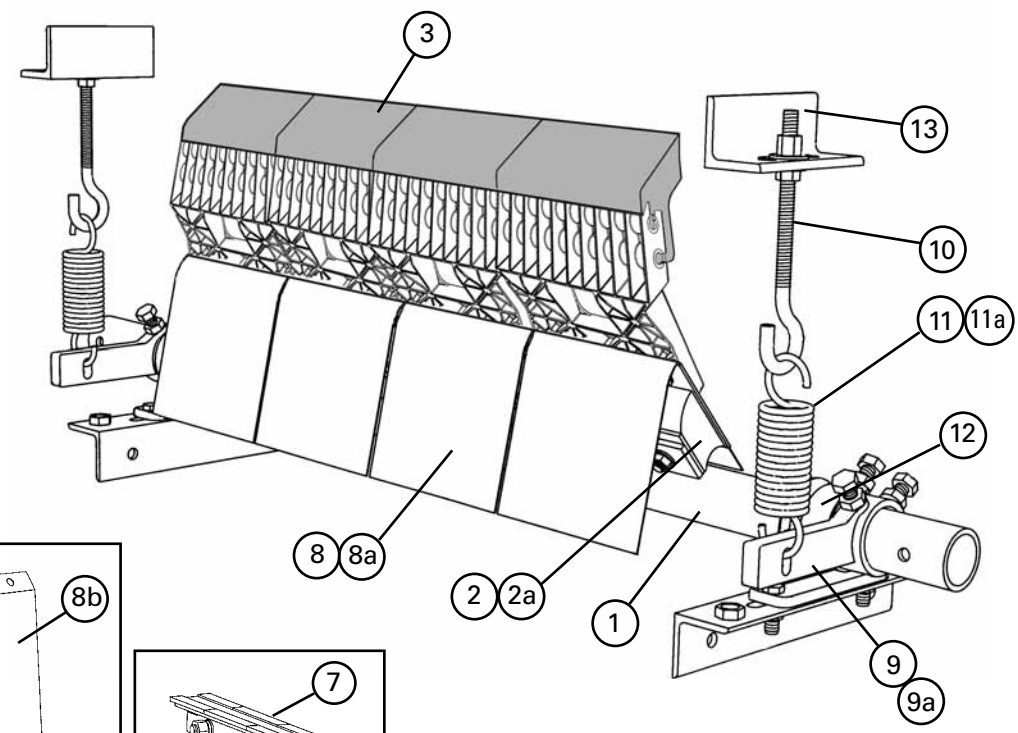

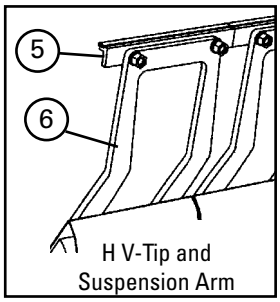

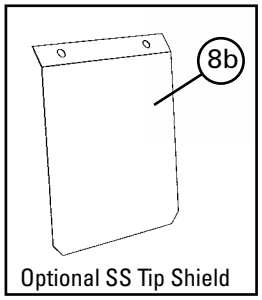

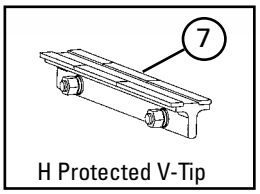

Replacement Parts

REF	DESCRIPTION	ORDERING NUMBER	ITEM CODE	WT. LBS.
1	18" (450mm) Pole	HP-18	78990	23.0
	24" (600mm) Pole	HP-24	78991	27.0
	30" (750mm) Pole	HP-30	78992	29.0
	36" (900mm) Pole	HP-36	78993	33.0
	42" (1050mm) Pole	HP-42	78994	43.0
	48" (1200mm) Pole	HP-48	78995	47.0
	54" (1350mm) Pole	HP-54	78996	53.0
	60" (1500mm) Pole	HP-60	78997	59.0
	72" (1800mm) Pole	HP-72	78998	66.0
2	H2 XF-Tip Cushion* (for HXF2 & HV Tips)	HXFC2	75902	4.0
2a	H2 F-Tip Cushion* (for SS HXF2 & SS HV Tips)	HFC2	75901	4.0
3	HXF2-Tip Extra Small*	HXF2-SS	75979	3.0
	HXF2-Tip Small*	HXF2-S	75980	3.4
	HXF2-Tip Medium*	HXF2-M	75981	3.8
	HXF2-Tip Large*	HXF2-L	75982	4.1
4	H XF-Tip Extra Small*	HXF8SS	74307	3.4
	H XF-Tip Small*	HXF8S	74689	3.8
	H XF-Tip Medium*	HXF8M	74690	4.1
	H XF-Tip Large*	HXF8L	74691	4.5
5	H V-Tip (for vulcanized belts only)	HVT8-S/S	75419	1.0
6	H SSS Suspension Arm*	HSA8SSS	75565	0.4
	H SS Suspension Arm*	HSA8SS	73047	0.5
	H S Suspension Arm*	HSA8S	73048	1.0
	H M Suspension Arm*	HSA8M	73049	1.5
	H L Suspension Arm*	HSA8L	73063	2.0
	H LL Suspension Arm*	HSA8LL	73064	2.5
7	H Protected V-Tip* (for vulcanized belts only)	HVPT	73631	2.7

*Hardware included
Pole Diameter - 2-3/8" (60mm)
Lead time: 1 working day

Shaded items are made to order.
Lead time: 10 working days

REF	DESCRIPTION	ORDERING NUMBER	ITEM CODE	WT. LBS.
8	H Polyshield	HPS8	73050	0.5
8a	H SS Cushion Shield	HSSCS	74772	0.6
8b	H SS Tip Shield	HSSTS	74771	0.5
9	H Adjusting Arm Repair Kit* (includes 1 adjusting arm)	HAR-K	78786	6.0
9a	H HD Adjusting Arm Repair Kit* (includes 1 adjusting arm)	HDARK	74550	8.0
10	J-Bolt Kit* (includes 1 ea.)	STJK	74417	0.7
11	Tension Spring (includes 1 ea.) for 18" (450mm)	STTS	74419	1.4
11a	HD Tension Spring (includes 1 ea.) for sizes 24" to 72" (600-1800mm)	HDTS	74502	2.0
12	Pole Lock (includes 1 ea.)	EZP1PL	75641	1.1
13	Spring Tensioner J-Bolt Mount (incl. 1 ea.)	STJM	74775	3.0
-	H Mounting/J-Bolt Kit - Single (incl. 1 ea. items 9,10,11,12,13 and 2 ea. bracket/ bearing)	H-MK1	78987	20.0
-	H Mounting/J-Bolt Kit - Dual (incl. 2 ea. items 9,10,11,12,13 and bracket/ bearing)	H-MK2	78801	24.4
-	Spring Tension Kit - Single (incl. 1 ea. items 10,11, & 13 and 2 ea. item 12)	STKS	74505	6.8
-	Spring Tension Kit - Dual (includes 2 ea. items 10,11,12 & 13)	STKD	74504	11.2
-	Spring Tension Kit HS - Single (incl. 1 ea. items 10,11a, & 13 and 2 ea. item 12)	STKHSS	74313	8.0
-	Spring Tension Kit HS - Dual (includes 2 ea. items 10,11a,12 & 13)	STKHSD	74316	16.0
14	H Bolt Tensioner Kit (includes 2 adjusting bolts & 2 jam nuts)	HBTK	74776	0.5

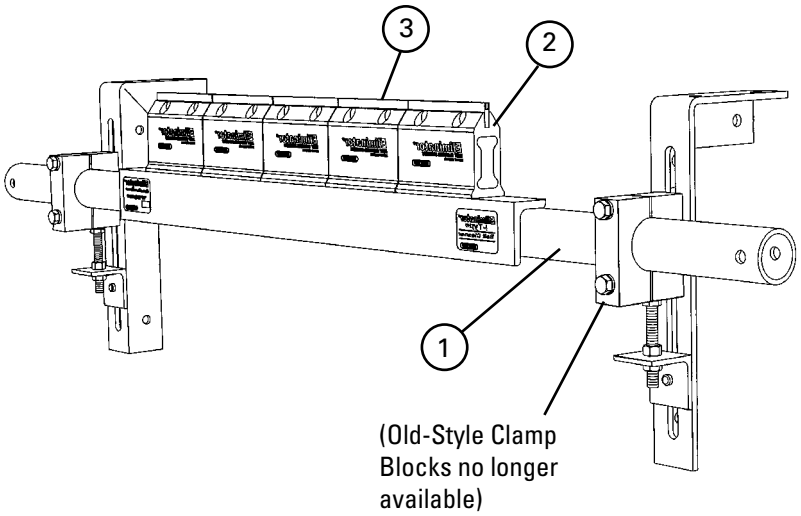

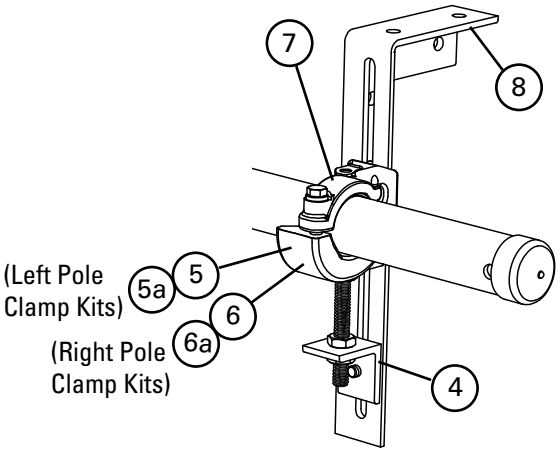

New Style Clamp Block

I-Type™ Replacement Parts

REF	DESCRIPTION	ORDERING NUMBER	ITEM CODE	WT. LBS.
1	18" (450mm) Pole	EZS2P18	75652	25.0
	24" (600mm) Pole	EZS2P24	75653	28.0
	30" (750mm) Pole	EZS2P30	75654	30.0
	36" (900mm) Pole	EZS2P36	75655	34.0
	42" (1050mm) Pole	EZS2P42	75656	36.0
	48" (1200mm) Pole	EZS2P48	75657	39.0
	54" (1350mm) Pole	EZS2P54	75658	42.0
	60" (1500mm) Pole	EZS2P60	75659	77.0
	72" (1800mm) Pole	EZS2P72	75660	89.0
2	I Standard Cushion*	ISC	74534	2.1
3	I C-Tip* (for mechanically spliced and vulcanized belts)	ICT6	74535	0.7
4	Adjusting Bracket Kit (1 Right and 1 Left)	PAB	75513	1.5
5	Pole Clamp Kit LEFT* (1 ea.) (incl. item 7) (for sizes 18"-54" (450-1350mm)	CCKL	79224	6.8
5a	HD Pole Clamp Kit LEFT* (1 ea.) (incl. item 7a) for sizes 60"-72" (1500-1800mm)	CCKHDL	79225	8.7
6	Pole Clamp Kit RIGHT* (1 ea.) (incl. item 7) for sizes 18"-54" (450-1350mm)	CCKR	79228	6.8
6a	HD Pole Clamp Kit RIGHT* (1 ea.) (incl. item 7a) for sizes 60"-72" (1500-1800mm)	CCKHDR	79229	8.7
7	Cradle Clamp Top Strap (1 ea.) for use on L or R Pole Clamp Kit	CCKTS	79232	1.1
7a	HD Cradle Clamp Top Strap (1 ea.) for use on L or R HD Pole Clamp Kit	CCKHDTS	79233	1.7
8	Mounting Bracket Kit (1 Right and 1 Left)	EZS2MBK	75666	13.0
–	Cradle Clamp Mounting Kit* for sizes 18"-54" (450-1350mm) (incl. 1 ea. Items 5, 6, & 8, 2 ea. Items 4 & 7)	CCMK	78919	33.0
–	HD Cradle Clamp Mounting Kit* for sizes 60"-72" (1500-1800mm) (incl. 1 ea. Items 5a, 6a, & 8, 2 ea. Items 4 & 7a)	CCMKHD	78920	36.7

*Hardware included.
Pole Diameter - 2-3/8" (60mm)
Lead time: 1 working day

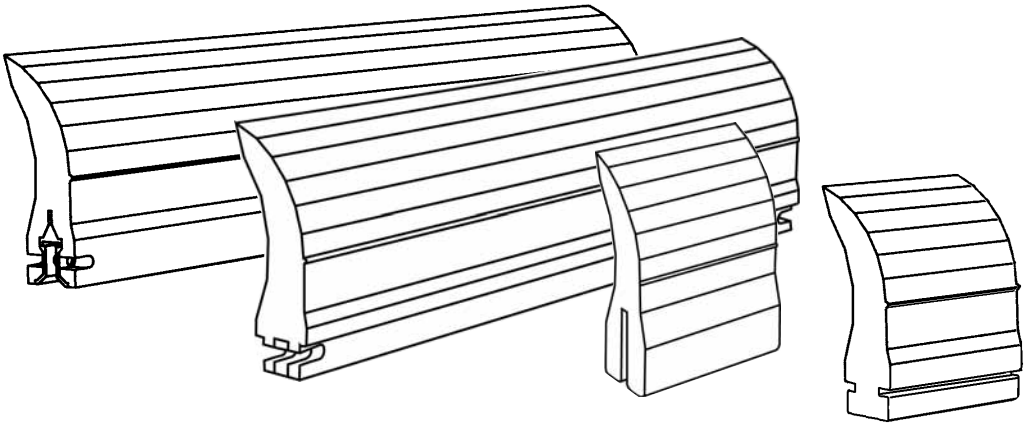

ConShear™ Blade Technology

The patented polyurethane blade design that delivers a conforming and shearing action to provide consistent belt cleaning.

- **Faceted Profile** – the blade forms a new cleaning edge each time the blade wears down to a new faceted section.
- **Long Wearing** – a proprietary polyurethane blend that provides up to 30% more wear life than conventional solid blades.
- **Material Path Option** – choose the blade size that spans just the material path on the belt. This minimizes differential wear between the ends and the center of the blade. It allows the blade to conform better to the belt for more cleaning power. See page 168 for more information.
- **Replacement Indicator** – a molded-in wear line provides easy visual notice when the blade is worn out and needs to be replaced.
- **Quick, Easy Change-Out** – simply pull one pin, remove the worn blade, insert the new blade and replace the pin.

For best cleaning and wear life results the ConShear blade must be located against the conveyor head pulley in the correct position and must be tensioned properly.
See page 168 for proper blade installation and tensioning instructions.

Installation and Tensioning Tips

For optimal cleaning efficiency and long wear life, the ConShear™ blade must be located and tensioned correctly on the belt head pulley. If the OEM cleaner pole is in the wrong location the performance of the new blade may be adversely affected. See "Possible Problems" below. For tensioning, please follow these instructions. Our recommended tensioning may be as much as 2 times more than the OEM recommendation, but the added tension is needed to take full advantage of the ConShear Blade Technology.

Correct Location:
When blade contact is made against the head pulley (prior to tensioning) there should be a 1/16" (1.5mm) to 1/8" (3mm) gap at the bottom of the blade face (Fig. 1).

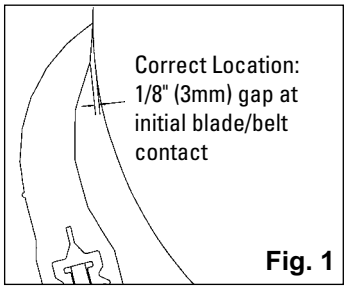

Fig. 1

Possible Problems:

- ***Pole location too far out*** – The initial blade/belt contact gap will be larger than 1/8" (3mm)(Fig. 2). If the blade is correctly tensioned it may flip through before it is fully worn. If tensioned too lightly, it will develop the "smile effect" quickly and not clean properly.
- ***Pole location too far in*** – If there is no gap at the initial blade/belt contact (Fig. 3), the tip of the blade may not be touching the belt. In this case, the blade will push away and lose its shearing (cleaning) effect. The blade may also develop a flap at the tip which may trap material.

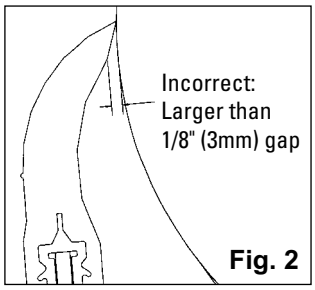

Fig. 2

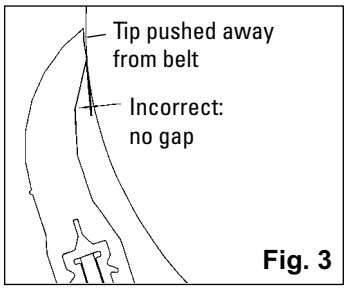

Fig. 3

Correct Tensioning:
The blade should be tensioned until the gap is gone (Fig. 4).

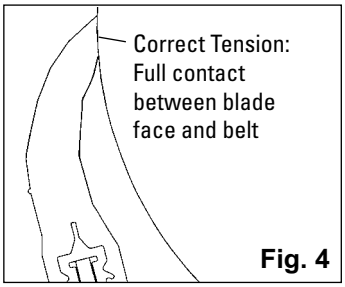

Fig. 4

The "Material Path" Option

For optimal cleaning and reduced blade retensioning, the cleaner blade width should be sized to fit the material path of the belt. The material path is typically the center 2/3 of the belt width. Choosing a blade only slightly wider than the material path can decrease differential blade wear which reduces blade retensioning maintenance, as well as reducing the frequency of blade replacement.

Match blade width to belt's material path

Belt Width Minus 2" (50mm)

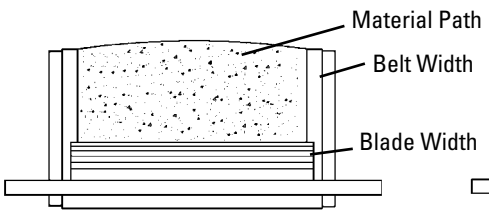

Belt Width Minus 8" (200mm)

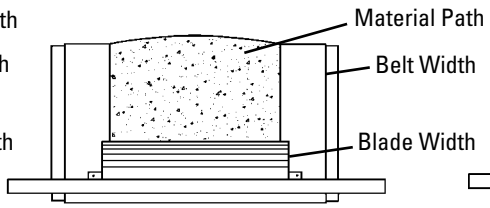

Belt Width Minus 14" (350mm)

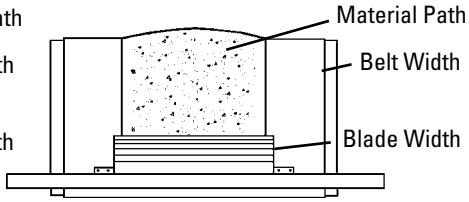

Part Number Cross-Reference Guide

Cross-Reference for Replacement of Martin® QC® #1 Standard Blades and Martin® Pit Viper™ Standard Blades

Ordering Information

BELT WIDTH	ACTUAL BLADE LENGTH	MARTIN® QC #1® PART NUMBER	MARTIN® PIT VIPER™ PART NUMBER	ORDERING NUMBER	CONSHEAR™ ITEM CODE	WT. LBS.
12"	10"	32773-1211	PV121110OR	CRB10	75628	4.6
18"	16"	32773-1811	PV181116OR	CRB16	75629	7.3
24"	22"	32773-2411	PV241122OR	CRB22	75630	10.1
30"	28"	32773-3011	PV301128OR	CRB28	75631	12.8
36"	34"	32773-3611	PV361134OR	CRB34	75632	15.5
42"	40"	32773-4211	PV421140OR	CRB40	75633	18.3
48"	46"	32773-4811	PV481146OR	CRB46	75634	21.0
54"	52"	32773-5411	PV541152OR	CRB52	75635	23.8
60"	58"	32773-6011	PV601158OR	CRB58	75636	26.5
72"	70"	32773-7211	PV721170OR	CRB70	75773	32.0

Additional blade sizes are available upon request. Call for pricing.
NOTE: Blade coverage is 2 inches less than belt width.
Lead time: 1 working day
NOTE: Also works on Baker-Bohnert Yellow Jacket™ Primary Cleaners.

Replacement Blade Pin

ORDERING NUMBER	ITEM CODE	WT. LBS.
EZP1BP	75642	0.1

Lead time: 1 working day

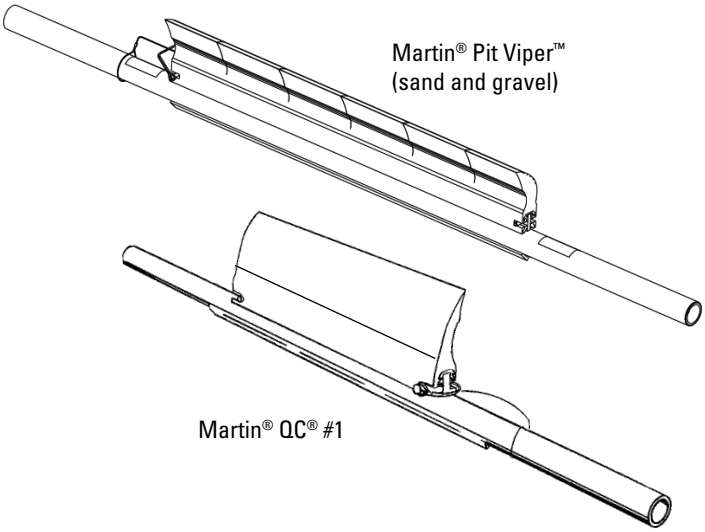

Specifications

SLOT WIDTH	POLE PLATE THICKNESS	CONSHEAR BLADE HEIGHT	QC#1 BLADE HEIGHT
7/16"	5/16"	7-1/4"	6-3/4"

Usable Blade Volume Comparison

BLADE TYPE	BLADE LENGTH	Usable BLADE AREA (cross-section)	Usable BLADE VOLUME
Martin® QC™ #1	28"	3.00 in^2	84.0 in^3
Martin® Pit Viper™	28"	4.20 in^2	117.6 in^3
ConShear™	28"	5.50 in^2	154.0 in^3

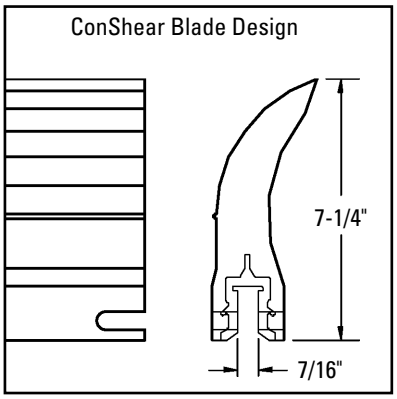

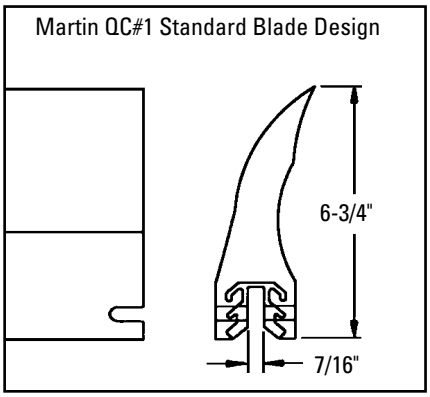

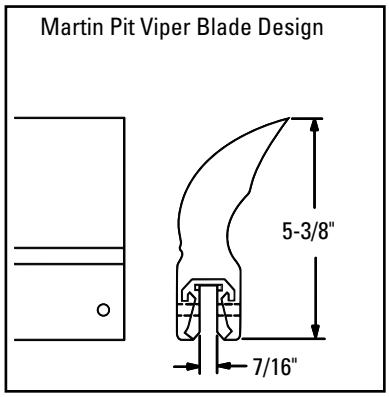

Martin® and QC® #1 are registered trademarks, and Pit Viper™ is a trademark of Martin Engineering, Neponset, IL.
Yellow Jacket™ is a trademark of Baker-Bohnert, Louisville, KY

Part Number Cross-Reference Guide

Cross-Reference for Replacement of Martin® QC® #1 Heavy-Duty Blades

Ordering Information

BELT WIDTH	ACTUAL BLADE LENGTH	MARTIN® PART NUMBER	ORDERING NUMBER	CONSHEAR™ ITEM CODE	WT. LBS.
18"	12"	35381-1811	RBQC1HD-12	75985	5.5
24"	18"	35381-2411	RBQC1HD-18	75986	8.3
30"	24"	35381-3011	RBQC1HD-24	75987	11.0
36"	30"	35381-3611	RBQC1HD-30	75988	13.8
42"	36"	35381-4211	RBQC1HD-36	75989	16.6
48"	42"	35381-4811	RBQC1HD-42	75990	19.3
54"	48"	35381-5411	RBQC1HD-48	75991	22.1
60"	54"	35381-6011	RBQC1HD-54	75992	24.8
72"	66"	35381-7211	RBQC1HD-66	75993	30.4

Additional blade sizes are available upon request. Call for pricing.
NOTE: Blade coverage is 6 inches less than belt width.
Lead time: 1 working day

Replacement Blade Pin

ORDERING NUMBER	ITEM CODE	WT. LBS.
RB38BP	79481	0.2

Lead time: 1 working day

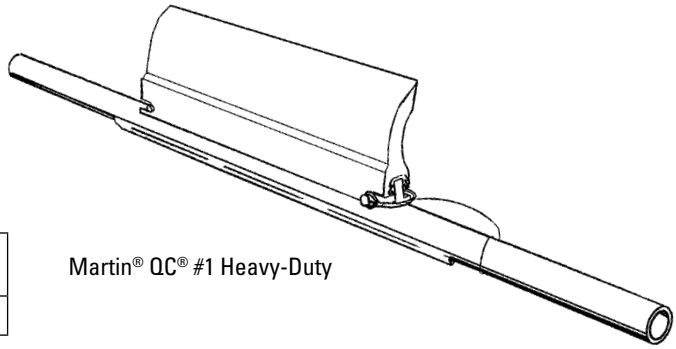

Martin® QC® #1 Heavy-Duty

Specifications

SLOT WIDTH	POLE PLATE THICKNESS	CONSHEAR BLADE HEIGHT	QC#1HD BLADE HEIGHT
9/16"	1/2"	7-1/4"	7-1/4"

Usable Blade Volume Comparison

BLADE TYPE	BLADE LENGTH	Usable BLADE AREA (cross-section)	Usable BLADE VOLUME
Martin® QC™ #1 HD	28"	6.65 in^2	186.2 in^3
ConShear™	28"	5.50 in^2	154.0 in^3

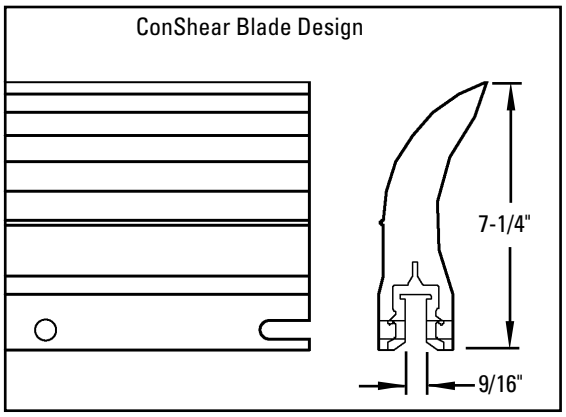

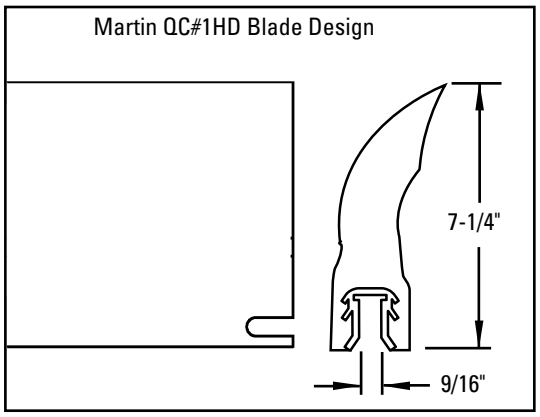

Martin® and QC® #1 are registered trademarks of Martin Engineering, Neponset, IL.

Part Number Cross-Reference Guide

Cross-Reference for Replacement of Martin® QB® #1 Blades

Ordering Information

BELT WIDTH	ACTUAL BLADE LENGTH	MARTIN® PART NUMBER	ORDERING NUMBER	CONSHEAR™ ITEM CODE	WT. LBS.
18"	16"	39344-181116OR	RBQB1-16/400	90935	7.3
24"	18"	39344-241118OR	RBQB1-18/450	90936	8.2
	22"	39344-241122OR	RBQB1-22/550	90937	10.1
30"	24"	39344-301124OR	RBQB1-24/600	90938	11.0
	28"	39344-301128OR	RBQB1-28/700	90939	12.8
36"	30"	39344-361130OR	RBQB1-30/750	90940	13.7
	34"	39344-361134OR	RBQB1-34/850	90941	15.5
42"	36"	39344-421136OR	RBQB1-36/900	90942	16.5
	40"	39344-421140OR	RBQB1-40/1000	90943	18.3
48"	42	39344-481142OR	RBQB1-42/1050	90944	19.2
	46	39344-481146OR	RBQB1-46/1150	90945	21.0
54"	48	39344-541148OR	RBQB1-48/1200	90946	21.9
	52	39344-541152OR	RBQB1-52/1300	90947	23.8
60"	54	39344-601154OR	RBQB1-54/1350	90948	24.7
	58	39344-601158OR	RBQB1-58/1450	90949	26.5
66"	60	39344-661160OR	RBQB1-60/1500	90950	27.4
72"	64	39344-721164OR	RBQB1-64/1600	90951	29.2
	70	39344-721170OR	RBQB1-70/1750	90952	32.0
78"	72	39344-781172OR	RBQB1-72/1800	90953	32.9

Lead time: 1 working day

Replacement Blade Clamp

ORDERING NUMBER	ITEM CODE	WT. LBS.
QB1PCK	90954	4.8

Lead time: 1 working day

Specifications

SLOT WIDTH	CONSHEAR BLADE HEIGHT	QB#1 BLADE HEIGHT
3/4"	7-1/4"	6-1/2"

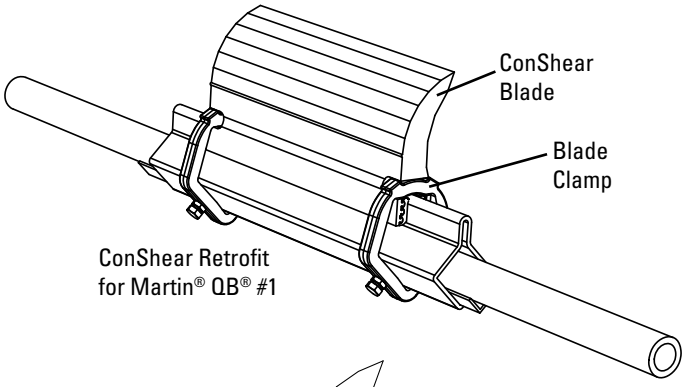

Usable Blade Volume Comparison

BLADE TYPE	BLADE LENGTH	Usable BLADE AREA (cross-section)	Usable BLADE VOLUME
Martin® QB™ #1	28"	5.75 in^2	161.0 in^3
ConShear™	28"	5.50 in^2	154.0 in^3

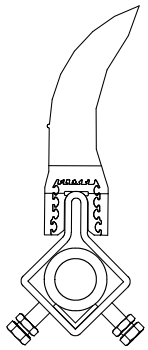

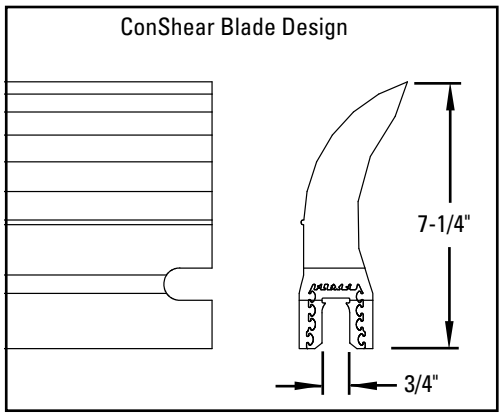

Martin® and QB® #1 are registered trademarks of Martin Engineering, Neponset, IL.

Part Number Cross-Reference Guide

Cross-Reference for Replacement of Martin® QC® Extra Heavy-Duty Blades

Ordering Information

BELT WIDTH		BLADE WIDTH		MARTIN QC XHD PART NUMBER	ORDERING NUMBER	ITEM CODE	WT. LBS.
in.	mm	in.	mm				
24	600	18	450	35897-2411	TRB18	76485	21.0
30	750	24	600	35897-3011	TRB24	76486	28.0
36	900	30	750	35897-3611	TRB30	76487	35.0
42	1050	36	900	35897-4211	TRB36	76488	42.0
48	1200	42	1050	35897-4811	TRB42	76489	49.0
54	1350	48	1200	35897-5411	TRB48	76490	56.0
60	1500	54	1350	35897-6011	TRB54	76491	63.0
66	1650	60	1500	35897-6611	TRB60	76492	70.0
72	1800	66	1650	35897-7211	TRB66	76493	77.0
78	1950	72	1800	35897-7811	TRB72	76494	87.0
84	2100	78	1950	35897-8411	TRB78	76697	91.0
90	2250	84	2100	35897-9011	TRB84	77047	98.0
96	2400	90	2250	35897-9611	TRB90	77048	105.0

Additional blade sizes are available upon request. Call for pricing.
NOTE: Blade coverage is 6 inches less than belt width.
Lead time: 1 working day

Replacement Blade Pin

ORDERING NUMBER	ITEM CODE	WT. LBS.
MMPBPK	76466	0.8

Lead time: 1 working day

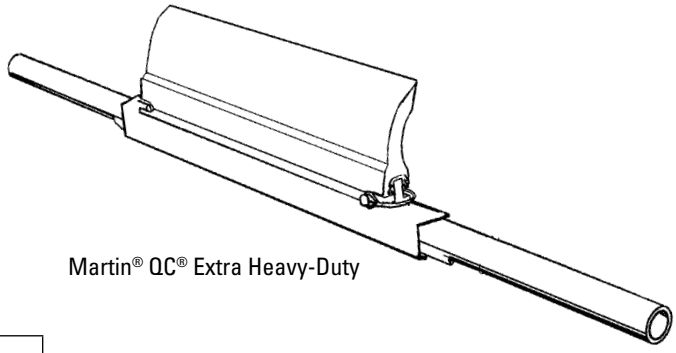

Martin® QC® Extra Heavy-Duty

Specifications

SLOT WIDTH	POLE PLATE THICKNESS	TUFFSHEAR BLADE HEIGHT	QC XHD BLADE HEIGHT
13/16"	3/4"	10-1/8" (257mm)	12-3/8" (314mm)

Usable Blade Volume Comparison

BLADE TYPE	BLADE LENGTH	Usable BLADE AREA (cross-section)	Usable BLADE VOLUME
Martin® QC™ XHD	30"	17.01 in^2	510.3 in^3
TuffShear™	30"	12.08 in^2	362.7 in^3

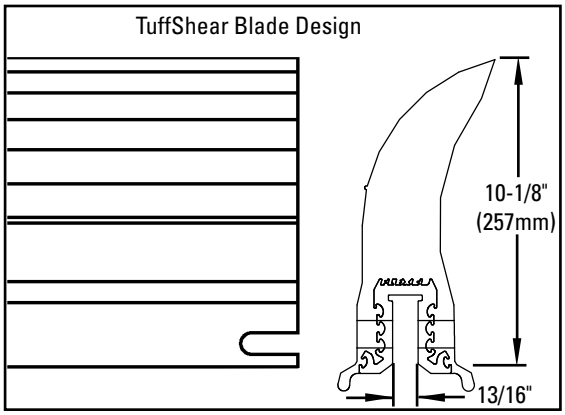

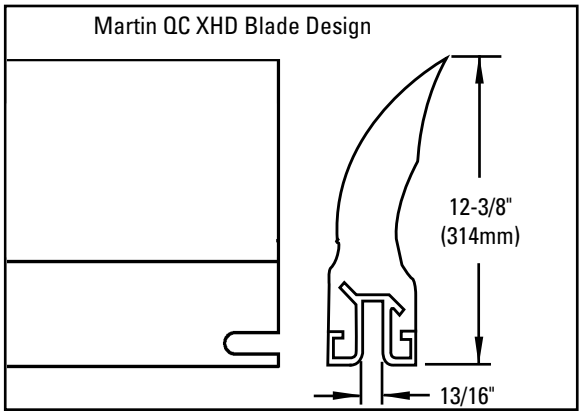

Martin® and QC® #1 are registered trademarks of Martin Engineering, Neponset, IL.

Part Number Cross-Reference Guide

Cross-Reference for Replacement of Arch-Gordon Saber® Primary Blades

Ordering Information

BELT WIDTH	ACTUAL BLADE LENGTH	ARCH/GORDON PART NUMBER	ORDERING NUMBER	CONSHEAR™ ITEM CODE	WT. LBS.
18"	16"	MRBSB000180000	RBAGS-16	75995	7.3
18"	18"	MRBSB00018F000	RBAGS-18	76967	8.2
24"	22"	MRBSB000240000	RBAGS-22	75996	10.1
24"	24"	MRBSB00024F000	RBAGS-24	76968	11.0
30"	28"	MRBSB000300000	RBAGS-28	75997	12.8
30"	30"	MRBSB00030F000	RBAGS-30	76969	13.7
36"	34"	MRBSB000360000	RBAGS-34	75998	15.5
36"	36"	MRBSB00036F000	RBAGS-36	76970	16.5
42"	40"	MRBSB000420000	RBAGS-40	75999	18.3
42"	42"	MRBSB00042F000	RBAGS-42	76971	19.2
48"	46"	MRBSB000480000	RBAGS-46	76028	21.0
48"	48"	MRBSB00048F000	RBAGS-48	76972	21.9
54"	52"	MRBSB000540000	RBAGS-52	76029	23.8
54"	54"	MRBSB00054F000	RBAGS-54	76973	24.7
60"	58"	MRBSB000600000	RBAGS-58	76030	26.5
60"	60"	MRBSB00060F000	RBAGS-60	76974	27.4
72"	70"	MRBSB000720000	RBAGS-70	76031	32.0
72"	72"	MRBSB00072F000	RBAGS-72	76975	32.9
84"	84"	MRBSB00084F000	RBAGS-84	76976	38.4

Additional blade sizes are available upon request. Call for pricing.
Lead time: 1 working day
NOTE: Also works on Falcon Primary Cleaners (Canada).

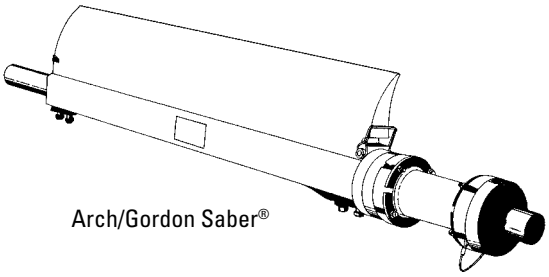

Replacement Blade Pin

ORDERING NUMBER	ITEM CODE	WT. LBS.
EZP1BP	75642	0.1

Lead time: 1 working day

ConShear-LS for Arch/Gordon Mini-Saber Blades

BELT WIDTH		BLADE WIDTH		ARCH/GORDON PART NUMBER	ORDERING NUMBER	CONSHEAR-LS ITEM CODE	WT. LBS.
in.	mm	in.	mm				
18	450	16	400	MRBMN00018	RBAGM-16	77106	3.3
24	600	22	550	MRBMN00024	RBAGM-22	77107	4.6
30	750	28	700	MRBMN00030	RBAGM-28	77108	5.8
36	900	34	850	MRBMN00036	RBAGM-34	77109	7.1
42	1050	40	1000	MRBMN00042	RBAGM-40	77110	8.3
48	1200	46	1150	MRBMN00048	RBAGM-46	77111	9.6

Additional sizes are available upon request. Call for pricing.

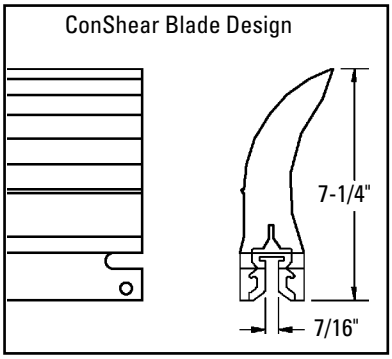

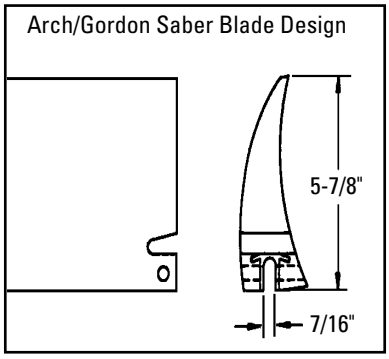

Specifications

SLOT WIDTH	POLE PLATE THICKNESS	CONSHEAR BLADE HEIGHT	SABER BLADE HEIGHT
7/16"	3/8"	7-1/4"	5-7/8"

Usable Blade Volume Comparison

BLADE TYPE	BLADE LENGTH	Usable BLADE AREA (cross-section)	Usable BLADE VOLUME
Arch/Gordon Saber®	28"	3.06 in^2	85.7 in^3
ConShear™	28"	5.50 in^2	154.0 in^3

Saber® is a registered trademark of Arch Environmental Equipment Inc., Paducah, KY.

Part Number Cross-Reference Guide

Cross-Reference for Replacement of Arch/Gordon Saber™ (SCM) Channel Mount Blades

Ordering Information

BELT WIDTH	ACTUAL BLADE LENGTH	ARCH/GORDON PART NUMBER	ARCH/GORDON OLD PART NUMBER	ORDERING NUMBER	CONSHEAR™ ITEM CODE	WT. LBS.
18"	16"	MRBCM00018	SCM-016-18	RBAGSCM-16	76572	7.3
24"	22"	MRBCM00024	SCM-016-24	RBAGSCM-22	76573	10.1
30"	28"	MRBCM00030	SCM-016-30	RBAGSCM-28	76574	12.8
36"	34"	MRBCM00036	SCM-016-36	RBAGSCM-34	76575	15.5
42"	40"	MRBCM00042	SCM-016-42	RBAGSCM-40	76576	18.3
48"	46"	MRBCM00048	SCM-016-48	RBAGSCM-46	76577	21.0
54"	52"	MRBCM00054	SCM-016-54	RBAGSCM-52	76578	23.8
60"	58"	MRBCM00060	SCM-016-60	RBAGSCM-58	76579	26.5
72"	70"	MRBCM00072	SCM-016-72	RBAGSCM-70	76581	32.0

Additional blade sizes are available upon request. Call for pricing.
NOTE: Blade coverage is 2 inches less than belt width.

Replacement Blade Pin

ORDERING NUMBER	ITEM CODE	WT. LBS.
EZP1BP	75642	0.1

Lead time: 1 working day

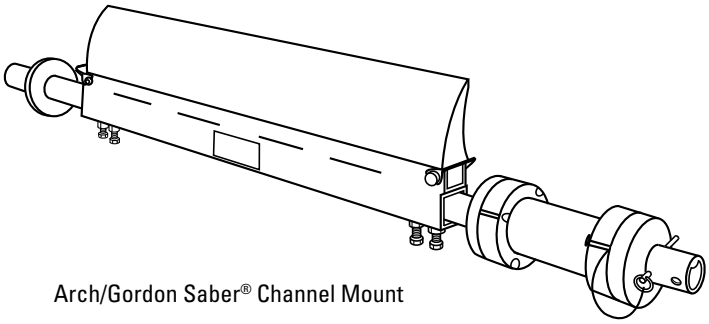

Arch/Gordon Saber® Channel Mount

Specifications

BASE WIDTH	CONSHEAR BLADE HEIGHT	CHANNEL MOUNT BLADE HEIGHT
1-7/16"	7-1/4"	5-3/4"

Usable Blade Volume Comparison

BLADE TYPE	BLADE LENGTH	Usable BLADE AREA (cross-section)	Usable BLADE VOLUME
Arch/Gordon Saber® Channel Mount	28"	3.06 in^2	85.7 in^3
ConShear™	28"	5.50 in^2	154.0 in^3

ConShear Blade Design

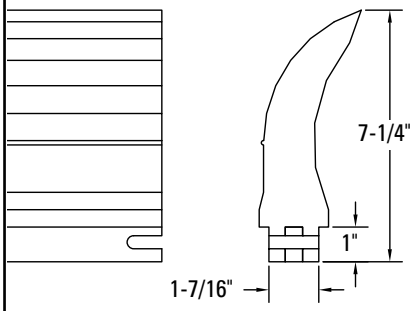

Arch/Gordon Saber Channel Mount Blade Design

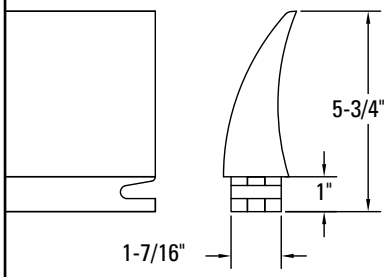

Saber® is a registered trademark of Arch Environmental Equipment Inc., Paducah, KY.

Part Number Cross-Reference Guide

Cross-Reference for Replacement of Superior Exterra® Blades

Ordering Information

BELT WIDTH	ACTUAL BLADE LENGTH	SUPERIOR EXTERRA® PART NUMBER	ORDERING NUMBER	CONSHEAR™ ITEM CODE	WT. LBS.
12"	10"	07-00540	RBSE-10	79861	4.6
18"	16"	07-00541	RBSE-16	79862	7.3
24"	22"	07-00542	RBSE-22	79863	10.1
30"	28"	07-00543	RBSE-28	79864	12.8
36"	34"	07-00544	RBSE-34	79865	15.5
42"	40"	07-00545	RBSE-40	79866	18.3
48"	46"	07-00546	RBSE-46	79867	21.0
54"	52"	07-00547	RBSE-52	79868	23.8
60"	58"	07-00549	RBSE-58	79869	26.5
66"	64"	07-00548	RBSE-64	79870	29.3
72"	70"	07-00550	RBSE-70	79871	32.0

Additional blade sizes are available upon request. Call for pricing.
NOTE: Blade coverage is 2 inches less than belt width.
Lead time: 3 working days

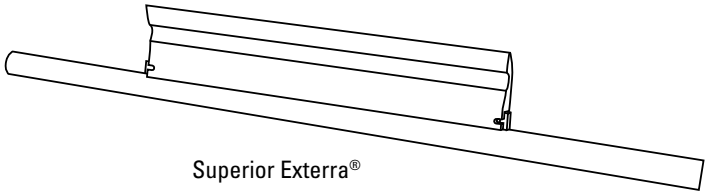

Superior Exterra®

Specifications

SLOT WIDTH	POLE PLATE THICKNESS	CONSHEAR BLADE HEIGHT	EXTERRA BLADE HEIGHT
7/16"	3/8"	7-1/4"	6-11/16"

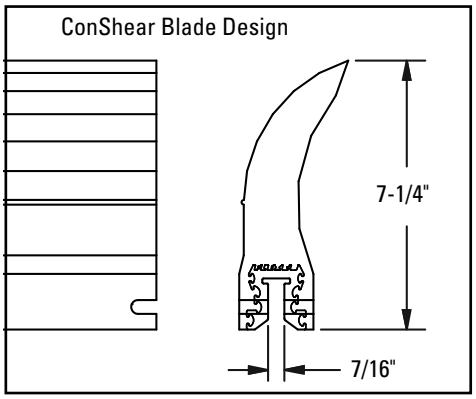

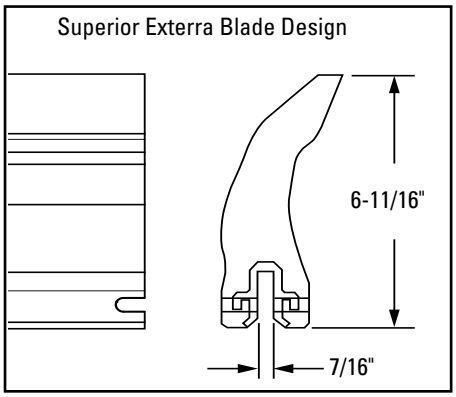

Exterra® is a registered trademark of Superior Industries, Inc. Morris, MN

Part Number Cross-Reference Guide

*Cross-Reference for Replacement of ASGCO® Skalper® III and IV Blades**

Ordering Information

BELT WIDTH	ACTUAL BLADE LENGTH	ASGCO® PART NUMBER	ORDERING NUMBER	CONSHEAR™ ITEM CODE	WT. LBS.
18"	18"	ASG-SK4-18A	RBAS4-18	76032	8.3
24"	24"	ASG-SK4-24A	RBAS4-24	76033	11.0
30"	30"	ASG-SK4-30A	RBAS4-30	76034	13.8
36"	36"	ASG-SK4-36A	RBAS4-36	76035	16.6
42"	42"	ASG-SK4-42A	RBAS4-42	76036	19.3
48"	48"	ASG-SK4-48A	RBAS4-48	76037	22.1
54"	54"	ASG-SK4-54A	RBAS4-54	76038	24.8
60"	60"	ASG-SK4-60A	RBAS4-60	76039	27.6
72"	72"	ASG-SK4-72A	RBAS4-72	76040	33.1

Additional blade sizes are available upon request. Call for pricing.
NOTE: Blade coverage is the same as the belt width.
Blade design is identical to Argonics replacement blade, except for length. Can be interchanged.
*Also interchangeable with ASGCO® Skalper® III Blades.
Lead time: 1 working day

Replacement Blade Pin

ORDERING NUMBER	ITEM CODE	WT. LBS.
RB38BP	79481	0.2

Lead time: 1 working day

Specifications

SLOT WIDTH	POLE PLATE THICKNESS	CONSHEAR BLADE HEIGHT	SKALPER BLADE HEIGHT
9/16"	1/2"	7-1/4"	6-5/8"

Usable Blade Volume Comparison

BLADE TYPE	BLADE LENGTH	Usable BLADE AREA (cross-section)	Usable BLADE VOLUME
ASGCO® Skalper® IV	28"	3.29 in^2	92.1 in^3
ConShear™	28"	5.50 in^2	154.0 in^3

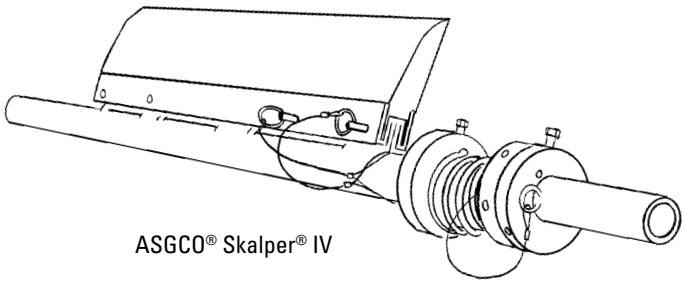

ASGCO® Skalper® IV

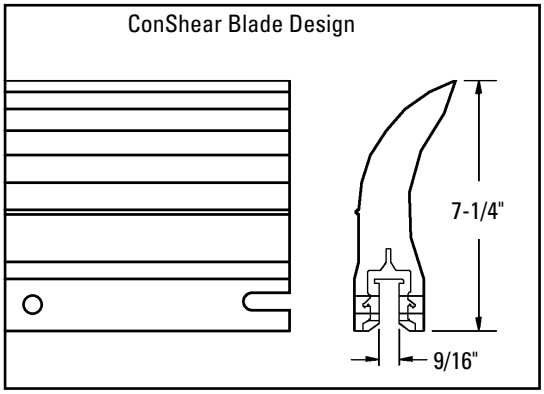

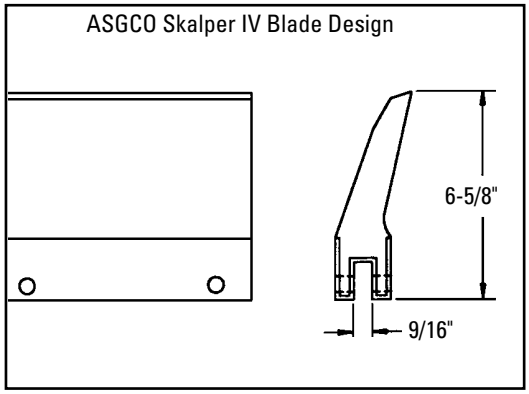

ASGCO® and Skalper® are registered trademarks of ASGCO Mfg, Inc., Allentown, PA.

Part Number Cross-Reference Guide

Cross-Reference for Replacement of Argonics™ Raptor™ Blades

Ordering Information

BELT WIDTH	ACTUAL BLADE LENGTH	ARGONICS PART NUMBER	ORDERING NUMBER	CONSHEAR™ ITEM CODE	WT. LBS.
12"	10"	CP-RE-10-G83	RBAER-10	76041	4.6
18"	16"	CP-RE-16-G83	RBAER-16	76042	7.3
24"	22"	CP-RE-22-G83	RBAER-22	76043	10.1
30"	28"	CP-RE-28-G83	RBAER-28	76044	12.8
36"	34"	CP-RE-34-G83	RBAER-34	76045	15.5
42"	40"	CP-RE-40-G83	RBAER-40	76046	18.3
46"	44"	CP-RE-44-G83	RBAER-44	76655	20.1
48"	46"	CP-RE-46-G83	RBAER-46	76047	21.0
54"	52"	CP-RE-52-G83	RBAER-52	76048	23.8
60"	58"	CP-RE-58-G83	RBAER-58	76049	26.5
72"	70"	CP-RE-70-G83	RBAER-70	76050	32.0

Additional blade sizes are available upon request. Call for pricing.
NOTE: Blade coverage is 2 inches less than the belt width.
Blade design is identical to ASGCO replacement blade, except for length. Can be interchanged.
Lead time: 1 working day

Replacement Blade Pin

ORDERING NUMBER	ITEM CODE	WT. LBS.
RB38BP	79481	0.2

Lead time: 1 working day

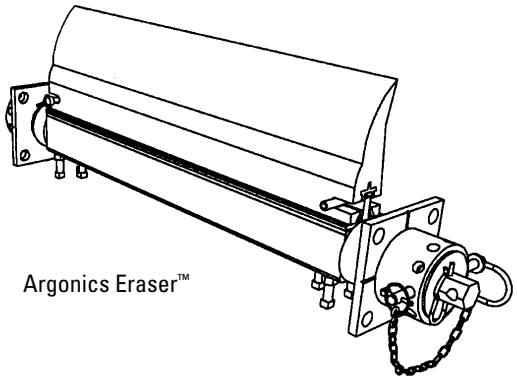

Argonics Eraser™

Specifications

SLOT WIDTH	POLE PLATE THICKNESS	CONSHEAR BLADE HEIGHT	RAPTOR BLADE HEIGHT
9/16"	1/2"	7-1/4"	7-1/4"

Usable Blade Volume Comparison

BLADE TYPE	BLADE LENGTH	Usable BLADE AREA (cross-section)	Usable BLADE VOLUME
Argonics™ Raptor™	28"	4.25 in^2	119.0 in^3
ConShear™	28"	5.50 in^2	154.0 in^3

ConShear Blade Design

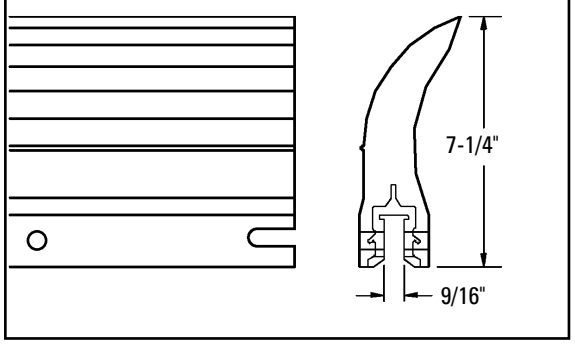

Argonics Raptor Blade Design

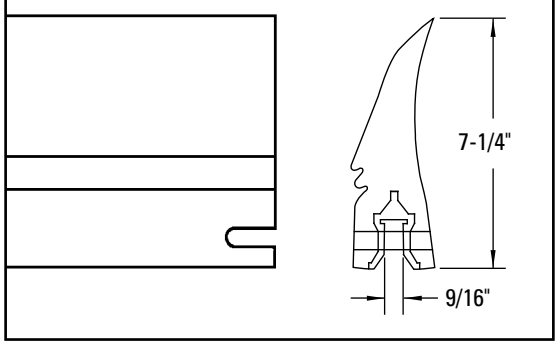

Eraser™ and Raptor™ are registered trademarks of Argonics, Inc., Marquette, MI.

Part Number Cross-Reference Guide

Cross-Reference for Replacement of Stephens-Adamson Metso/Trellex Blades

Ordering Information

ACTUAL BLADE LENGTH	SA PART NUMBER	ORDERING NUMBER	CONSHEAR™ ITEM CODE	WT. LBS.
6"	ABC90	RB6SA	76570	3.1

Blades fit into cartridge that mounts on the pole.
Lead time: 1 working day

Cleaner Blades Required Per Belt Width

in.	18	24	30	36	42	48	54	60	72
mm	450	600	750	900	1050	1200	1350	1500	1800
Blades Required	2	3	4	5	6	7	8	9	11

NOTE: Blade coverage is 6 inches less than the belt width.

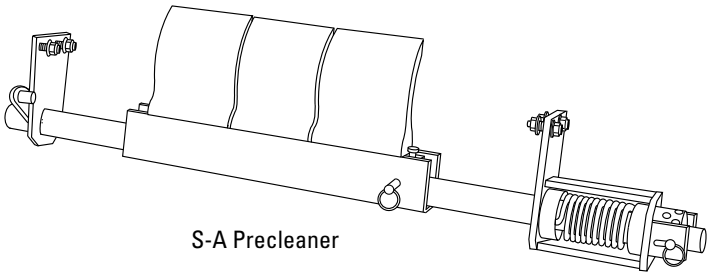

S-A Precleaner

Specifications

BASE WIDTH	BASE HEIGHT	CONSHEAR BLADE HEIGHT	S-A BLADE HEIGHT
1.96"	.78"	8"	8"

Usable Blade Volume Comparison

BLADE TYPE	BLADE LENGTH	Usable BLADE AREA (cross-section)	Usable BLADE VOLUME
S-A Metso/Trellex	6"	3.88 in^2	22.8 in^3
ConShear™	6"	5.50 in^2	33.0 in^3

ConShear Blade Design

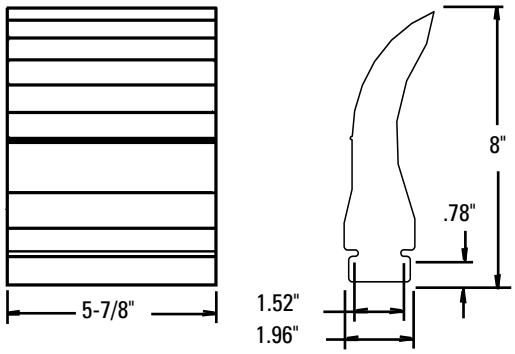

S-A Standard Blade Design

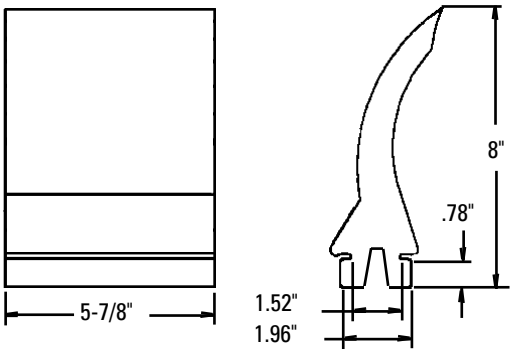

Part Number Cross-Reference Guide

Cross-Reference for Replacement of Martin® Durt Hawg® Precleaner Blades

Ordering Information

ACTUAL BLADE LENGTH	MARTIN® PART NUMBER	ORDERING NUMBER	CONSHEAR™ ITEM CODE	WT. LBS.
6"	27987-C	RB6DH	76571	3.3

Lead time: 1 working day

Cleaner Blades Required Per Belt Width

in.	18	24	30	36	42	48	54	60	72
mm	450	600	750	900	1050	1200	1350	1500	1800
Blades Required	2	3	4	5	6	7	8	9	11

NOTE: Blade coverage is 6 inches less than the belt width.

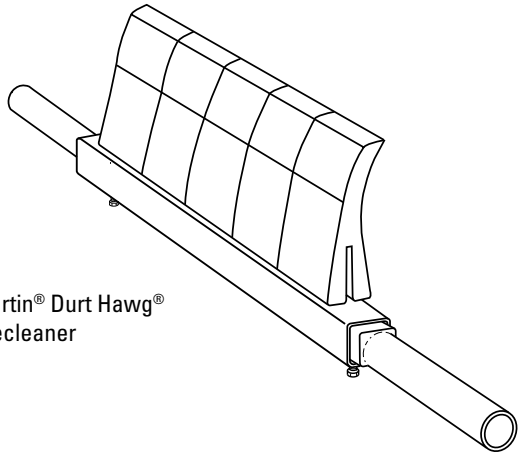

Martin® Durt Hawg® Precleaner

Specifications

SLOT WIDTH	CONSHEAR BLADE HEIGHT	DURT HAWG BLADE HEIGHT
1/4"	8"	8 1/4"

Usable Blade Volume Comparison

BLADE TYPE	BLADE LENGTH	Usable BLADE AREA (cross-section)	Usable BLADE VOLUME
Martin® Durt Hawg	6"	3.80 in^2	22.2 in^3
ConShear™	6"	5.50 in^2	33.0 in^3

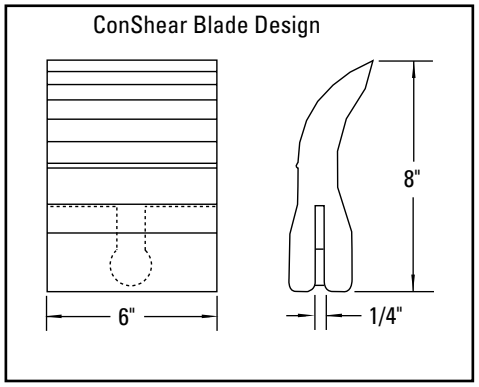

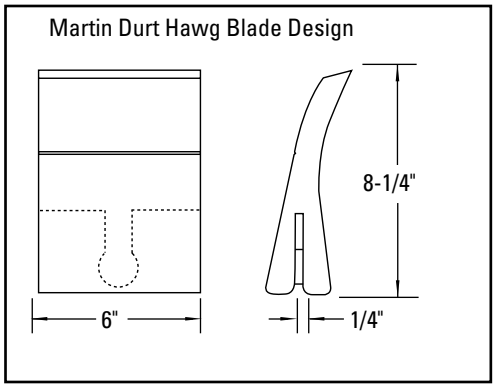

Martin® and Durt Hawg® are registered trademarks of Martin Engineering, Neponset, IL.

Part Number Cross-Reference Guide

Cross-Reference for Replacement of Martin® Durt Tracker® Precleaner Blades SD 6

Ordering Information

BLADE WIDTH	MARTIN® PART NUMBER	ORDERING NUMBER	ITEM CODE	WT. LBS.
6″ (152mm)	30333-06XX	RBDT-6C	90614	3.2

Lead time: 1 working day

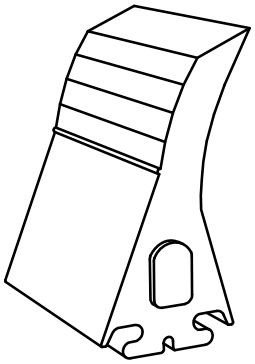

Martin® Durt Tracker®
Replacement Blade

Specifications

BLADE TYPE	BLADE WIDTH	BLADE HEIGHT
SD 6	6″ (152mm)	7 1/2" (190mm)

Usable Blade Volume

BLADE TYPE	BLADE WIDTH	Usable BLADE AREA (cross-section)	Usable BLADE VOLUME
Martin® Durt Tracker® SD 6 Retrofit Blade	6" (152mm)	3.7 in^2 (.00239m^2)	22.3 in^3 (.00037m^2)

Martin® Durt Tracker® SD 6 Retrofit Blade

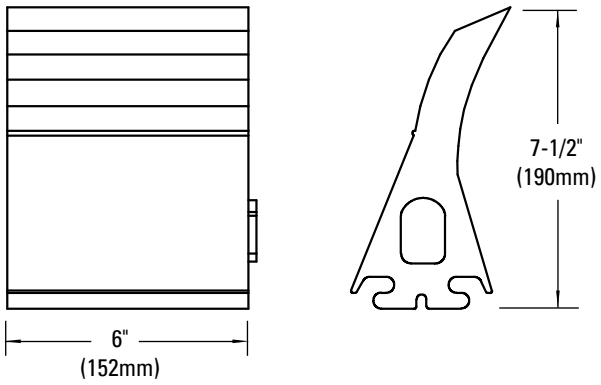

Martin® and Durt Tracker® are registered trademarks of Martin Engineering, Neponset, IL.

Part Number Cross-Reference Guide

Cross-Reference for Replacement of Martin® Durt Tracker® XHD Precleaner Blades XHD 6.5 & XHD 13

Ordering Information

BLADE WIDTH	ORDERING NUMBER	ITEM CODE	WT. LBS.
6.5" (165mm)	RBDTXHD-6.5C	77517	6.5
13" (330mm)	RBDTXHD-13C	90615	13.1

Lead time: 1 working day

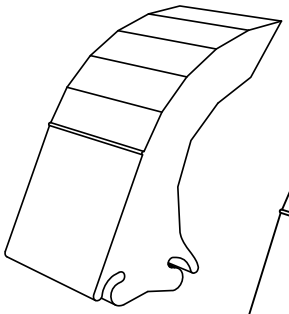

Martin® Durt Tracker®
XHD 6.5 Replacement Blade

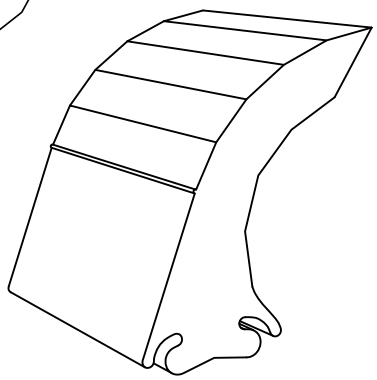

Martin® Durt Tracker®
XHD 13 Replacement Blade

Specifications

BLADE TYPE	BLADE WIDTH	BLADE HEIGHT
XHD 6.5	6.5" (165mm)	9 1/2" (241mm)
XHD 13	13" (330mm)	

Usable Blade Volume

BLADE TYPE	BLADE WIDTH	Usable BLADE AREA (cross-section)	Usable BLADE VOLUME
Martin® Durt Tracker® XHD 6.5 Retrofit Blade	6.5" (165mm)	12.1 in^2 (.00781m^2)	78 in^3 (.00128m^3)
Martin® Durt Tracker® XHD 13 Retrofit Blade	13" (330mm)		156 in^3 (.00256m^3)

Martin® Durt Tracker® XHD Retrofit Blade

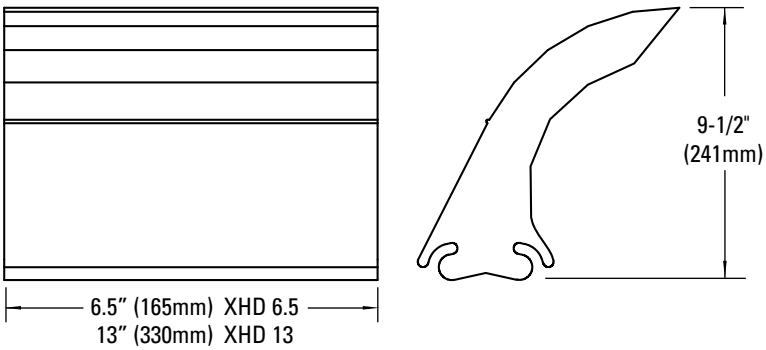

Martin® and Durt Tracker® are registered trademarks of Martin Engineering, Neponset, IL.

Product Ordering Information

V-Plow*

SIZE	BELT WIDTH in.	BELT WIDTH mm	ORDERING NUMBER	ITEM CODE	WT. LBS.
Extra Small	18-24	450-600	CBV-XS	73131	53.0
Small	30-36	750-900	CBV-S	73132	65.0
Medium	42-48	1050-1200	CBV-M	73133	74.0
Large	54-60	1350-1500	CBV-L	73134	84.0
72"	72	1800	CBV-72	74389	150.0
84"	84	2100	CBV-84	74390	175.0
96"	96	2400	CBV-96	74391	200.0

*Use next larger size for belt widths between ranges.
Lead time: 1 working day

Replacement Blade Kits**

SIZE	BELT WIDTH in.	BELT WIDTH mm	ORDERING NUMBER	ITEM CODE	WT. LBS.
Extra Small	18-24	450-600	VBK-XS	73190	4.5
Small	30-36	750-900	VBK-S	73191	6.0
Medium	42-48	1050-1200	VBK-M	73192	7.5
Large	54-60	1350-1500	VBK-L	73193	9.0
72"	72	1800	VBK-72	74457	13.0
84"	84	2100	VBK-84	74458	15.0
96"	96	2400	VBK-96	74459	17.0

**Kit includes blades and replacement blade bolts.
Lead time: 1 working day

Optional Polyurethane Blade Kits**

Typically provides 3 to 5 times longer wear life. PU blades are blue in color.

SIZE	BELT WIDTH in.	BELT WIDTH mm	ORDERING NUMBER	ITEM CODE	WT. LBS.
Extra Small	18-24	450-600	VUBK-XS	75570	5.4
Small	30-36	750-900	VUBK-S	75571	8.0
Medium	42-48	1050-1200	VUBK-M	75572	10.5
Large	54-60	1350-1500	VUBK-L	75573	13.0
72"	72	1800	VUBK-72	75574	15.9
84"	84	2100	VUBK-84	75575	18.5
96"	96	2400	VUBK-96	75576	21.0

**Kit includes blades and replacement blade bolts.
Lead time: 1 working day

Shaded items are made to order.
Lead time: 10 working days

Product Notes:

- Exclusive blade design – 20° slant on leading edge spirals debris off the belt.
- Self-adjusting blade – the blade floats on the belt and self-adjusts as it wears.
- Unique blade adjuster – turnbuckle-type adjuster allows the blade to be accurately positioned to the belt.
- Easy to install – comes fully assembled and can be placed right into position on the conveyor.

Product Ordering Information

Diagonal Plows*

SIZE	BELT WIDTH in.	BELT WIDTH mm	ORDERING NUMBER	ITEM CODE	WT. LBS.
Small	18-30	450-750	RDP1-S	74692	45.0
Medium	36-42	900-1050	RDP1-M	74693	56.0
Large	48-60	1200-1500	RDP1-L	74694	70.0
Extra Large	72-84	1800-2100	RDP1-XL	74695	96.0

*Use next larger size for belt widths between ranges.
Lead time: 1 working day

Replacement Blade Kits**

SIZE	BELT WIDTH in.	BELT WIDTH mm	ORDERING NUMBER	ITEM CODE	WT. LBS.
Small	18-30	450-750	RDPBK-S	74699	4.0
Medium	36-42	900-1050	RDPBK-M	74700	5.6
Large	48-60	1200-1500	RDPBK-L	74701	8.4
Extra Large	72-84	1800-2100	RDPBK-XL	74702	12.0

**Kit includes blade and replacement blade bolts.
Lead time: 1 working day

Product Notes:

- A belt cleaner for the tail pulley. Prevents damage to the belt, pulley, lagging, and belt splice.
- Keeps fugitive materials off the inside of the belt and out of the tail pulley.
- Installed at a 45° angle across the belt to discharge material to one predetermined side.
- The blade is installed in a fixed position, eliminating any bouncing problems.
- Exclusive 20° angled blade quickly spirals material off the belt.

Specifications & Guidelines

V-Plow
Belt Width Specifications

SIZE	BELT WIDTH (Min-Max) in.	BELT WIDTH (Min-Max) mm
Extra Small	18-24	450-600
Small	30-36	750-900
Medium	42-48	1050-1200
Large	54-60	1350-1500
72"	72	1800
84"	84	2100
96"	96	2400

Use next larger size for belt widths between ranges.

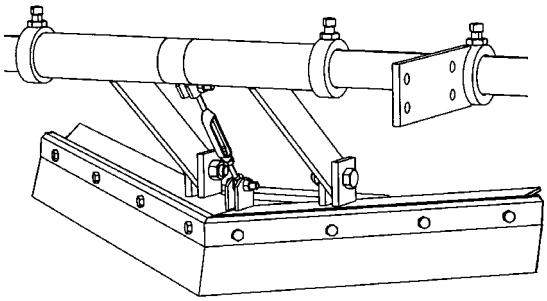

Diagonal Plow
Belt Width Specifications

SIZE	BELT WIDTH (Min-Max) in.	BELT WIDTH (Min-Max) mm
Small	18-30	450-750
Medium	36-42	900-1050
Large	48-60	1200-1500
Extra Large	72-84	1800-2100

Use next larger size for belt widths between ranges.

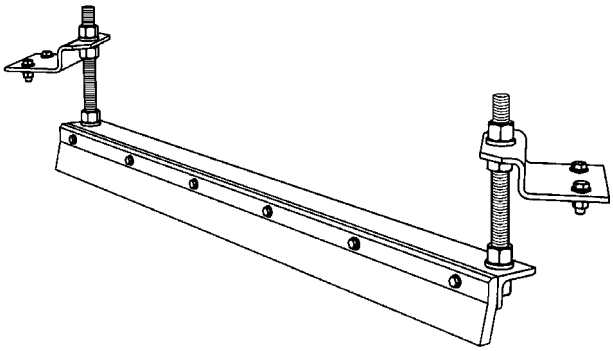

Application Guidelines

- Belt Splice ..... Mechanically Fastened/Vulcanized
- Belt Speed ..... 1000 FPM (5M/sec) for V-Plow; 700 FPM (3.5M/sec) for Diagonal Plow
- Belt Direction ..... One Way

V-Plow & Diagonal Plow
Blade Specifications

Material	UHMWPE
Durometer	67-D
Working Temperature	
°F	-40° to 160°
°C	-40° to 71°
Grease & Chemical Resistance	Excellent
Sticky Material Performance	Excellent

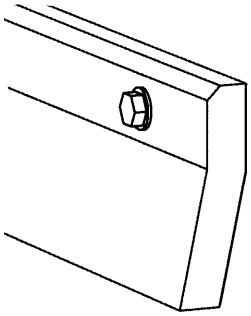

Replacement Parts Lists

Replacement Parts - V-Plow

REF	DESCRIPTION	BELT WIDTH (Min-Max) in.	BELT WIDTH (Min-Max) mm	ORDERING NUMBER	ITEM CODE	WT. LBS.
1	V-Plow Pole XS	18-24	450-600	VPXS	73400	13.0
	V-Plow Pole S	30-36	750-900	VPS	73408	15.0
	V-Plow Pole M	42-48	1050-1200	VPM	73409	18.0
	V-Plow Pole L	54-60	1350-1500	VPL	73410	21.0
	V-Plow Pole 72	72	1800	VP72	74395	24.0
	V-Plow Pole 84	84	2100	VP84	74396	27.0
	V-Plow Pole 96	96	2400	VP96	74397	30.0
2	V-Plow Mainframe XS	18-24	450-600	VMFXS	73535	12.0
	V-Plow Mainframe S	30-36	750-900	VMFS	73549	15.0
	V-Plow Mainframe M	42-48	1050-1200	VMFM	74037	22.0
	V-Plow Mainframe L	54-60	1350-1500	VMFL	74038	28.0
	V-Plow Mainframe 72	72	1800	VMF72	74398	35.0
	V-Plow Mainframe 84	84	2100	VMF84	74399	42.0
	V-Plow Mainframe 96	96	2400	VMF96	74440	50.0
3	VP Main Linkage Kit* (1 ea.)			VMLK	74982	5.0
4	VP Center Sleeve			VCS	73533	1.0
5	V-Plow Adjuster Kit*			VAK	76416	0.5
6	VP Stop Collar* (1 ea.)			VSC	74983	1.0
7	VP Mounting Bracket Kit* (1 ea.)			VMBK	73399	5.0
REPLACEMENT BLADE KITS**						
8	Replacement Blade Kit XS	18-24	450-600	VBK-XS	73190	4.5
	Replacement Blade Kit S	30-36	750-900	VBK-S	73191	6.0
	Replacement Blade Kit M	42-48	1050-1200	VBK-M	73192	7.5
	Replacement Blade Kit L	54-60	1350-1500	VBK-L	73193	9.0
	Replacement Blade Kit 72	72	1800	VBK-72	74457	13.0
	Replacement Blade Kit 84	84	2100	VBK-84	74458	15.0
	Replacement Blade Kit 96	96	2400	VBK-96	74459	17.0

*Hardware included
**Kit includes blades and replacement blade bolts.
Lead time: 1 working day

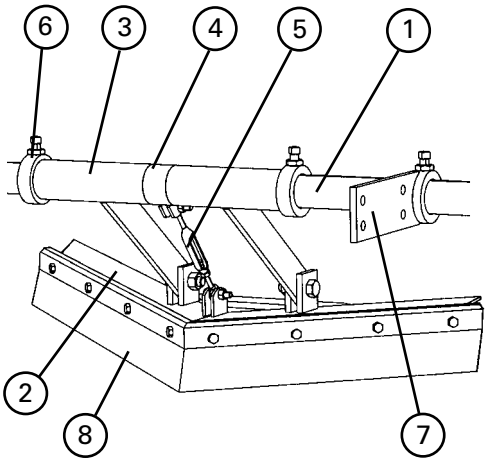

Shaded items are made to order.
Lead time: 10 working days

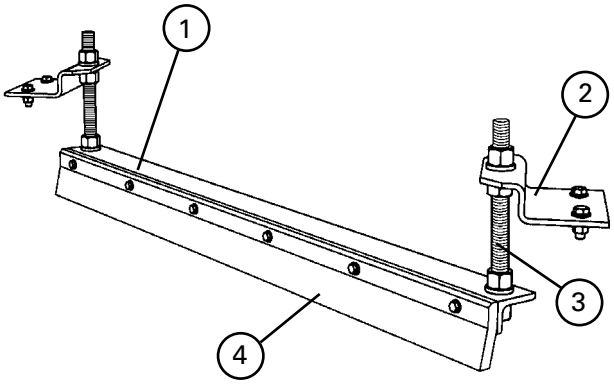

Replacement Parts - Diagonal Plow

REF	DESCRIPTION	BELT WIDTH (Min-Max) in.	BELT WIDTH (Min-Max) mm	ORDERING NUMBER	ITEM CODE	WT. LBS.
1	Small Plow Frame	18-30	450-750	RDPF-S	75566	18.1
	Medium Plow Frame	36-42	900-1050	RDPF-M	75567	26.3
	Large Plow Frame	48-60	1200-1500	RDPF-L	75568	38.4
	Extra Large Plow Frame	72-84	1800-2100	RDPF-XL	75569	60.7
2	Mounting Bracket Kit* (1 ea.)			RDPMBK	74698	6.1
3	Mounting Shaft Kit* (1 ea.)			RDPMSK	74705	3.6
REPLACEMENT BLADE KITS**						
4	Small Plow Blade Kit	18-30	450-750	RDPBK-S	74699	4.0
	Medium Plow Blade Kit	36-42	900-1050	RDPBK-M	74700	5.6
	Large Plow Blade Kit	48-60	1200-1500	RDPBK-L	74701	8.4
	Extra Large Plow Blade Kit	72-84	1800-2100	RDPBK-XL	74702	12.0

*Hardware included
**Kit includes blades and replacement blade bolts.
Lead time: 1 working day

Easy Solution for Load Zone Problems

- Complete load zone offering with slider beds through impact beds for up to 750 ft-lbs of force.
- No specifying trough angle; each bed is adjustable for 20°, 35° and 45° trough settings (ships at 35° setting).
- Low-profile installation. Because EZ Series beds feature trough wings that are adjustable, they lay flat during installation, providing more clearance.
- Full UHMW slider bars included on outside bar to provide proper sealing and long life.
- Unique Impact Bar Supports protect the impact bars from damage, extending service life. An Anti-Migratory Tab on each support secures the bar and prevents it from sliding in the direction of belt travel.
- All beds are manufactured for mounting holes belt width +9" (225mm), per CEMA. For wider structure, contact Customer Service for special quote.

How to spec the correct slider/impact bed for your conveyor transfer point

Roller Size and CEMA Rating

5" (125mm) ☐ **6" (150mm)** ☐

CEMA **C** ☐ **D** ☐ **E** ☐

Belt Width: _____

Bed Length: 4' (1.2M) ☐ **5' (1.5M)** ☐

Impact Energy Calculation Chart

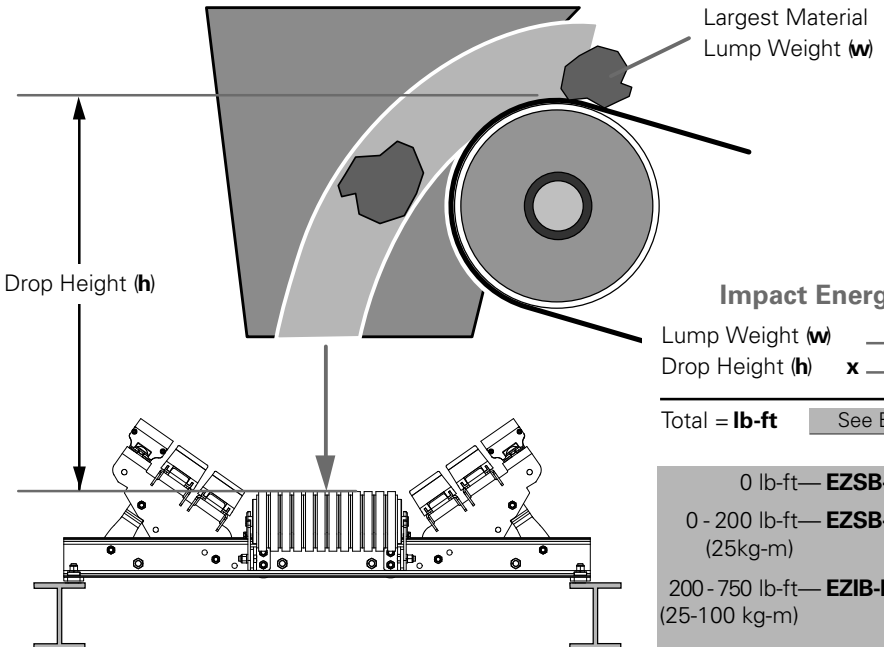

Impact Energy

Lump Weight (**w**) _____

Drop Height (**h**) **x** _____

Total = **lb-ft** See Below

0 lb-ft— **EZSB-C**

0 - 200 lb-ft— **EZSB-I or EZIB-L** (25kg-m)

200 - 750 lb-ft— **EZIB-M** (25-100 kg-m)

Product Ordering Information

Flexco Slider Bed

(for non-impact areas)

BELT WIDTH		TONNAGE RATING (ton/hr)	4' (1.2M) LENGTH			5' (1.5M) LENGTH		
in.	mm		ORDERING NUMBER	ITEM CODE	WT. LBS	ORDERING NUMBER	ITEM CODE	WT. LBS
24	600	–	EZSB24-4C	78855	244.1	EZSB24-5C	78863	261.1
30	750	–	EZSB30-4C	78856	263.2	EZSB30-5C	78864	279.7
36	900	–	EZSB36-4C	78857	289.0	EZSB36-5C	78865	305.5
42	1050	–	EZSB42-4C	78858	358.8	EZSB42-5C	78866	382.9
48	1200	–	EZSB48-4C	78859	385.7	EZSB48-5C	78867	410.4
54	1350	–	EZSB54-4C	78860	455.1	EZSB54-5C	78868	488.0
60	1500	–	EZSB60-4C	78861	478.7	EZSB60-5C	78869	511.6
72	1800	–	EZSB72-4C	78862	513.0	EZSB72-5C	78870	545.9

Lead time: 1 working day

Product Notes:

- CEMA D construction
- No need to specify troughing angle – designed to adjust to 20°, 35°, 45°.
- Designed for containment in the load zone, but not intended for impact zones.
- Slider bars are solid 1" (25mm) UHMW providing longer wear life and consistent load zone sealing.
- Product ships with two rollers. Additional rollers can be added by purchasing an EZRMK and the appropriate corresponding roller.

Adjustable Idler Set

(for non-impact areas)
(for placement in between 3 or more beds or in transitions; Adjusts from 10 - 45° in 5° increments)

BELT WIDTH		ORDERING NUMBER	ITEM CODE	WT. LBS
in.	mm			
24	600	EZAI-24	79000	79.9
30	750	EZAI-30	79001	90.0
36	900	EZAI-36	79002	100.7
42	1050	EZAI-42	79003	110.0
48	1200	EZAI-48	79004	123.3
54	1350	EZAI-54	79005	132.5
60	1500	EZAI-60	79006	141.3
72	1800	EZAI-72	79007	163.6

Lead time: 1 working day
SHIM-KIT-EZAI 91857 - includes two 1/4" and two 1/2" shims

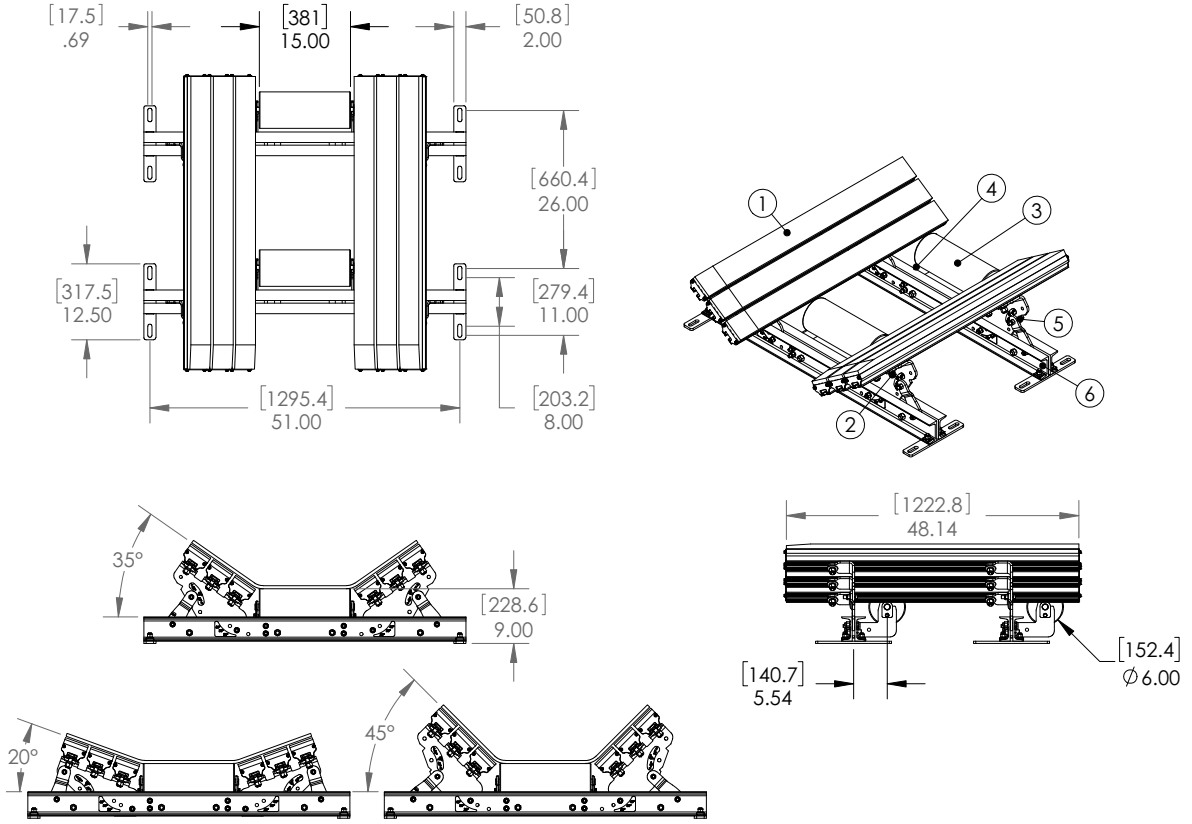

Bed Length 4′ (1.2 M)				Bed Length 5′ (1.5 M)				Bed Width		Dim C		Dim D		Dim E	
Dim A		Dim B		Dim A		Dim B									
in.	mm	in.	mm	in.	mm	in.	mm	in.	mm	in.	mm	in.	mm	in.	mm
26	660.4	48.82	1240	34	863.6	59.06	1500	24	600	33	838	9	229	9	229
								30	750	39	991	9	229	11	279
								36	900	45	1143	9	229	13	330
								42	1050	51	1295	9	229	15	381
								48	1200	57	1448	9	229	17	432
								54	1350	63	1600	9.25	235	19	483
								60	1500	69	1753	9.25	235	21	533
								72	1800	81	2057	9.5	241	25	635

Replacement Parts List

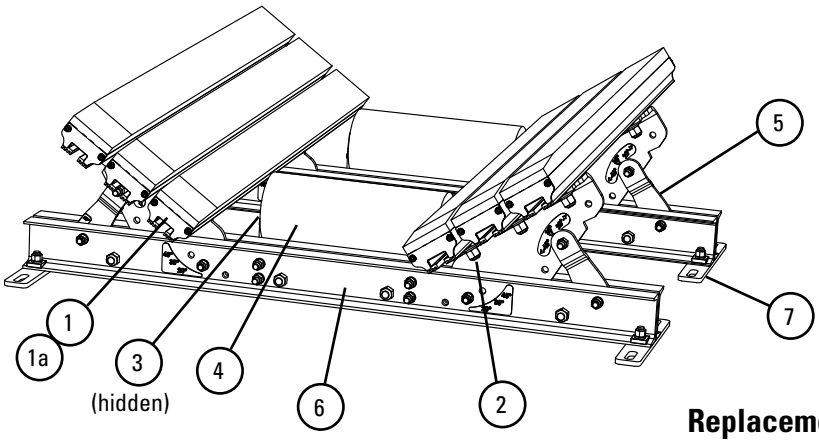

Replacement Parts

REF	DESCRIPTION	ORDERING NUMBER	ITEM CODE	WT. LBS.
1	Slider Bar, 4' (1.2M)	SB4	78789	20.0
1a	Slider Bar, 5' (1.5M)	SB5	78790	24.1
2	Bar Bolt Kit (incl. 1 ea. 5/8" (15mm) carriage bolt, square washer, flat washer, lock washer, Nylock nut)	IBBK	76928	0.5
3	Slider Roll Mount Kit*	EZRMK	78952	5.1
4	Roll 24" (600mm)	RRTD6-24	79874	18.2
	Roll 30" (750mm)	RRTD6-30	79875	21.2
	Roll 36" (900mm)	RRTD6-36	79876	24.6
	Roll 42" (1050mm)	RRTD6-42	79877	27.8
	Roll 48" (1200mm)	RRTD6-48	79878	32.2
	Roll 54" (1350mm)	RRTD6-54	79879	34.0
	Roll 60" (1500mm)	RRTD6-60	79880	36.2
	Roll 72" (1800mm)	RRTD6-72	79881	43.2
5	Wing Plate Kit 24" (600mm)*	EZWPK-24	78970	16.9
	Wing Plate Kit 30" (750mm)*	EZWPK-30	78971	17.4
	Wing Plate Kit 36" (900mm)*	EZWPK-36	78972	21.2
	Wing Plate Kit 42" (1050mm)*	EZWPK-42	78973	26.2
	Wing Plate Kit 48" (1200mm)*	EZWPK-48	78974	30.1
	Wing Plate Kit 54" (1350mm)*	EZWPK-54	78975	35.6
	Wing Plate Kit 60" (1500mm)*	EZWPK-60	78976	39.0
	Wing Plate Kit 72" (1800mm)*	EZWPK-72	78977	46.7
6	Cross Stringer Kit 24" (600mm)*	EZCSK-24	78978	49.2
	Cross Stringer Kit 30" (750mm)*	EZCSK-30	78979	56.5
	Cross Stringer Kit 36" (900mm)*	EZCSK-36	78980	63.8
	Cross Stringer Kit 42" (1050mm)*	EZCSK-42	78981	70.8
	Cross Stringer Kit 48" (1200mm)*	EZCSK-48	78982	78.5
	Cross Stringer Kit 54" (1350mm)*	EZCSK-54	78983	85.8
	Cross Stringer Kit 60" (1500mm)*	EZCSK-60	78984	93.1
	Cross Stringer Kit 72" (1800mm)*	EZCSK-72	78985	99.1
7	Shim Kit Light Duty (incl. 4 shims)	SHIM-KITL	77548	13.6

*Hardware Included

Shim Requirements

IMPACT BED SIZE	CEMA C OR D, 5" (125mm) Idlers	CEMA C OR D, 6" (150mm) IDLERS
24"-36" (600-900mm)	Shim idler up .5" (12.5mm)	No Kits Required
42"-72" (1050-1800mm)	No Kits Required	Use (1) SHIM-KITL; Shim up .5" (12.5mm)

IMPACT BED SIZE	CEMA E, 6" (150mm) IDLERS	CEMA E, 7" (175mm) IDLERS
36"-60" (900-1500mm)	Use (3) SHIM-KITL; Shim up 1.5" (37.5mm)	Use (4) SHIM-KITL; Shim up 2" (50mm)
72" (1800mm)	Use (4) SHIM-KITL; Shim up 2" (50mm)	Use (5) SHIM-KITL; Shim up 2.5" (62.5mm)

Replacement Quantities for EZSB-C

in.		24	30	36	42	48	54	60	72
mm		600	750	900	1050	1200	1350	1500	1800
ROLLS REQUIRED		2	2	2	2	2	2	2	2
BARS REQUIRED	SLIDER	4	4	4	6	6	8	8	8
BAR BOLT KITS REQUIRED		8	8	8	12	12	16	16	16

Product Ordering Information

EZSB-I
Flexco Slider Beds
with Impact Rolls

Flexco Slider Bed with Impact Rolls
(for impact zones with less than 200 lb-ft energy)

BELT WIDTH		TONNAGE RATING (ton/hr)	4' (1.2M) LENGTH			5' (1.5M) LENGTH*		
in.	mm		ORDERING NUMBER	ITEM CODE	WT. LBS	ORDERING NUMBER	ITEM CODE	WT. LBS
24	600	3500	EZSB24-4I	78871	277.0	EZSB24-5I	78879	294.1
30	750	3500	EZSB30-4I	78872	300.0	EZSB30-5I	78880	317.1
36	900	4100	EZSB36-4I	78873	330.1	EZSB36-5I	78881	347.2
42	1050	4500	EZSB42-4I	78874	407.1	EZSB42-5I	78882	433.0
48	1200	4500	EZSB48-4I	78875	437.0	EZSB48-5I	78883	463.0
54	1350	4500	EZSB54-4I	78876	514.0	EZSB54-5I	78884	548.8
60	1500	4500	EZSB60-4I	78877	543.0	EZSB60-5I	78885	577.9
72	1800	4500	EZSB72-4I	78878	586.0	EZSB72-5I	78886	620.2

Lead time: 1 working day
* 5' (1.5M) beds come with 5 impact rolls

Product Notes:
- CEMA D construction
- No need to specify troughing angle – designed to adjust to 20°, 35°, 45°.
- Outermost trough bar features 1" (25mm) solid UHMW slider bar to provide longer wear life and consistent load zone sealing where impact is not present.

Adjustable Idler Set with Impact Rolls
(for placement in between 3 or more beds or in transitions; Adjusts from 10 - 45° in 5° increments)

BELT WIDTH		ORDERING NUMBER	ITEM CODE	WT. LBS
in.	mm			
24	600	EZAI-24I	79091	89.9
30	750	EZAI-30I	79092	100.0
36	900	EZAI-36I	79093	110.7
42	1050	EZAI-42I	79094	120.0
48	1200	EZAI-48I	79095	133.3
54	1350	EZAI-54I	79096	142.5
60	1500	EZAI-60I	79097	151.3
72	1800	EZAI-72I	79098	173.6

Lead time: 1 working day
SHIM-KIT-EZAI 91857 - includes two 1/4" and two 1/2" shims

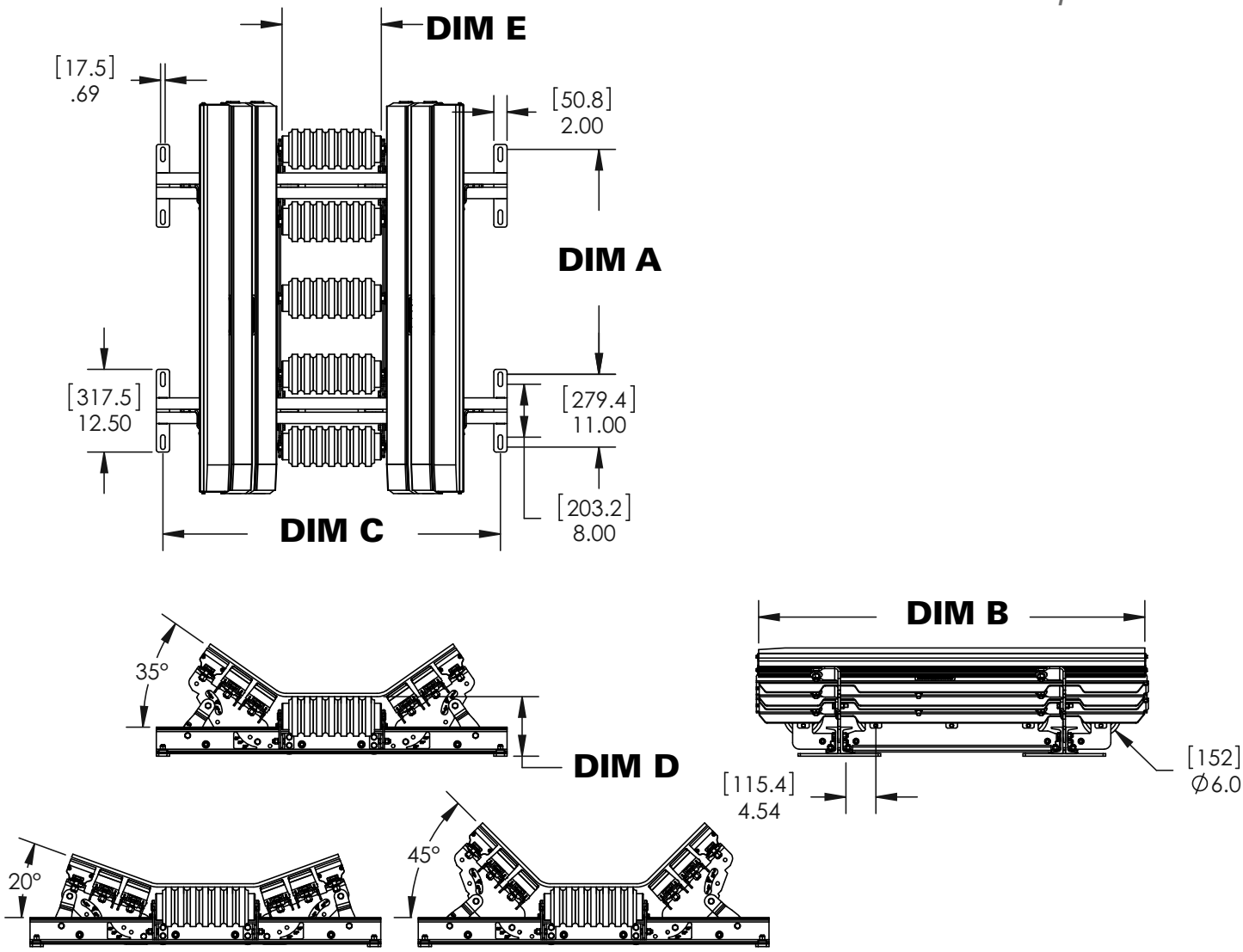

Bed Length 4′ (1.2 M)				Bed Length 5′ (1.5 M)*											
Dim A		Dim B		Dim A		Dim B		Bed Width		Dim C		Dim D		Dim E	
in.	mm	in.	mm	in.	mm	in.	mm	in.	mm	in.	mm	in.	mm	in.	mm
26	660.4	48.14	1222.8	34	863.6	58.38	1482.9	24	600	33	838	9	229	9	229
								30	750	39	991	9	229	11	279
								36	900	45	1143	9	229	13	330
								42	1050	51	1295	9	229	15	381
								48	1200	57	1448	9	229	17	432
								54	1350	63	1600	9.25	235	19	483
								60	1500	69	1753	9.25	235	21	533
								72	1800	81	2057	9.5	241	25	635

* 5' (1.5M) beds come with 5 impact rolls

Replacement Parts List

EZSB-I
Flexco Slider Beds
with Impact Rolls

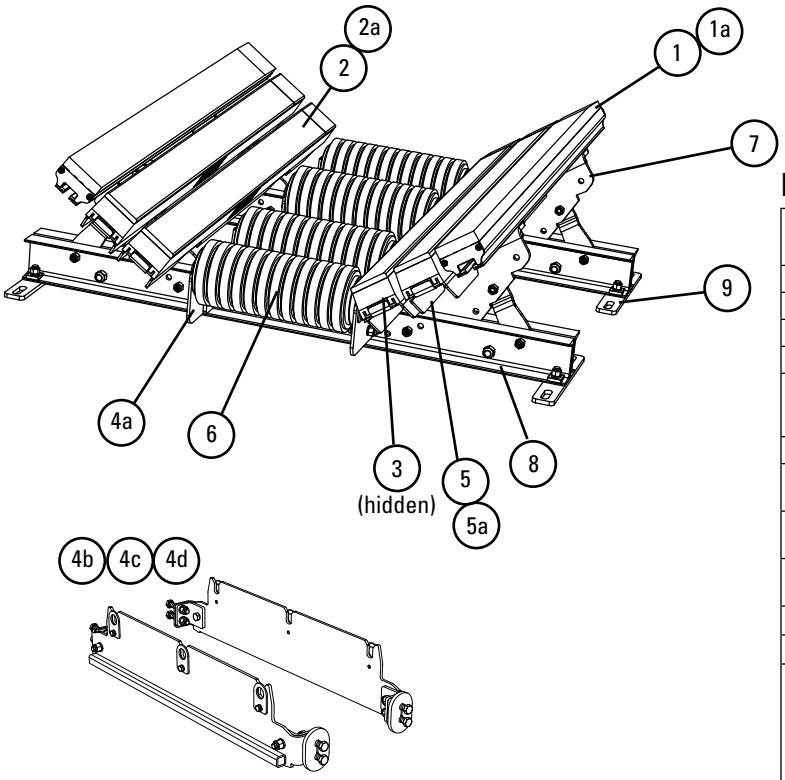

Replacement Parts

REF	DESCRIPTION	ORDERING NUMBER	ITEM CODE	WT. LBS.
1	Slider Bar, 4' (1.2M)	SB4	78789	20.0
1a	Slider Bar, 5' (1.5M)	SB5	78790	24.1
2	Impact Bar, 4' (1.2M)	IB4	76926	17.0
2a	Impact Bar, 5' (1.5M)	IB5	76927	21.0
3	Bar Bolt Kit (incl. 1 ea. 5/8" (15mm) carriage bolt, square washer, flat washer, lock washer, Nylock nut)	IBBK	76928	0.5
4a	Impact Roller Mount Kit*§	EZIRMK	79318	5.1
4b	Center Roller Mount Kit for 5' (1.5M) x 24-48" (600-1200mm)**	EZCRMK24-48	90434	43.5
4c	Center Roller Mount Kit for 5' (1.5M) x 54-60" (1350-1500mm)**	EZCRMK54-60	90261	43.5
4d	Center Roller Mount Kit for 5' (1.5M) x 72" (1800mm)**	EZCRMK72	90262	43.7
5	Impact Bar Support - L 4' (1.2M)*	EZBS-L4	78953	16.1
5a	Impact Bar Support - L 5' (1.5M)*	EZBS-L5	78954	20.4
6	Impact Roll 24" (600mm)	RRTID6-24	79883	20.0
	Impact Roll 30" (750mm)	RRTID6-30	79884	24.0
	Impact Roll 36" (900mm)	RRTID6-36	79885	27.8
	Impact Roll 42" (1050mm)	RRTID6-42	79886	32.0
	Impact Roll 48" (1200mm)	RRTID6-48	79887	35.8
	Impact Roll 54" (1350mm)	RRTID6-54	79888	39.6
	Impact Roll 60" (1500mm)	RRTID6-60	79889	43.4
	Impact Roll 72" (1800mm)	RRTID6-72	79890	51.2
7	Wing Plate Kit 24" (600mm)*	EZWPK-24	78970	16.9
	Wing Plate Kit 30" (750mm)*	EZWPK-30	78971	17.4
	Wing Plate Kit 36" (900mm)*	EZWPK-36	78972	21.2
	Wing Plate Kit 42" (1050mm)*	EZWPK-42	78973	26.2
	Wing Plate Kit 48" (1200mm)*	EZWPK-48	78974	30.1
	Wing Plate Kit 54" (1350mm)*	EZWPK-54	78975	35.6
	Wing Plate Kit 60" (1500mm)*	EZWPK-60	78976	39.0
	Wing Plate Kit 72" (1800mm)*	EZWPK-72	78977	46.7
8	Cross Stringer Kit 24" (600mm)*	EZCSK-24	78978	49.2
	Cross Stringer Kit 30" (750mm)*	EZCSK-30	78979	56.5
	Cross Stringer Kit 36" (900mm)*	EZCSK-36	78980	63.8
	Cross Stringer Kit 42" (1050mm)*	EZCSK-42	78981	70.8
	Cross Stringer Kit 48" (1200mm)*	EZCSK-48	78982	78.5
	Cross Stringer Kit 54" (1350mm)*	EZCSK-54	78983	85.8
	Cross Stringer Kit 60" (1500mm)*	EZCSK-60	78984	93.1
	Cross Stringer Kit 72" (1800mm)*	EZCSK-72	78985	99.1
9	Shim Kit Light Duty (incl. 4 shims)	SHIM-KITL	77548	13.6

Lead time: 1 working day
§ 4' beds require 2 ea item 4a;
5' beds require 1 ea item 4a and 1 ea item 4b, 4c or 4d as needed for bed length.
*Hardware Included
** 5' (1.5M) beds come with 5 impact rolls

Shim Requirements

IMPACT BED SIZE	CEMA C OR D, 5" (125mm) Idlers	CEMA C OR D, 6" (150mm) IDLERS
24"-36" (600-900mm)	Shim idler up .5" (12.5mm)	No Kits Required
42"-72" (1050-1800mm)	No Kits Required	Use (1) SHIM-KITL; Shim up .5" (12.5mm)

IMPACT BED SIZE	CEMA E, 6" (150mm) IDLERS	CEMA E, 7" (175mm) IDLERS
36"-60" (900-1500mm)	Use (3) SHIM-KITL; Shim up 1.5" (37.5mm)	Use (4) SHIM-KITL; Shim up 2" (50mm)
72" (1800mm)	Use (4) SHIM-KITL; Shim up 2" (50mm)	Use (5) SHIM-KITL; Shim up 2.5" (62.5mm)

Replacement Quantities for EZSB-I

in.		24	30	36	42	48	54	60	72
mm		600	750	900	1050	1200	1350	1500	1800
ROLLS REQUIRED	4' BEDS	4	4	4	4	4	4	4	4
	5' BEDS	5	5	5	5	5	5	5	5
BARS REQUIRED	SLIDER	2	2	2	2	2	2	2	2
	IMPACT	2	2	2	4	4	6	6	6
BAR BOLT KITS REQUIRED		10	10	10	16	16	22	22	22
BAR SUPPORTS REQUIRED		2	2	2	4	4	6	6	6

Product Ordering Information

Flexco Slider Bed Impact Bars - Light Duty

BELT WIDTH		TONNAGE RATING (ton/hr)	4' (1.2M) LENGTH			5' (1.5M) LENGTH		
in.	mm		ORDERING NUMBER	ITEM CODE	WT. LBS	ORDERING NUMBER	ITEM CODE	WT. LBS
24	600	3500	EZIB24-4L	78887	304.3	EZIB24-5L	78895	338.8
30	750	3500	EZIB30-4L	78888	320.9	EZIB30-5L	78896	355.5
36	900	4100	EZIB36-4L	78889	384.8	EZIB36-5L	78897	428.1
42	1050	5200	EZIB42-4L	78890	454.4	EZIB42-5L	78898	506.5
48	1200	5800	EZIB48-4L	78891	518.4	EZIB48-5L	78899	579.3
54	1350	7000	EZIB54-4L	78892	589.0	EZIB54-5L	78900	658.8
60	1500	7600	EZIB60-4L	78893	652.0	EZIB60-5L	78901	729.9
72	1800	8100	EZIB72-4L	78894	721.5	EZIB72-5L	78902	808.7

Lead time: 1 working day

Product Notes:

- CEMA D construction
- No need to specify troughing angle–designed to adjust to 20°, 35°, 45°.
- Outermost trough bar features 1" (25mm) solid UHMW slider bar to provide longer wear life and consistent load zone sealing where impact is not present.

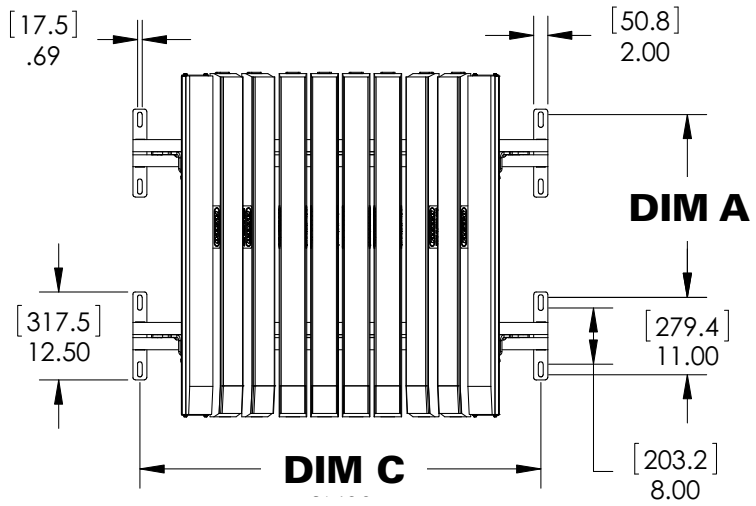

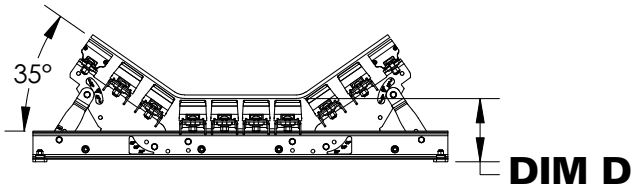

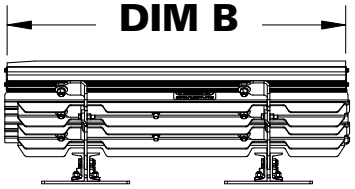

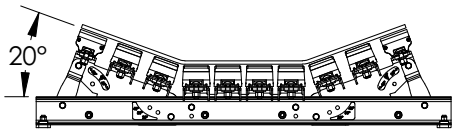

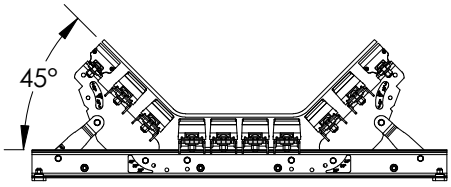

Bed Length 4′ (1.2 M)				Bed Length 5′ (1.5 M)				Bed Width		Dim C		Dim D	
Dim A		Dim B		Dim A		Dim B							
in.	mm	in.	mm	in.	mm	in.	mm	in.	mm	in.	mm	in.	mm
26	660.4	48.14	1222.8	34	863.6	58.38	1482.9	24	600	33	838	9	229
								30	750	39	991	9	229
								36	900	45	1143	9	229
								42	1050	51	1295	9	229
								48	1200	57	1448	9	229
								54	1350	63	1600	9.25	235
								60	1500	69	1753	9.25	235
								72	1800	81	2057	9.5	241

Replacement Parts List

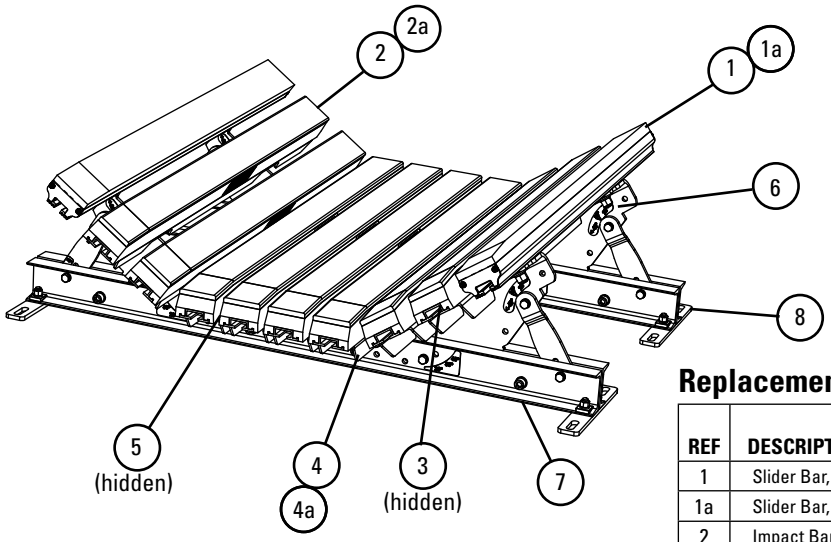

Replacement Parts

REF	DESCRIPTION	ORDERING NUMBER	ITEM CODE	WT. LBS.
1	Slider Bar, 4' (1.2M)	SB4	78789	20.0
1a	Slider Bar, 5' (1.5M)	SB5	78790	24.1
2	Impact Bar, 4' (1.2M)	IB4	76926	17.0
2a	Impact Bar, 5' (1.5M)	IB5	76927	21.0
3	Bar Bolt Kit (incl. 1 ea. 5/8" (15mm) carriage bolt, square washer, flat washer, lock washer, Nylock nut)	IBBK	76928	0.5
4	Impact Bar Support - L 4' (1.2M) *	EZBS-L4	78953	16.1
4a	Impact Bar Support - L 5' (1.5M) *	EZBS-L5	78954	20.4
5	Center Bar Mount Kit 24" (600mm) *	EZBMK-24	78944	5.2
	Center Bar Mount Kit 30" (750mm) *	EZBMK-30	78945	5.7
	Center Bar Mount Kit 36" (900mm) *	EZBMK-36	78946	7.5
	Center Bar Mount Kit 42" (1050mm) *	EZBMK-42	78947	8.0
	Center Bar Mount Kit 48" (1200mm) *	EZBMK-48	78948	9.8
	Center Bar Mount Kit 54" (1350mm) *	EZBMK-54	78949	10.5
	Center Bar Mount Kit 60" (1500mm) *	EZBMK-60	78950	12.3
	Center Bar Mount Kit 72" (1800mm) *	EZBMK-72	78951	14.6
6	Wing Plate Kit 24" (600mm) *	EZWPK-24	78970	16.9
	Wing Plate Kit 30" (750mm) *	EZWPK-30	78971	17.4
	Wing Plate Kit 36" (900mm) *	EZWPK-36	78972	21.2
	Wing Plate Kit 42" (1050mm) *	EZWPK-42	78973	26.2
	Wing Plate Kit 48" (1200mm) *	EZWPK-48	78974	30.1
	Wing Plate Kit 54" (1350mm) *	EZWPK-54	78975	35.6
	Wing Plate Kit 60" (1500mm) *	EZWPK-60	78976	39.0
	Wing Plate Kit 72" (1800mm) *	EZWPK-72	78977	46.7
7	Cross Stringer Kit 24" (600mm) *	EZCSK-24	78978	49.2
	Cross Stringer Kit 30" (750mm) *	EZCSK-30	78979	56.5
	Cross Stringer Kit 36" (900mm) *	EZCSK-36	78980	63.8
	Cross Stringer Kit 42" (1050mm) *	EZCSK-42	78981	70.8
	Cross Stringer Kit 48" (1200mm) *	EZCSK-48	78982	78.5
	Cross Stringer Kit 54" (1350mm) *	EZCSK-54	78983	85.8
	Cross Stringer Kit 60" (1500mm) *	EZCSK-60	78984	93.1
	Cross Stringer Kit 72" (1800mm) *	EZCSK-72	78985	99.1
8	Shim Kit Light Duty (incl. 4 shims)	SHIM-KITL	77548	13.6

*Hardware Included
Lead time: 1 working day

Shim Requirements

IMPACT BED SIZE	CEMA C OR D, 5" (125mm) Idlers	CEMA C OR D, 6" (150mm) IDLERS
24"-36" (600-900mm)	Shim idler up .5" (12.5mm)	No Kits Required
42"-72" (1050-1800mm)	No Kits Required	Use (1) SHIM-KITL; Shim up .5" (12.5mm)

IMPACT BED SIZE	CEMA E, 6" (150mm) IDLERS	CEMA E, 7" (175mm) IDLERS
36"-60" (900-1500mm)	Use (3) SHIM-KITL; Shim up 1.5" (37.5mm)	Use (4) SHIM-KITL; Shim up 2" (50mm)
72" (1800mm)	Use (4) SHIM-KITL; Shim up 2" (50mm)	Use (5) SHIM-KITL; Shim up 2.5" (62.5mm)

Replacement Quantities for EZIB-L

in.		24	30	36	42	48	54	60	72
mm		600	750	900	1050	1200	1350	1500	1800
BARS REQUIRED	SLIDER	2	2	2	2	2	2	2	2
	IMPACT	4	4	5	7	8	10	11	12
BAR BOLT KITS REQUIRED		16	16	19	25	28	34	37	40
BAR SUPPORTS REQUIRED		4	4	5	7	8	10	11	12

Product Ordering Information

EZIB-M
Flexco Impact Beds
All Bars – Medium Duty

Flexco Slider Bed Impact Bars - Medium Duty

BELT WIDTH		TONNAGE RATING (ton/hr)	4' (1.2M) LENGTH			5' (1.5M) LENGTH		
in.	mm		ORDERING NUMBER	ITEM CODE	WT. LBS	ORDERING NUMBER	ITEM CODE	WT. LBS
24	600	8,100	EZIB24-4M	78903	409.5	EZIB24-5M	78911	452.6
30	750	8,100	EZIB30-4M	78904	434.5	EZIB30-5M	78912	477.6
36	900	9,500	EZIB36-4M	78905	473.4	EZIB36-5M	78913	516.5
42	1050	12,200	EZIB42-4M	78906	595.0	EZIB42-5M	78914	655.7
48	1200	13,600	EZIB48-4M	78907	672.9	EZIB48-5M	78915	742.3
54	1350	16,300	EZIB54-4M	78908	757.9	EZIB54-5M	78916	836.3
60	1500	17,600	EZIB60-4M	78909	796.1	EZIB60-5M	78917	874.4
72	1800	19,000	EZIB72-4M	78910	844.2	EZIB72-5M	78918	1,016.3

Lead time: 1 working day

Product Notes:
- CEMA D construction
- No need to specify troughing angle–designed to adjust to 20°, 35°, 45°.
- Outermost trough bar features 1" (25mm) solid UHMW slider bar to provide longer wear life and consistent load zone sealing where impact is not present.

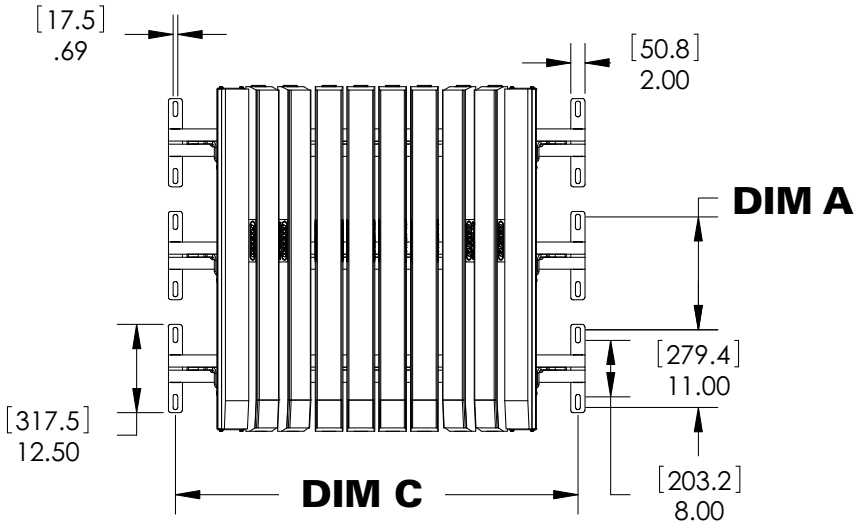

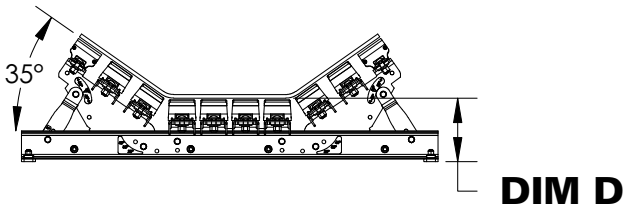

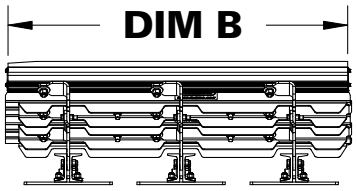

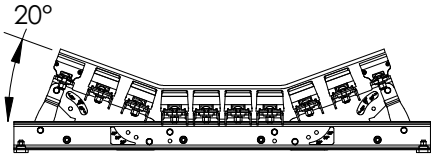

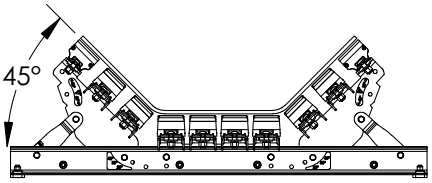

Bed Length 4′ (1.2 M)				Bed Length 5′ (1.5 M)				Bed Width		Dim C		Dim D	
Dim A		Dim B		Dim A		Dim B							
in.	mm	in.	mm	in.	mm	in.	mm	in.	mm	in.	mm	in.	mm
16	406.4	48.14	1222.8	22	558.8	58.38	1482.9	24	600	33	838	9	229
								30	750	39	991	9	229
								36	900	45	1143	9	229
								42	1050	51	1295	9	229
								48	1200	57	1448	9	229
								54	1350	63	1600	9.25	235
								60	1500	69	1753	9.25	235
								72	1800	81	2057	9.5	241

Replacement Parts List

EZIB-M
Flexco Impact Beds
All Bars – Medium Duty

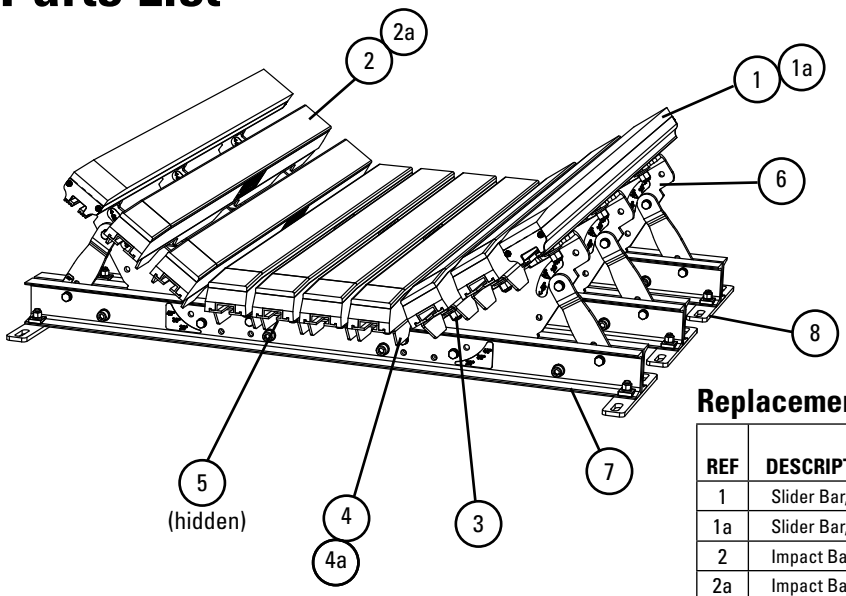

Replacement Parts

REF	DESCRIPTION	ORDERING NUMBER	ITEM CODE	WT. LBS.
1	Slider Bar, 4' (1.2M)	SB4	78789	20
1a	Slider Bar, 5' (1.5M)	SB5	78790	24.1
2	Impact Bar, 4' (1.2M)	IB4	76926	17
2a	Impact Bar, 5' (1.5M)	IB5	76927	21
3	Bar Bolt Kit (incl. 1 ea. 5/8" (15mm) carriage bolt, square washer, flat washer, lock washer, Nylock nut)	IBBK	76928	0.5
4	Impact Bar Support - M 4' (1.2M) *	IBS-M4	76931	16.9
4a	Impact Bar Support - M 5' (1.5M) *	IBS-M5	76932	21.2
5	Center Bar Mount Kit 24" (600mm) *	EZBMK-24	78944	5.2
	Center Bar Mount Kit 30" (750mm) *	EZBMK-30	78945	5.7
	Center Bar Mount Kit 36" (900mm) *	EZBMK-36	78946	7.5
	Center Bar Mount Kit 42" (1050mm) *	EZBMK-42	78947	8.0
	Center Bar Mount Kit 48" (1200mm) *	EZBMK-48	78948	9.8
	Center Bar Mount Kit 54" (1350mm) *	EZBMK-54	78949	10.5
	Center Bar Mount Kit 60" (1500mm) *	EZBMK-60	78950	12.3
	Center Bar Mount Kit 72" (1800mm) *	EZBMK-72	78951	14.6
6	Wing Plate Kit 24" (600mm) *	EZWPK-24	78970	16.9
	Wing Plate Kit 30" (750mm) *	EZWPK-30	78971	17.4
	Wing Plate Kit 36" (900mm) *	EZWPK-36	78972	21.2
	Wing Plate Kit 42" (1050mm) *	EZWPK-42	78973	26.2
	Wing Plate Kit 48" (1200mm) *	EZWPK-48	78974	30.1
	Wing Plate Kit 54" (1350mm) *	EZWPK-54	78975	35.6
	Wing Plate Kit 60" (1500mm) *	EZWPK-60	78976	39.0
	Wing Plate Kit 72" (1800mm) *	EZWPK-72	78977	46.7
7	Cross Stringer Kit 24" (600mm) *	EZCSK-24	78978	49.2
	Cross Stringer Kit 30" (750mm) *	EZCSK-30	78979	56.5
	Cross Stringer Kit 36" (900mm) *	EZCSK-36	78980	63.8
	Cross Stringer Kit 42" (1050mm) *	EZCSK-42	78981	70.8
	Cross Stringer Kit 48" (1200mm) *	EZCSK-48	78982	78.5
	Cross Stringer Kit 54" (1350mm) *	EZCSK-54	78983	85.8
	Cross Stringer Kit 60" (1500mm) *	EZCSK-60	78984	93.1
	Cross Stringer Kit 72" (1800mm) *	EZCSK-72	78985	99.1
8	Shim Kit Medium Duty (incl. 4 shims)	SHIM-KITM	77549	20.4

*Hardware Included

Shim Requirements

IMPACT BED SIZE	CEMA C OR D, 5" (125mm) Idlers	CEMA C OR D, 6" (150mm) IDLERS
24"-36" (600-900mm)	Shim idler up .5" (12.5mm)	No Kits Required
42"-72" (1050-1800mm)	No Kits Required	Use (1) SHIM-KITM; Shim up .5" (12.5mm)

IMPACT BED SIZE	CEMA E, 6" (150mm) IDLERS	CEMA E, 7" (175mm) IDLERS
36"-60" (900-1500mm)	Use (3) SHIM-KITM; Shim up 1.5" (37.5mm)	Use (4) SHIM-KITM; Shim up 2" (50mm)
72" (1800mm)	Use (4) SHIM-KITM; Shim up 2" (50mm)	Use (5) SHIM-KITM; Shim up 2.5" (62.5mm)

Replacement Quantities for EZIB-M

in.		24	30	36	42	48	54	60	72
mm		600	750	900	1050	1200	1350	1500	1800
BARS REQUIRED	SLIDER	2	2	2	2	2	2	2	2
	IMPACT	4	4	5	7	8	10	11	12
BAR BOLT KITS REQUIRED		26	26	31	41	46	56	61	66
BAR SUPPORTS REQUIRED		4	4	5	7	8	10	11	12

Product Ordering Information

Modular Slider Bed with Impact Rolls

(for impact zones with less than 200 lb-ft energy)

BELT WIDTH		TONNAGE RATING (ton/hr)	2' (600mm) SECTIONS		
in.	mm		ORDERING NUMBER	ITEM CODE	WT. LBS
24	600	3500	MSB24-2I	79979	246.8
30	750	3500	MSB30-2I	79980	263.5
36	900	4100	MSB36-2I	79981	297.9
42	1050	4500	MSB42-2I	79982	373.2
48	1200	4500	MSB48-2I	79983	393.4
54	1350	4500	MSB54-2I	79984	493.2
60	1500	4500	MSB60-2I	79985	513.9
72	1800	4500	MSB72-2I	79986	557.9

Lead time: 1 working day

Add-on Impact Roller Kit

(for placement between 2 beds to reduce the space between impact rollers)

BELT WIDTH		ORDERING NUMBER	ITEM CODE	WT. LBS
in.	mm			
24	600	MSB24RMK	79991	17.0
30	750	MSB30RMK	79992	18.5
36	900	MSB36RMK	79993	20.2
42	1050	MSB42RMK	79994	21.8
48	1200	MSB48RMK	79995	24.0
54	1350	MSB54RMK	79996	24.9
60	1500	MSB60RMK	79997	26.0
72	1800	MSB72RMK	79998	29.5

Lead time: 1 working day

Add-on Impact Roller installed between 2 Modular Slider Beds

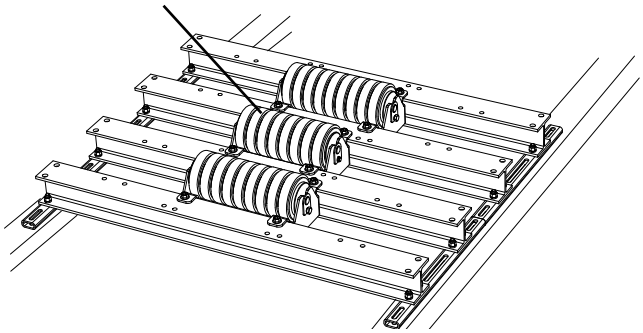

Adjustable Idler Set with Impact Rolls

(for placement between multiple beds or in transitions; Adjusts from 10 - 45° in 5° increments)

BELT WIDTH		ORDERING NUMBER	ITEM CODE	WT. LBS
in.	mm			
24	600	EZAI-24I	79091	89.9
30	750	EZAI-30I	79092	100.0
36	900	EZAI-36I	79093	110.7
42	1050	EZAI-42I	79094	120.0
48	1200	EZAI-48I	79095	133.3
54	1350	EZAI-54I	79096	142.5
60	1500	EZAI-60I	79097	151.3
72	1800	EZAI-72I	79098	173.6

Lead time: 1 working day
SHIM-KIT-EZAI 91857 $75 - includes two 1/4" and two 1/2" shims

Product Notes:

- Modular design accomodates any length of load zone
- CEMA D construction
- No need to specify troughing angle – designed to adjust to 20°, 35°, 45°
- All bars feature 1" (25mm) solid UHMW
- With removal of a few bolts, the wings and center sections slide out for service
- Optional add-on roller to join two beds and reduce the space between idlers from every 24" (600mm) to every 12" (300mm).

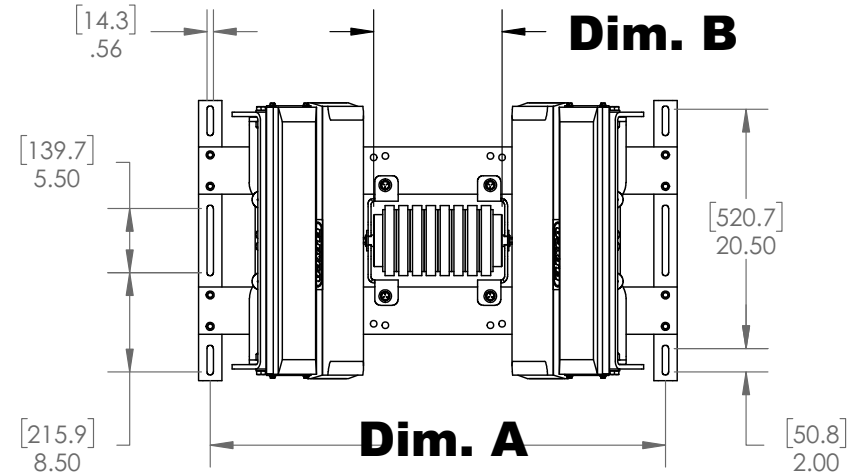

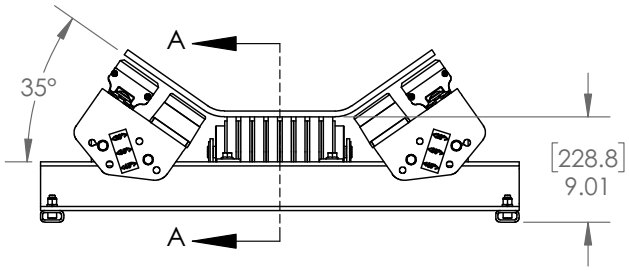

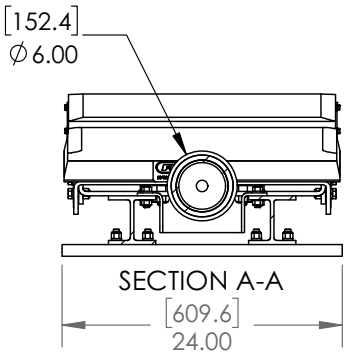

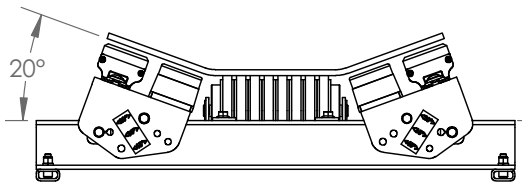

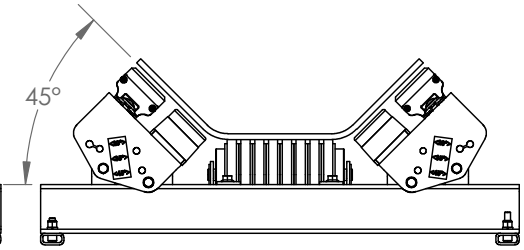

Bed Width	Dim A	Dim B
24" (600mm)	33" (838.2mm)	9" (228.6mm)
30" (750mm)	39" (990.6mm)	11" (279.4mm)
36" (900mm)	45" (1143mm)	13" (330.2mm)
42" (1050mm)	51" (1295.4mm)	15" (381mm)
48" (1200mm)	57" (1447.8mm)	17" (431.8mm)
54" (1350mm)	63" (1600.2mm)	19" (482.6mm)
60" (1500mm)	69" (1752.6mm)	21" (533.4mm)
72″ (1800mm)	81" (2057.4mm)	25" (635mm)

Replacement Parts List

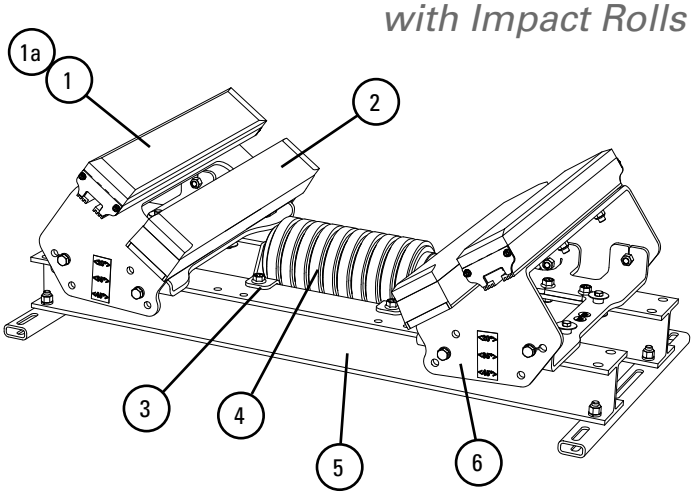

Replacement Parts

REF	DESCRIPTION	ORDERING NUMBER	ITEM CODE	WT. LBS.
1	Slider Bar, 2' (600mm)	SB2	79970	10.0
1a	Slider Bar with Hardware, 2' (600mm)	SB2F	79988	10.9
2	Impact Bar, 2' (600mm)	MIB2-1U	79379	19.7
2a	Impact Bar with Hardware, 2' (600mm)	MIB2-1UF	79908	20.0
3	Roller Mount Kit *	MSBRMK	79987	7.9
4	Impact Roll 24" (600mm)	RRTID6-24	79883	20.0
	Impact Roll 30" (750mm)	RRTID6-30	79884	24.0
	Impact Roll 36" (900mm)	RRTID6-36	79885	27.8
	Impact Roll 42" (1050mm)	RRTID6-42	79886	32.0
	Impact Roll 48" (1200mm)	RRTID6-48	79887	35.8
	Impact Roll 54" (1350mm)	RRTID6-54	79888	39.6
	Impact Roll 60" (1500mm)	RRTID6-60	79889	43.4
	Impact Roll 72" (1800mm)	RRTID6-72	79890	51.2
5	Cross Stringer Kit 24" (600mm) *	MIB24CSK	90237	86.7
	Cross Stringer Kit 30" (750mm) *	MIB30CSK	90238	99.6
	Cross Stringer Kit 36" (900mm) *	MIB36CSK	90239	112.5
	Cross Stringer Kit 42" (1050mm) *	MIB42CSK	90240	125.4
	Cross Stringer Kit 48" (1200mm) *	MIB48CSK	90241	138.4
	Cross Stringer Kit 54" (1350mm) *	MIB54CSK	90242	153.7
	Cross Stringer Kit 60" (1500mm) *	MIB60CSK	90243	166.6
	Cross Stringer Kit 72" (1800mm) *	MIB72CSK	90244	194.7
6	Wing Plate Kit 24" (600mm) *	MIB24WPK	90245	38.9
	Wing Plate Kit 30" (750mm) *	MIB30WPK	90246	39.8
	Wing Plate Kit 36" (900mm) *	MIB36WPK	90247	49.6
	Wing Plate Kit 42" (1050mm) *	MIB42WPK	90248	59.7
	Wing Plate Kit 48" (1200mm) *	MIB48WPK	90249	62.4
	Wing Plate Kit 54" (1350mm) *	MIB54WPK	90250	83.8
	Wing Plate Kit 60" (1500mm) *	MIB60WPK	90251	86.7
	Wing Plate Kit 72" (1800mm) *	MIB72WPK	90252	92.8
-	Shim Kit (incl. 4 shims)	SHIM-KITMOD	79989	11.8

*Hardware Included

Shim Requirements

IMPACT BED SIZE	CEMA C OR D, 5" (125mm) Idlers	CEMA C OR D, 6" (150mm) IDLERS
24"-36" (600-900mm)	Use (1) shim kit; Shim idler up .5" (13mm)	No shim
42"-72" (1050-1800mm)	No shim	Use (1) shim kit; Shim bed up .5" (13mm)
IMPACT BED SIZE	**CEMA E, 6" (150mm) Idlers**	**CEMA E, 7" (175mm) IDLERS**
36"-60" (900-1500mm)	Use (3) shim kits; Shim bed up 1.5" (38mm)	Use (4) shim kits; Shim bed up 2" (50mm)
72" (1800mm)	Use (4) shim kits; Shim bed up 2" (50mm)	Use (5) shim kits; Shim bed up 2.5" (64mm)

Replacement Quantities for MSB

in.		24	30	36	42	48	54	60	72
mm		600	750	900	1050	1200	1350	1500	1800
BARS REQUIRED	SLIDER	2	2	2	2	2	2	2	2
	IMPACT	2	2	2	4	4	6	6	6

Modular Impact Bed

(for impact zones with less than 1500 lb-ft energy)

BELT WIDTH		TONNAGE RATING (ton/hr)	2' (600mm) LENGTH		
in.	mm		ORDERING NUMBER	ITEM CODE	WT. LBS
24	600	12800	MIB24-2H	79971	288.0
30	750	12800	MIB30-2H	79972	303.9
36	900	14900	MIB36-2H	79973	365.1
42	1050	19200	MIB42-2H	79974	439.0
48	1200	21300	MIB48-2H	79975	484.4
54	1350	25600	MIB54-2H	79976	583.8
60	1500	27700	MIB60-2H	79977	629.5
72	1800	29900	MIB72-2H	79978	698.3

Lead time: 1 working day

Adjustable Idler Set with Impact Rolls

(for placement between multiple beds or in transitions; Adjusts from 10 - 45° in 5° increments)

BELT WIDTH		ORDERING NUMBER	ITEM CODE	WT. LBS
in.	mm			
24	600	EZAI-24I	79091	89.9
30	750	EZAI-30I	79092	100.0
36	900	EZAI-36I	79093	110.7
42	1050	EZAI-42I	79094	120.0
48	1200	EZAI-48I	79095	133.3
54	1350	EZAI-54I	79096	142.5
60	1500	EZAI-60I	79097	151.3
72	1800	EZAI-72I	79098	173.6

Lead time: 1 working day
SHIM-KIT-EZAI 91857 - includes two 1/4" and two 1/2" shims

Product Notes:

- Modular design accomodates any length of load zone
- CEMA D construction
- No need to specify troughing angle–designed to adjust to 20°, 35°, 45°
- All bars feature 1" (25mm) solid UHMW
- With removal of a few bolts, the wings and center sections slide out for service

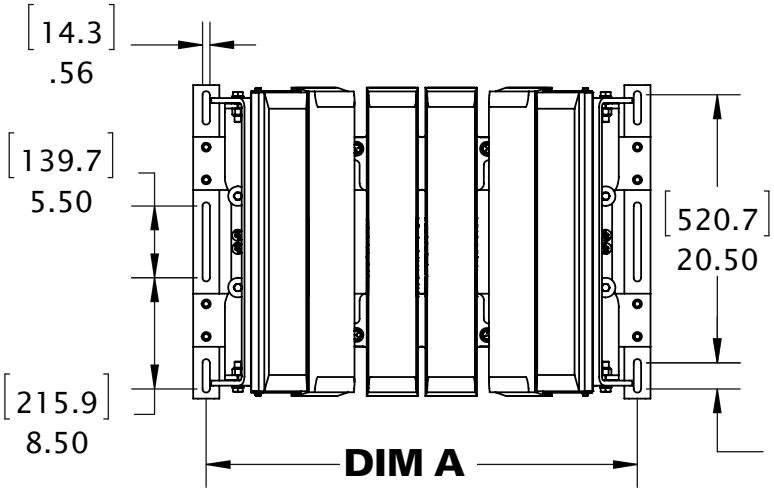

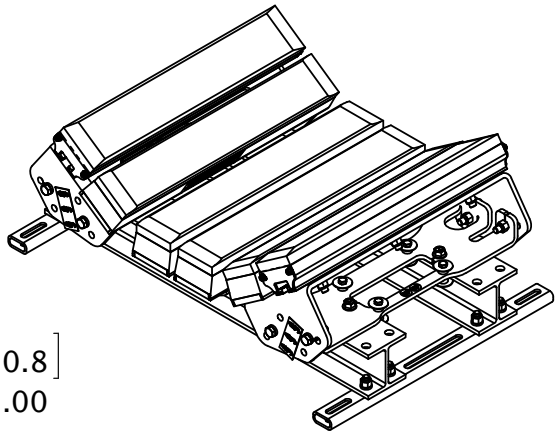

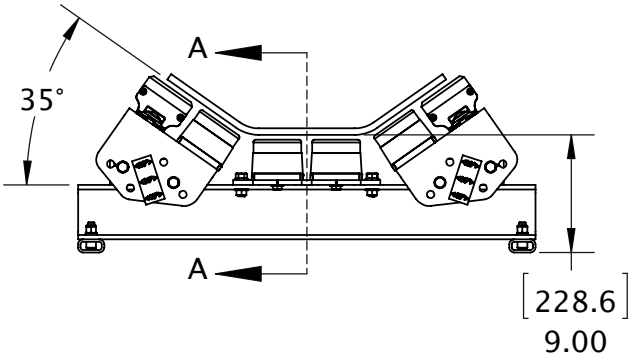

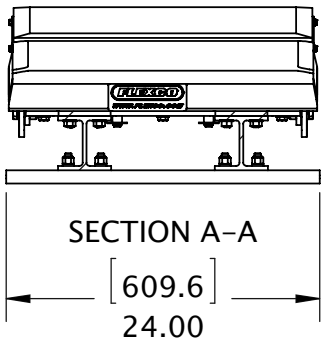

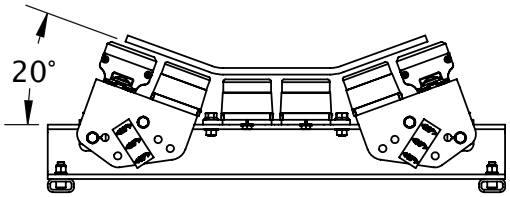

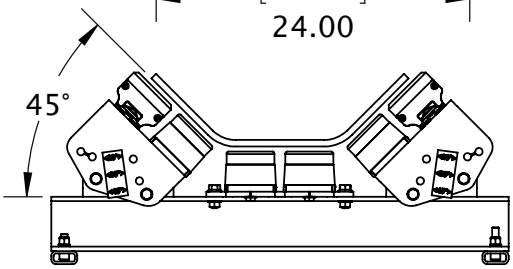

Bed Width	Dim A
24" (600mm)	33" (838.2mm)
30" (750mm)	39" (990.6mm)
36" (900mm)	45" (1143mm)
42" (1050mm)	51" (1295.4mm)
48" (1200mm)	57" (1447.8mm)
54" (1350mm)	63" (1600.2mm)
60" (1500mm)	69" (1752.6mm)
72″ (1800mm)	81" (2057.4mm)

Replacement Parts List

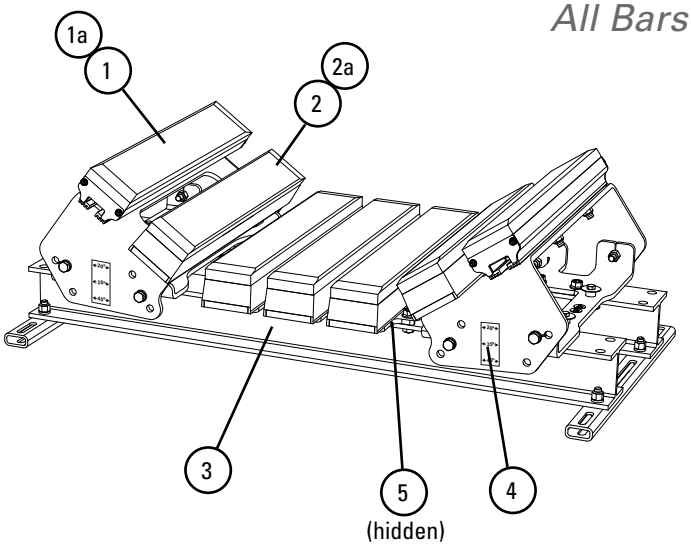

Replacement Parts

REF	DESCRIPTION	ORDERING NUMBER	ITEM CODE	WT. LBS.
1	Slider Bar, 2' (600mm)	SB2	79970	10.0
1a	Slider Bar with Hardware, 2' (600mm)	SB2F	79988	10.9
2	Impact Bar, 2' (600mm)	MIB2-1U	79379	19.7
2a	Impact Bar with Hardware, 2' (600mm)	MIB2-1UF	79908	20.0
3	Cross Stringer Kit 24" (600mm) *	MIB24CSK	90237	86.7
	Cross Stringer Kit 30" (750mm) *	MIB30CSK	90238	99.6
	Cross Stringer Kit 36" (900mm) *	MIB36CSK	90239	112.5
	Cross Stringer Kit 42" (1050mm) *	MIB42CSK	90240	125.4
	Cross Stringer Kit 48" (1200mm) *	MIB48CSK	90241	138.4
	Cross Stringer Kit 54" (1350mm) *	MIB54CSK	90242	153.7
	Cross Stringer Kit 60" (1500mm) *	MIB60CSK	90243	166.6
	Cross Stringer Kit 72" (1800mm) *	MIB72CSK	90244	194.7
4	Wing Plate Kit 24" (600mm) *	MIB24WPK	90245	38.9
	Wing Plate Kit 30" (750mm) *	MIB30WPK	90246	39.8
	Wing Plate Kit 36" (900mm) *	MIB36WPK	90247	49.6
	Wing Plate Kit 42" (1050mm) *	MIB42WPK	90248	59.7
	Wing Plate Kit 48" (1200mm) *	MIB48WPK	90249	62.4
	Wing Plate Kit 54" (1350mm) *	MIB54WPK	90250	83.8
	Wing Plate Kit 60" (1500mm) *	MIB60WPK	90251	86.7
	Wing Plate Kit 72" (1800mm) *	MIB72WPK	90252	92.8
5	Center Plate Kit 24" (600mm) *	MIB24CPK	90253	19.3
	Center Plate Kit 30" (750mm) *	MIB30CPK	90254	20.4
	Center Plate Kit 36" (900mm) *	MIB36CPK	90255	29.2
	Center Plate Kit 42" (1050mm) *	MIB42CPK	90256	29.9
	Center Plate Kit 48" (1200mm) *	MIB48CPK	90257	37.0
	Center Plate Kit 54" (1350mm) *	MIB54CPK	90258	38.5
	Center Plate Kit 60" (1500mm) *	MIB60CPK	90259	45.4
	Center Plate Kit 72" (1800mm) *	MIB72CPK	90260	54.2
-	Shim Kit (incl. 4 shims)	SHIM-KITMOD	79989	11.8

*Hardware Included

Shim Requirements

IMPACT BED SIZE	CEMA C OR D, 5" (125mm) Idlers	CEMA C OR D, 6" (150mm) IDLERS
24"-36" (600-900mm)	Use (1) shim kit; Shim idler up .5" (13mm)	No shim
42"-72" (1050-1800mm)	No shim	Use (1) shim kit; Shim bed up .5" (13mm)
IMPACT BED SIZE	**CEMA E, 6" (150mm) Idlers**	**CEMA E, 7" (175mm) IDLERS**
36"-60" (900-1500mm)	Use (3) shim kits; Shim bed up 1.5" (38mm)	Use (4) shim kits; Shim bed up 2" (50mm)
72" (1800mm)	Use (4) shim kits; Shim bed up 2" (50mm)	Use (5) shim kits; Shim bed up 2.5" (64mm)

Replacement Quantities for MIB

in.		24	30	36	42	48	54	60	72
mm		600	750	900	1050	1200	1350	1500	1800
BARS REQUIRED	SLIDER	2	2	2	2	2	2	2	2
	IMPACT	4	4	5	7	8	10	11	12

Specifications & Guidelines

It's the Structure, not the bars

It absorbs more impact to save your belt. Our exclusive Velocity Reduction Technology™ provides two levels of impact relief.

Level 1: Impact Bars first absorb impact energy. Unique Impact Bar Supports on all DRX Impact Beds allow the impact bars to function properly - expanding and absorbing more impact energy.

Level 2: On DRX200, 750 and 1500 impact beds, Isolation Mounts provide a second level of reaction force reduction, absorbing additional impact energy and minimizing transmission back to the belt. The DRX3000 Dynamic has Impact Energy Absorbers to disperse an immense amount of impact, even in extremely severe applications.

User-Friendly Slide-Out Service™

- All DRX Impact Beds separate in the middle to slide apart and out.
- Can be easily and safely converted from the run position to the service position.
- Impact bars are easy to get to for changeout. A complete changeout can be done in one or two hours.

Unique Impact Bar Supports protect the impact bars from damage, extending service life. An Anti-Migratory Tab on each support secures the bar and prevents it from sliding in the direction of the belt.

Other Features and Benefits

- Uses exclusive anti-spin square washers. Allows use of carriage bolts to secure impact bars instead of expensive T bolts.

How to spec the correct impact bed for your conveyor transfer point

Roller Size and CEMA Rating

5" (125mm) ☐ 6" (150mm) ☐

CEMA C ☐ D ☐ E ☐

Belt Width _____

Troughing Angle: 20° ☐ 35° ☐

Bed Length: 4' (1.2M) ☐ 5' (1.5M) ☐

Impact Energy Calculation Chart

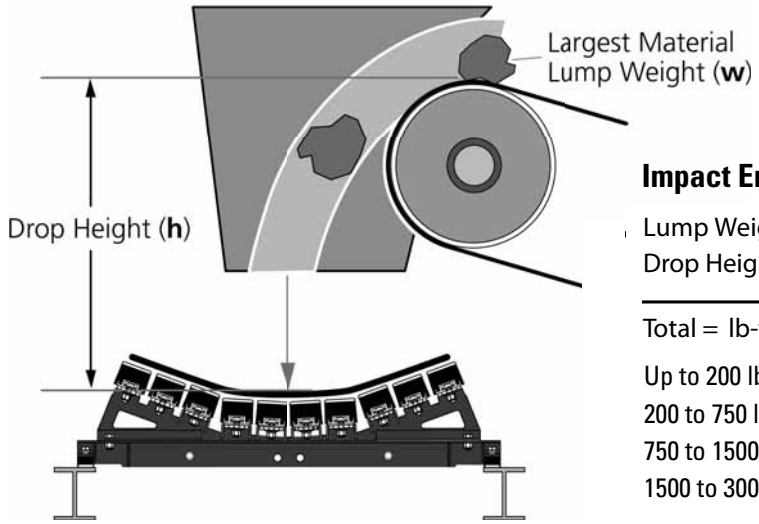

Impact Energy

Lump Weight (w) _____

Drop Height (h) x _____

Total = lb-ft _____ See Below

Up to 200 lb-ft (25 kg-m)—DRX200
200 to 750 lb-ft (25 to 100 kg-m)—DRX750
750 to 1500 lb-ft (100 to 200 kg-m)—DRX1500
1500 to 3000 lb-ft (200 to 400 kg-m)—DRX3000

DRX™ Impact Beds

Product Ordering Information

DRX200 CEMA D construction

BELT WIDTH		TONNAGE RATING (ton/hr)	4' (1.2 M) BEDS, 20° TROUGH			4' (1.2 M) BEDS, 35° TROUGH		
in.	mm		ORDERING NUMBER	ITEM CODE	WT. LBS	ORDERING NUMBER	ITEM CODE	WT. LBS.
24	600	3500	DRXL-24-420	76816	260.0	DRXL-24-435	76832	260.0
30	750	3500	DRXL-30-420	76817	282.0	DRXL-30-435	76833	282.0
36	900	4100	DRXL-36-420	76818	323.0	DRXL-36-435	76834	323.0
42	1050	5200	DRXL-42-420	76819	412.0	DRXL-42-435	76835	412.0
48	1200	5800	DRXL-48-420	76820	433.0	DRXL-48-435	76836	433.0
54	1350	7000	DRXL-54-420	76821	498.0	DRXL-54-435	76837	498.0
60	1500	7600	DRXL-60-420	76822	543.0	DRXL-60-435	76838	543.0
72	1800	8100	DRXL-72-420	76823	615.0	DRXL-72-435	76839	615.0

Lead time: 2 weeks

Product Notes:

- Rated for impacts up to 200 lb-ft (25 kg-m)
- Rated for belt speeds up to 1000 fpm (5m/s)
- Slide-out serviceability
- Velocity Reduction Technology provides multiple points of protection
- Alternative trough angles or picking idler profiles available by special quote

BELT WIDTH		TONNAGE RATING (ton/hr)	5' (1.5 M) BEDS, 20° TROUGH			5' (1.5 M) BEDS, 35° TROUGH		
in.	mm		ORDERING NUMBER	ITEM CODE	WT. LBS	ORDERING NUMBER	ITEM CODE	WT. LBS.
24	600	3500	DRXL-24-520	76824	290.0	DRXL-24-535	76840	290.0
30	750	3500	DRXL-30-520	76825	311.0	DRXL-30-535	76841	311.0
36	900	4100	DRXL-36-520	76826	357.0	DRXL-36-535	76842	357.0
42	1050	5200	DRXL-42-520	76827	459.0	DRXL-42-535	76843	459.0
48	1200	5800	DRXL-48-520	76828	480.0	DRXL-48-535	76844	480.0
54	1350	7000	DRXL-54-520	76829	554.0	DRXL-54-535	76845	554.0
60	1500	7600	DRXL-60-520	76830	602.0	DRXL-60-535	76846	602.0
72	1800	8100	DRXL-72-520	76831	679.0	DRXL-72-535	76847	679.0

Lead time: 2 weeks

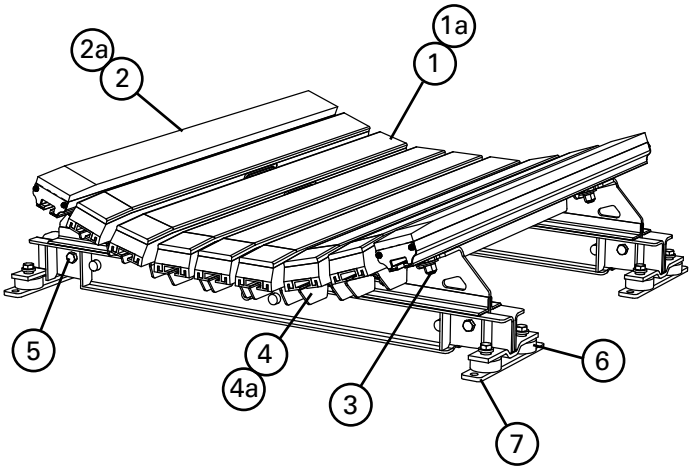

* Belt width + 9" = Structure width

Impact Bed Size	Cema C or D, 5" IDLERS	CEMA C or D, 6" IDLERS
DRX200: 24"- 36"	Shim idler up 1/2"	No Kits Required
DRX200: 42"- 72"	No Kits Required	Use (1) SHIM-KITL; Shim up 0.5"

Impact Bed Size	CEMA E, 6" IDLERS	CEMA E, 7" IDLERS
DRX200: 36"-60"	Use (3) SHIM-KITL; Shim up 1.5"	Use (4) SHIM-KITL; Shim up 2"
DRX200: 72"	Use (4) SHIM-KITL; Shim up 2"	Use (5) SHIM-KITL; Shim up 2.5"

Replacement Parts

REF	DESCRIPTION	ORDERING NUMBER	ITEM CODE	WT. LBS.
1	Impact Bar, 4'	IB4	76926	17.0
1a	Impact Bar, 5'	IB5	76927	21.2
2	Slider Bar, 4' (1.2M)	SB4	78789	20.0
2a	Slider Bar, 5' (1.5M)	SB5	78790	24.1
3	Impact Bar Bolt Kit incl. (1) ea 5/8" carriage bolt, square washer, flat washer, lock washer, Nylock nut	IBBK	76928	0.5
4	Impact Bar Support – L 4' incl. (1) ea bar support, carriage bolt, square washer, lock washer, Nylock nut	IBS-L4	76929	16.8
4a	Impact Bar Support – L 5' incl. (1) ea bar support, carriage bolt, square washer, lock washer, Nylock nut	IBS-L5	76930	21.0
5	Sliding Support Arm Bolt Kit incl. (2) 2" bolts, (2) lock washers, (2) Nylock nuts	ISABK-LMH	77529	2.0
6	Isolation Mount Kit	IMK	76936	3.8
7	DRX200 Shim Kit (incl. 4 shims)	SHIM-KITL	77548	13.6

Lead time: 1 working day

Replacement Bars, Bar Supports and Bolt Kits Required per Belt Width - DRX200

in.	24	30	36	42	48	54	60	72
mm	600	750	900	1050	1200	1350	1500	1800
Slider Bars Required	2	2	2	2	2	2	2	4
Impact Bars Required	4	4	5	7	8	10	11	12
Impact Bar Supports Required	4	4	5	7	8	10	11	12
Impact Bar Bolt Kits Required	16	16	19	25	28	34	37	44

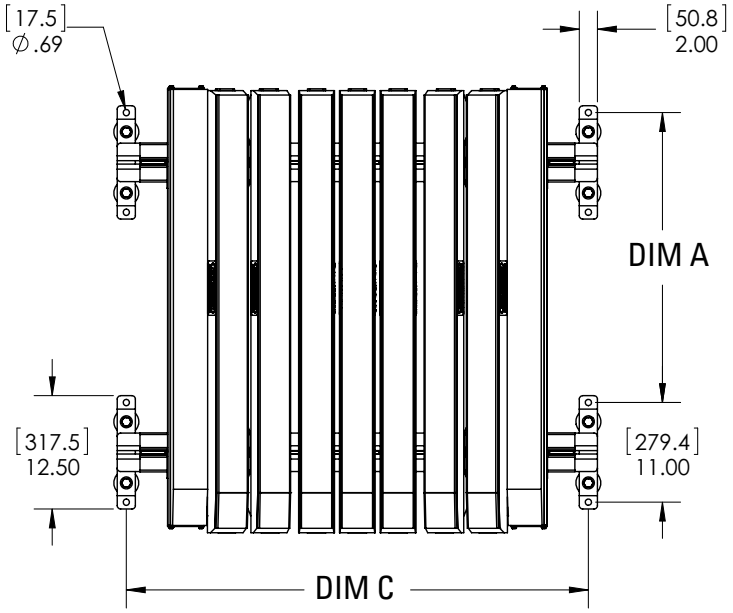

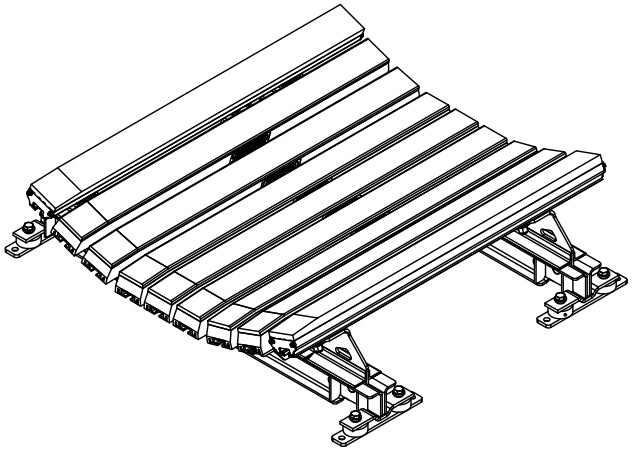

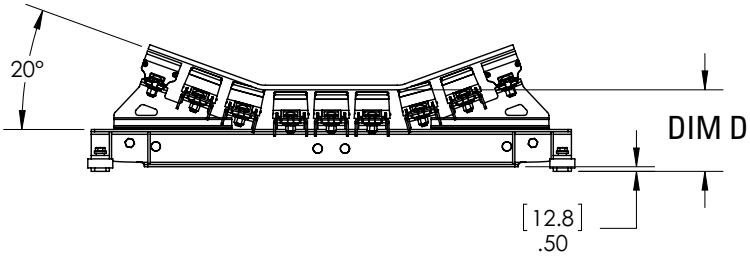

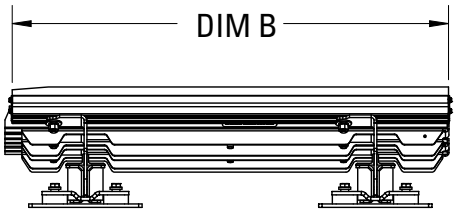

Bed Length 4′ (1.2 M)				Bed Length 5′ (1.5 M)				Bed Width		Dim C		Dim D	
Dim A		Dim B		Dim A		Dim B							
in.	mm	in.	mm	in.	mm	in.	mm	in.	mm	in.	mm	in.	mm
32	812.8	48.14	1222.8	44	1117.6	58.38	1482.9	24	600	33	838	9	229
								30	750	39	991	9	229
								36	900	45	1143	9	229
								42	1050	51	1295	9	229
								48	1200	57	1448	9	229
								54	1350	63	1600	9.25	235
								60	1500	69	1753	9.25	235
								72	1800	81	2057	9.5	241

Product Ordering Information

DRX750 CEMA D construction

BELT WIDTH		TONNAGE RATING (ton/hr)	4' (1.2 M) BEDS, 20° TROUGH			4' (1.2 M) BEDS, 35° TROUGH		
in.	mm		ORDERING NUMBER	ITEM CODE	WT. LBS	ORDERING NUMBER	ITEM CODE	WT. LBS.
24	600	8,100	DRXM-24-420	76848	365.0	DRXM-24-435	76864	365.0
30	750	8,100	DRXM-30-420	76849	397.0	DRXM-30-435	76865	397.0
36	900	9,500	DRXM-36-420	76850	467.0	DRXM-36-435	76866	467.0
42	1050	12,200	DRXM-42-420	76851	592.0	DRXM-42-435	76867	592.0
48	1200	13,600	DRXM-48-420	76852	623.0	DRXM-48-435	76868	623.0
54	1350	16,300	DRXM-54-420	76853	704.0	DRXM-54-435	76869	704.0
60	1500	17,600	DRXM-60-420	76854	779.0	DRXM-60-435	76870	779.0
72	1800	19,000	DRXM-72-420	76855	896.0	DRXM-72-435	76871	896.0

Lead time: 2 weeks

BELT WIDTH		TONNAGE RATING (ton/hr)	5' (1.5 M) BEDS, 20° TROUGH			5' (1.5 M) BEDS, 35° TROUGH		
in.	mm		ORDERING NUMBER	ITEM CODE	WT. LBS	ORDERING NUMBER	ITEM CODE	WT. LBS.
24	600	8,100	DRXM-24-520	76856	403.0	DRXM-24-535	76872	403.0
30	750	8,100	DRXM-30-520	76857	435.0	DRXM-30-535	76873	435.0
36	900	9,500	DRXM-36-520	76858	514.0	DRXM-36-535	76874	514.0
42	1050	12,200	DRXM-42-520	76859	656.0	DRXM-42-535	76875	656.0
48	1200	13,600	DRXM-48-520	76860	687.0	DRXM-48-535	76876	687.0
54	1350	16,300	DRXM-54-520	76861	777.0	DRXM-54-535	76877	777.0
60	1500	17,600	DRXM-60-520	76862	861.0	DRXM-60-535	76878	861.0
72	1800	19,000	DRXM-72-520	76863	985.0	DRXM-72-535	76879	985.0

Lead time: 2 weeks

Product Notes:

- Rated for impacts up to 750 lb-ft (100 kg-m)
- Rated for belt speeds up to 1000 fpm (5m/s)
- Slide-out serviceability
- Velocity Reduction Technology provides multiple points of protection
- Alternative trough angles or picking idler profiles available by special quote

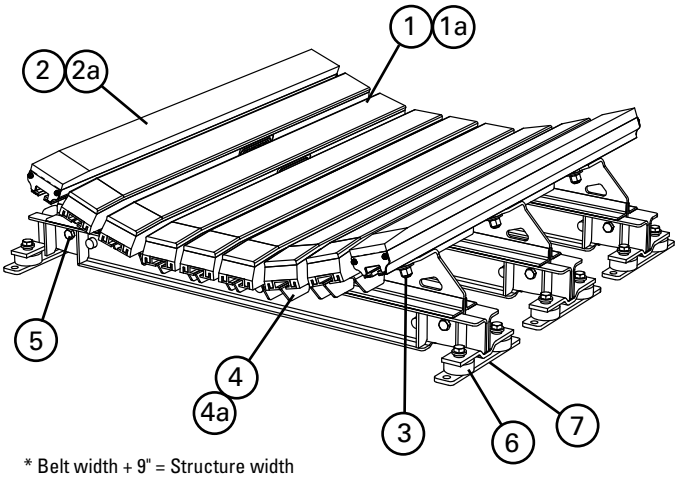

* Belt width + 9" = Structure width

Impact Bed Size	Cema C or D, 5" IDLERS	CEMA C or D, 6" IDLERS
DRX750: 24"- 36"	Shim idler up 1/2"	No Kits Required
DRX750: 42"- 72"	No Kits Required	Use (1) SHIM-KITM; Shim up 0.5"

Impact Bed Size	CEMA E, 6" IDLERS	CEMA E, 7" IDLERS
DRX750: 36"-60"	Use (3) SHIM-KITM; Shim up 1.5"	Use (4) SHIM-KITM; Shim up 2"
DRX750: 72"	Use (4) SHIM-KITM; Shim up 2"	Use (5) SHIM-KITM; Shim up 2.5"

Replacement Parts

REF	DESCRIPTION	ORDERING NUMBER	ITEM CODE	WT. LBS.
1	Impact Bar, 4'	IB4	76926	17.0
1a	Impact Bar, 5'	IB5	76927	21.2
2	Slider Bar, 4' (1.2M)	SB4	78789	20.0
2a	Slider Bar, 5' (1.5M)	SB5	78790	24.1
3	Impact Bar Bolt Kit (incl. (1) ea 5/8" carriage bolt, square washer, flat washer, lock washer, Nylock nut)	IBBK	76928	0.5
4	Impact Bar Support – M 4' (incl. (1) bar support, (2) ea carriage bolt, square washer, lock washer, Nylock nut)	IBS-M4	76931	16.9
4a	Impact Bar Support – M 5' (incl. (1) bar support, (2) ea carriage bolt, square washer, lock washer, Nylock nut)	IBS-M5	76932	21.2
5	Sliding Support Arm Bolt Kit (incl. (2) 2" bolts, (2) lock washers, (2) Nylock nuts)	ISABK-LMH	77529	2.0
6	Isolation Mount Kit	IMK	76936	3.8
7	DRX750 Shim Kit (incl. 6 shims)	SHIM-KITM	77549	20.4

Lead time: 1 working day

Replacement Bars, Bar Supports and Bolt Kits Required per Belt Width - DRX750

in.	24	30	36	42	48	54	60	72
mm	600	750	900	1050	1200	1350	1500	1800
Slider Bars Required	2	2	2	2	2	2	2	4
Impact Bars Required	4	4	5	7	8	10	11	12
Impact Bar Supports Required	4	4	5	7	8	10	11	12
Impact Bar Bolt Kits Required	26	26	31	41	46	56	61	72

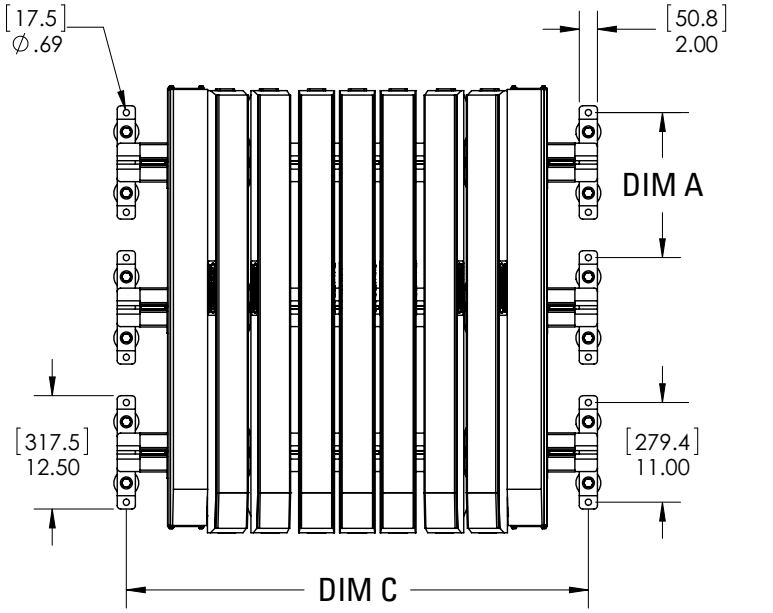

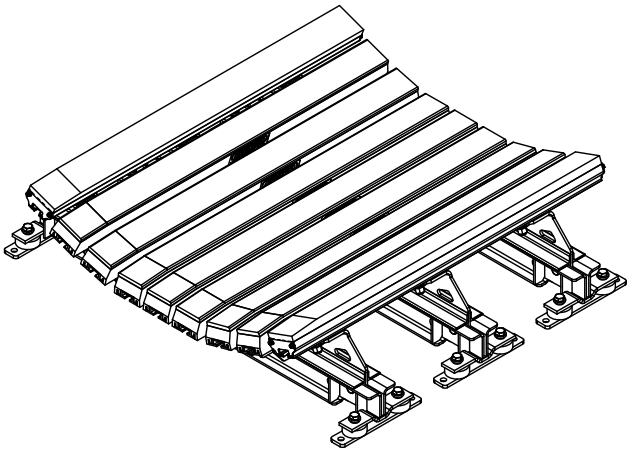

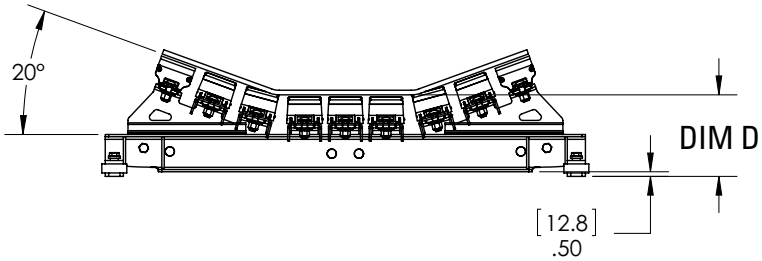

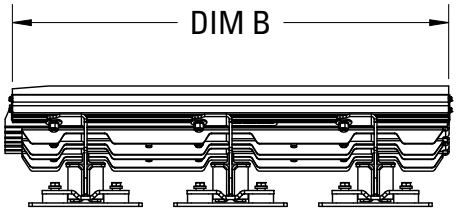

Bed Length 4′ (1.2 M)				Bed Length 5′ (1.5 M)				Bed Width		Dim C		Dim D	
Dim A		Dim B		Dim A		Dim B							
in.	mm	in.	mm	in.	mm	in.	mm	in.	mm	in.	mm	in.	mm
16	406.4	48.14	1222.8	22	558.8	58.38	1482.9	24	600	33	838	9	229
								30	750	39	991	9	229
								36	900	45	1143	9	229
								42	1050	51	1295	9	229
								48	1200	57	1448	9	229
								54	1350	63	1600	9.25	235
								60	1500	69	1753	9.25	235
								72	1800	81	2057	9.5	241

Product Ordering Information

DRX1500 CEMA D construction

BELT WIDTH		TONNAGE RATING (ton/hr)	4' (1.2 M) BEDS, 20° TROUGH			4' (1.2 M) BEDS, 35° TROUGH		
in.	mm		ORDERING NUMBER	ITEM CODE	WT. LBS	ORDERING NUMBER	ITEM CODE	WT. LBS.
24	600	12,800	DRXH-24-420	76880	503.0	DRXH-24-435	76896	503.0
30	750	12,800	DRXH-30-420	76881	545.0	DRXH-30-435	76897	545.0
36	900	14,900	DRXH-36-420	76882	628.0	DRXH-36-435	76898	628.0
42	1050	19,200	DRXH-42-420	76883	806.0	DRXH-42-435	76899	806.0
48	1200	21,300	DRXH-48-420	76884	847.0	DRXH-48-435	76900	847.0
54	1350	25,600	DRXH-54-420	76885	977.0	DRXH-54-435	76901	977.0
60	1500	27,700	DRXH-60-420	76886	1,066.0	DRXH-60-435	76902	1,066.0
72	1800	29,900	DRXH-72-420	76887	1,210.0	DRXH-72-435	76903	1,210.0

Lead time: 2 weeks

Product Notes:

- Rated for impacts up to 1500 lb-ft (200 kg-m)
- Rated for belt speeds up to 1000 fpm (5m/s)
- Slide-out serviceability
- Velocity Reduction Technology provides multiple points of protection
- Alternative trough angles or picking idler profiles available by special quote

BELT WIDTH		TONNAGE RATING (ton/hr)	5' (1.5 M) BEDS, 20° TROUGH			5' (1.5 M) BEDS, 35° TROUGH		
in.	mm		ORDERING NUMBER	ITEM CODE	WT. LBS	ORDERING NUMBER	ITEM CODE	WT. LBS.
24	600	12,800	DRXH-24-520	76888	558.0	DRXH-24-535	76904	558.0
30	750	12,800	DRXH-30-520	76889	601.0	DRXH-30-535	76905	601.0
36	900	14,900	DRXH-36-520	76890	692.0	DRXH-36-535	76906	692.0
42	1050	19,200	DRXH-42-520	76891	896.0	DRXH-42-535	76907	896.0
48	1200	21,300	DRXH-48-520	76892	937.0	DRXH-48-535	76908	937.0
54	1350	25,600	DRXH-54-520	76893	1,084.0	DRXH-54-535	76909	1,084.0
60	1500	27,700	DRXH-60-520	76894	1,181.0	DRXH-60-535	76910	1,181.0
72	1800	29,900	DRXH-72-520	76895	1,334.0	DRXH-72-535	76911	1,334.0

Lead time: 2 weeks

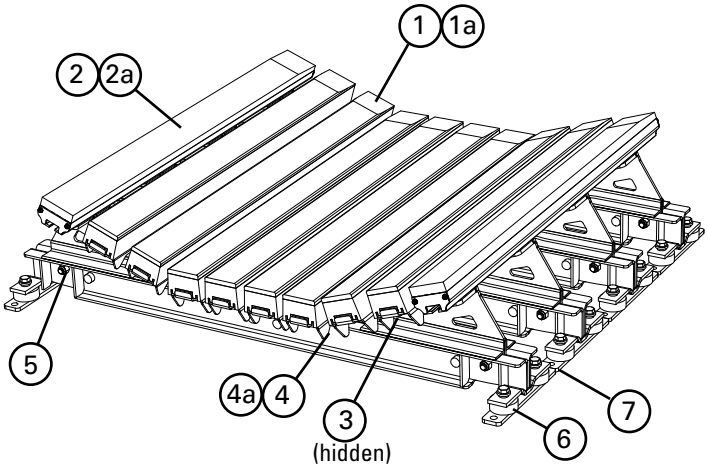

* Belt width + 9" = Structure width

Impact Bed Size	Cema C or D, 5" IDLERS	CEMA C or D, 6" IDLERS
DRX1500: 24"- 36"	Shim idler up 1/2"	No Kits Required
DRX1500: 42"- 72"	No Kits Required	Use (1) SHIM-KITH; Shim up 0.5"

Impact Bed Size	CEMA E, 6" IDLERS	CEMA E, 7" IDLERS
DRX1500: 36"-60"	Use (3) SHIM-KITH; Shim up 1.5"	Use (4) SHIM-KITH; Shim up 2"
DRX1500: 72"	Use (4) SHIM-KITH; Shim up 2"	Use (5) SHIM-KITH; Shim up 2.5"

Replacement Parts

REF	DESCRIPTION	ORDERING NUMBER	ITEM CODE	WT. LBS.
1	Impact Bar, 4'	IB4	76926	17.0
2	Impact Bar, 5'	IB5	76927	21.2
3	Slider Bar, 4' (1.2M)	SB4	78789	20.0
3a	Slider Bar, 5' (1.5M)	SB5	78790	24.1
4	Impact Bar Bolt Kit incl. (1) ea 5/8" carriage bolt, square washer, flat washer, lock washer, Nylock nut	IBBK	76928	0.5
5	Impact Bar Support – H 4' incl. (1) bar support, (2) ea carriage bolt, square washer, lock washer, Nylock nut	IBS-H4	76933	16.6
6	Impact Bar Support – H 5' incl. (1) bar support, (2) ea carriage bolt, square washer, lock washer, Nylock nut	IBS-H5	76934	21.0
7	Sliding Support Arm Bolt Kit incl. (2) 2" bolts, (2) lock washers, (2) Nylock nuts	ISABK-LMH	77529	2.0
8	Isolation Mount Kit	IMK	76936	3.8
9	DRX1500 Shim Kit (incl. 8 shims)	SHIM-KITH	77550	27.2

Lead time: 1 working day

Replacement Bars and Bolt Kits Required per Belt Width - DRX1500

in.	24	30	36	42	48	54	60	72
mm	600	750	900	1050	1200	1350	1500	1800
Slider Bars Required	2	2	2	2	2	2	2	4
Impact Bars Required	4	4	5	7	8	10	11	12
Impact Bar Supports Required	4	4	5	7	8	10	11	12
Impact Bar Bolt Kits Required	32	32	38	50	56	68	74	88

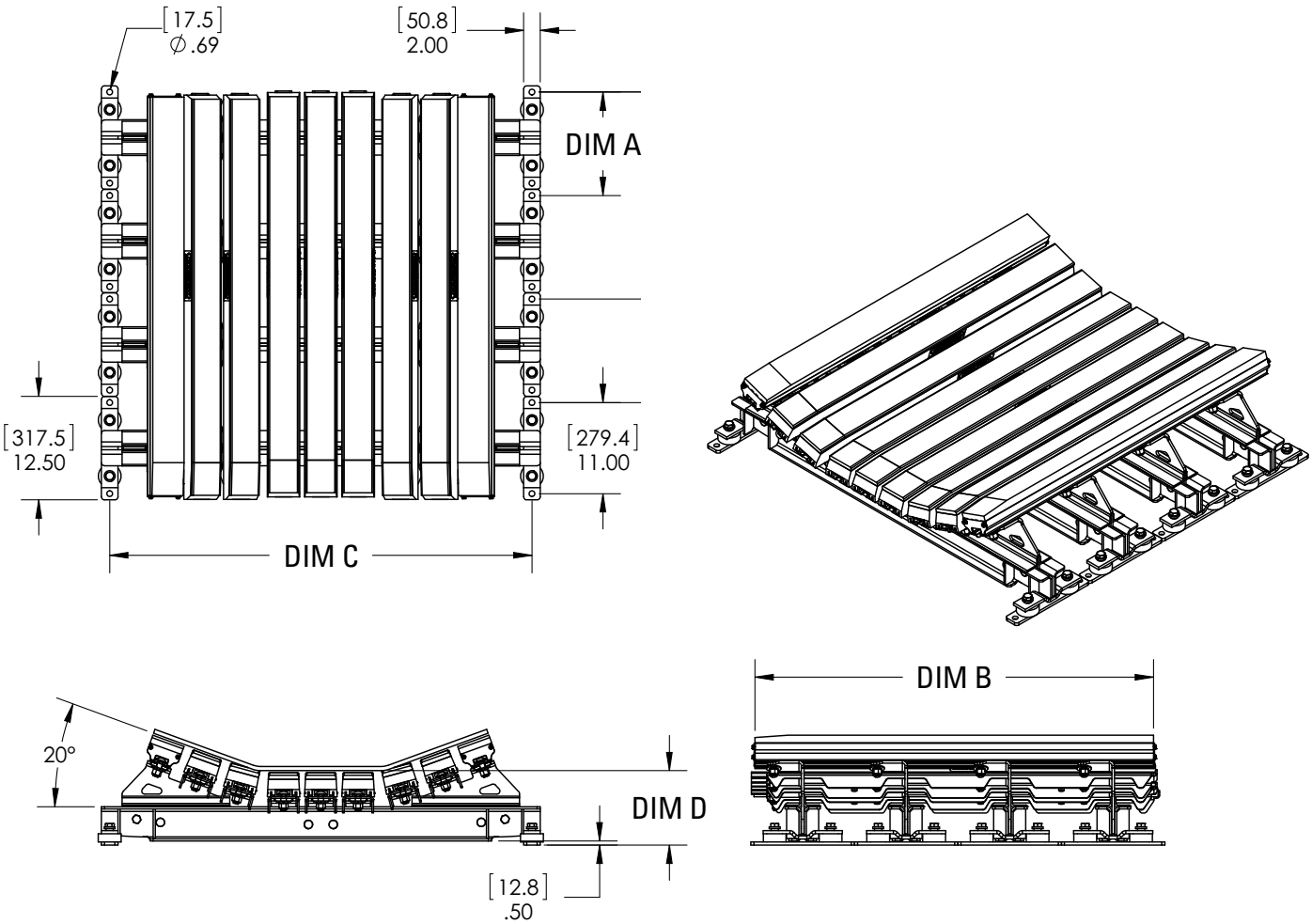

Bed Length 4′ (1.2 M)				Bed Length 5′ (1.5 M)				Bed Width		Dim C		Dim D	
Dim A		Dim B		Dim A		Dim B							
in.	mm	in.	mm	in.	mm	in.	mm	in.	mm	in.	mm	in.	mm
12.5	317.5	48.14	1222.8	16	406.4	58.38	1482.9	24	600	33	838	9	229
								30	750	39	991	9	229
								36	900	45	1143	9	229
								42	1050	51	1295	9	229
								48	1200	57	1448	9	229
								54	1350	63	1600	9.25	235
								60	1500	69	1753	9.25	235
								72	1800	81	2057	9.5	241

Product Ordering Information

DRX3000 CEMA E construction

BELT WIDTH		TONNAGE RATING (ton/hr)	5' (1.5 M) BEDS, 20° TROUGH			5' (1.5 M) BEDS, 35° TROUGH		
in.	mm		ORDERING NUMBER	ITEM CODE	WT. LBS	ORDERING NUMBER	ITEM CODE	WT. LBS.
42	1050	28,700	DRXD-42-520	76912	1,351.0	DRXD-42-535	76919	1,351.0
48	1200	31,900	DRXD-48-520	76913	1,407.0	DRXD-48-535	76920	1,407.0
54	1350	38,300	DRXD-54-520	76914	1,568.0	DRXD-54-535	76921	1,568.0
60	1500	41,500	DRXD-60-520	76915	1,676.0	DRXD-60-535	76922	1,676.0
72	1800	44,700	DRXD-72-520	76916	2,098.0	DRXD-72-535	76923	2,098.0
84	2100	51,100	DRXD-84-520	76917	2,261.0	DRXD-84-535	76924	2,261.0
96	2400	63,900	DRXD-96-520	76918	2,609.0	DRXD-96-535	76925	2,609.0

Lead time: 4 weeks

Product Notes:

- For extreme impact applications up to 3000 lb-ft (lump size x drop height).
- Rated for belt speeds up to 1000 fpm (5m/s)
- Impact Energy Absorbers compress up to 3" (75mm) to absorb extreme impact energy to minimize damaging forces and protect the belt.
- Alternative trough angles or picking idler profiles available by special quote

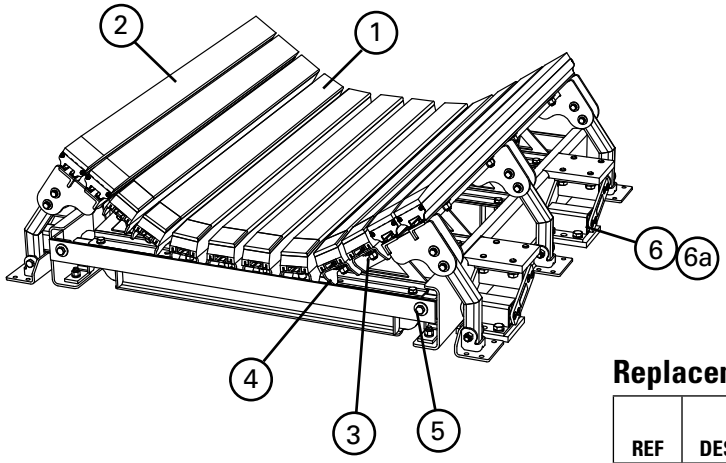

Replacement Parts

REF	DESCRIPTION	ORDERING NUMBER	ITEM CODE	WT. LBS.
1	Impact Bar, 5' (1/2" UHMW)	IB5	76927	21.2
2	Slider Bar, 5' (1.5M)	SB5	78790	24.1
3	Impact Bar Bolt Kit incl. (1) ea 5/8" carriage bolt, square washer, flat washer, lock washer, Nylock nut	IBBK	76928	0.5
4	Impact Bar Support - D 5' incl. (1) bar support, (2) ea carriage bolt, square washer, lock washer, Nylock nut	IBS-D5	77530	21.0
5	Sliding Support Arm Bolt Kit incl. (4) 1-1/2" bolts, (2) 2" bolts, (6) lock washers, (6) Nylock nuts	ISABK	76935	2.0
6	Impact Energy Absorber 42-60	IEA-42-60	76937	42.0
6a	Impact Energy Absorber 72-96	IEA-72-96	76938	66.0

Lead time: 1 working day

* Belt width + 9" = Structure width

Replacement Bars and Bolt Kits Required per Belt Width - DRX3000

in.	42	48	54	60	72	84	96
mm	1050	1200	1350	1500	1800	2100	2400
Slider Bars Required	2	2	4	4	4	4	4
Impact Bars Required	8	8	8	9	12	12	16
Impact Bar Supports Required	8	8	8	9	12	12	16
Impact Bar Bolt Kits Required	56	56	64	70	88	88	112

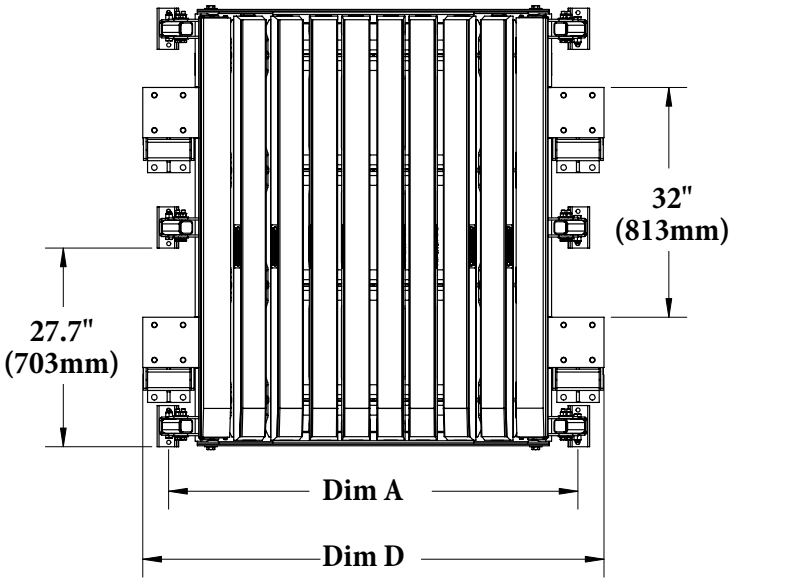

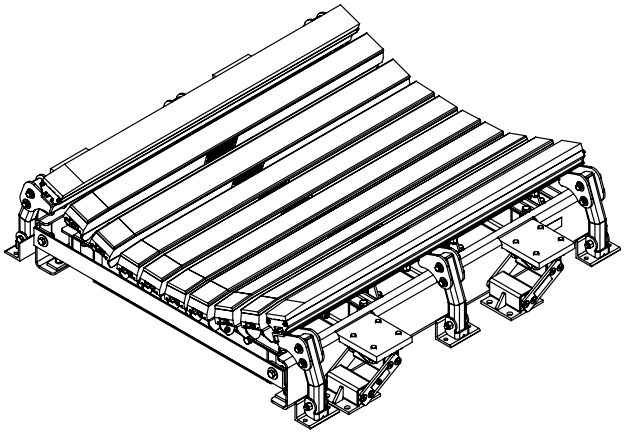

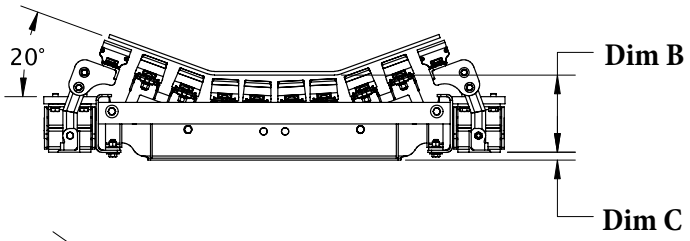

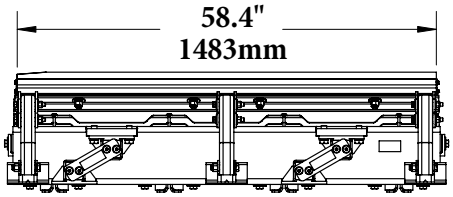

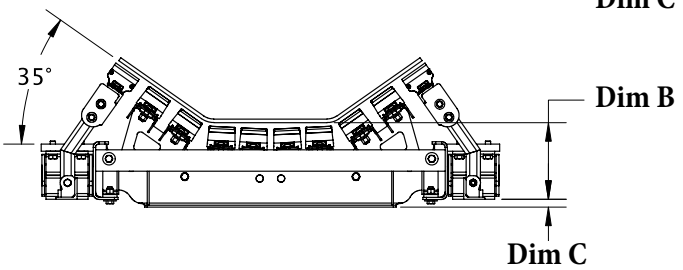

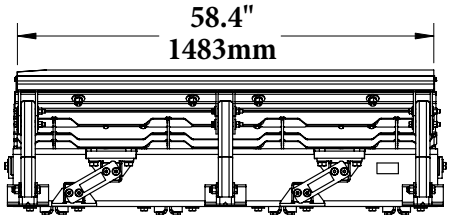

Bed Width		Dim A		Dim B		Dim C		Dim D	
in.	mm	in.	mm	in.	mm	in.	mm	in.	mm
42	1050	51	1295.4	10.75	273	1.09	27.7	58.25	1479.6
48	1200	57	1447.8	10.75	273	1.09	27.7	64.25	1632.0
54	1350	63	1600.2	10.75	273	1.09	27.7	70.25	1784.4
60	1500	69	1752.6	10.75	273	1.09	27.7	76.25	1936.8
72	1800	81	2057.4	11.50	292.1	1.15	29.1	90.25	2292.4
84	2100	93	2362.2	11.75	298.5	1.15	29.1	102.25	2597.2
96	2400	105	2667.0	11.75	298.5	1.15	29.1	114.25	2902.0

Impact Bars with 1" UHMW

For impact beds that have heavy abrasive wear on the impact bars.

DESCRIPTION	ORDERING NUMBER	ITEM CODE	WT. LBS.
4' Impact Bar with 1" UHMW	IB4-1U	76965	17.0
5' Impact Bar with 1" UHMW	IB5-1U	76966	21.2

Lead time: 1 working day

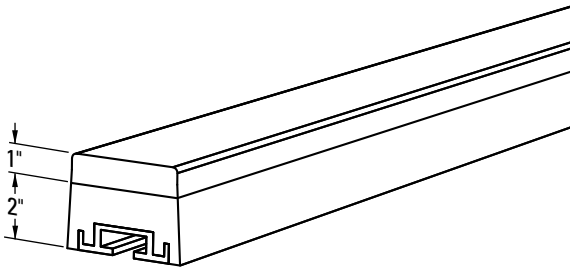

Impact Bar with 1" UHMW Cover

Impact Bar Bolt Kit for Other OEM Impact Beds*

1/2" carriage bolt, square washer, flat washer and Nylock nut to mount DRX Impact Bars on other OEM beds that use 1/2" T-bolts.
Count cross stringers on OEM bed (example: 3 cross stringers require 3 Bolt Kits per impact bar)

DESCRIPTION	ORDERING NUMBER	ITEM CODE	WT. LBS.
OEM Impact Bar Bolt Kit	OIBBK	76950	0.5

*Kit includes 1 ea. bolt, square washer, flat washer and Nylock nut.
Lead time: 1 working day

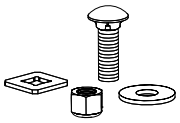

Optional Impact Bar Bolt Kit

Impact Bed Handy Wrench

A ratcheting wrench with 2 common socket sizes: 3/4" & 15/16" (19mm & 24mm) for installation and maintenance of impact beds.

DESCRIPTION	ORDERING NUMBER	ITEM CODE	WT. LBS.
Impact Bed Handy Wrench	HW-IMPB	76939	1.6

Lead time: 1 working day

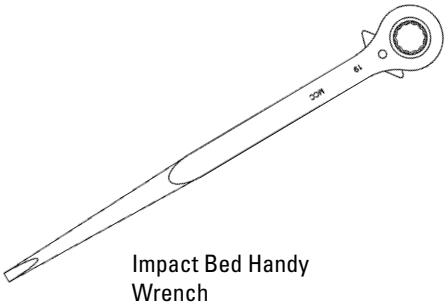

Impact Bed Handy Wrench

MODEL	APPLICATION RANGE
Belt Positioner™	Return side only, 800 PIW max tension on Small, Medium and Large; 1200 PIW max tension on Extra Large. Also works on reversing belts.
PTEZ™	Medium-duty belts up to 1600 PIW max tension. Also works on reversing belts. Belt width 18" – 48" (450 – 1200mm).
PT Smart™	Medium-duty belts up to 1600 PIW max tension. Belt width 42" – 84" (1050 – 2100mm). Belt thickness 1" (25mm) maximum.
HD PTEZ™	Medium-duty belts up to 2400 PIW max tension. Belt widths + 9" (225mm) idler. Belt thickness 1" (25mm) maximum. Also works on reversing belts.
PT Max™	Heavy-duty belts up to 3000 PIW max Generally 3/4" – 1" thick (19mm – 25mm) Belt width 24" – 60" (600 – 1500mm)
HD PT Max™	Heavy-duty belts up to 6000 PIW max tension. Belt width 54" – 84" (1350 – 2100mm)

Belt Positioner™

PTEZ™

PT Smart™ Standard

HD PTEZ™

PT Max™ Top Side

PT Max™ Return Side

Conveyor Criteria	Belt Positioner™	PTEZ™	Heavy Duty PTEZ™	PT Smart™	PT Max™	Heavy Duty PT Max™	Super Duty PT Max™
Top side mistracking	No	No	No	No	Yes	Yes	Yes
Return side mistracking	Yes	Yes	Yes	Yes	Yes	Yes	Yes
Reversing	Yes	Yes	Yes	No	No	No	No
Belt mistracking to one side	Better	Better	Better	Better	Better	Better	Better
Belt mistracking to both sides	Acceptable	Better	Better	**Best**	**Best**	**Best**	**Best**
Inconsistent tracking problem	Good	Better	Better	**Best**	**Best**	**Best**	**Best**
Belt is cupped (heavy)	**Best** ‡	Better ‡	Better ‡	Better	Better	Better	Better
Belt has edge damage	**Best**	**Best**	**Best**	Good	Good	Good	Good
Ease of Installation	**Best**	Better	Better	Good	Good	Good	Good
Belt has low running tension (150-300 PIW)	Good	Good	Good	Good	Good	N/A	N/A
Belt has medium running tension (300-1600 PIW)	Better	Better	Better	Better	**Best**	**Best**	**Best**
Belt has high running tension (1600+ PIW)	N/A	N/A	N/A	N/A	Better	**Best**	**Best**
Approx. "upstream" effect *Δ	50' (15 M)	20' (6 M)	20' (6 M)	20' (6 M)	50' (15 M)	50' (15 M)	50' (15 M)
Approx. "downstream" effect *Δ	50' (15 M)	100' – 120' (30 – 36 M)	100' – 120' (30 – 36 M)	120' – 150' (36 – 45 M)	150' – 200' (45 – 61 M)	150' – 200' (45 – 61 M)	150' – 200' (45 – 61 M)

‡ Installed on the clean side of the return belt
* Typical results; actual results may vary
Δ Disc idlers have the potential to reduce these numbers

Product Ordering Information

Belt Positioners with Rubber Rollers

SIZE	BELT WIDTH (Min-Max) in.	BELT WIDTH (Min-Max) mm	POSITIONER WIDTH (Min-Max) in.	POSITIONER WIDTH (Min-Max) mm	ORDERING NUMBER	ITEM CODE	WT. LBS.
Small	18-24	450-600	24-34	600-850	RBP1R-S	90646	60.5
Medium	30-48	750-1200	34-56	850-1400	RBP1R-M	90647	73.5
Large	54-72	1350-1800	56-83	1400-2075	RBP1R-L	90648	94.0
Extra Large	72-96	1800-2400	72-120	1800-3000	RBP1R-XL	90649	182.0

Lead time: 1 working day

Belt Positioners with Steel Rollers

SIZE	BELT WIDTH (Min-Max) in.	BELT WIDTH (Min-Max) mm	POSITIONER WIDTH (Min-Max) in.	POSITIONER WIDTH (Min-Max) mm	ORDERING NUMBER	ITEM CODE	WT. LBS.
Small	18-24	450-600	24-34	600-850	RBP1S-S	74558	69.8
Medium	30-48	750-1200	34-56	850-1400	RBP1S-M	74559	84.6
Large	54-72	1350-1800	56-83	1400-2075	RBP1S-L	74560	109.5
Extra Large	72-96	1800-2400	72-120	1800-3000	RBP1S-XL	74561	199.6

Lead time: 1 working day

Use next larger size for belt widths between ranges.
NOTE: Idler Rollers on sizes S, M and L are 5" (125mm) diameter and rated CEMA D.
Idler Rollers on the XL size are 6" (150mm) diameter and rated CEMA E.

Product Notes:

- The Positioner should be centered between two standard return rollers. For general applications – standard belts up to 72" (1800mm): position the unit no closer than 3' (.9M) to a return roller and no farther than 6' (1.8M).
- Works on the return side of the conveyor using simple angled rollers mounted in a fixed position to quickly and continuously funnel the belt into the correct path.
- A “quick fix” solution for belts that consistently wander to one side.
- Typically installed before the tail pulley to keep the belt centered at the critical loading point. Center loading is the key to solving many top side tracking problems.
- Idler rollers make smooth contact with the return belt’s bottom cover, eliminating excessive wear and damage to the belt’s edges.
- Has no pivoting mechanism to freeze up and cause the unit to stop working.
- Once installed, no further adjustment is required.

Specifications & Guidelines

Belt Width Specifications

SIZE	BELT WIDTH (Min-Max)		POSITIONER WIDTH (Min-Max)	
	in.	mm	in.	mm
Small	18-24	450-600	24-34	600-850
Medium	30-48	750-1200	34-56	850-1400
Large	54-72	1350-1800	56-83	1400-2075
Extra Large	72-96	1800-2400	72-120	1800-3000

Use next larger size for belt widths between ranges.

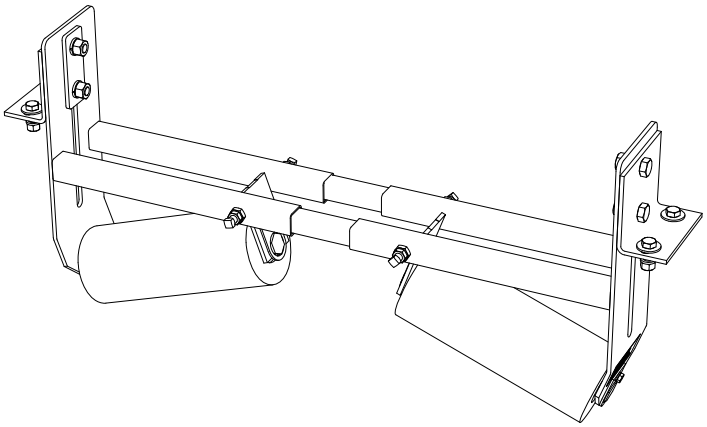

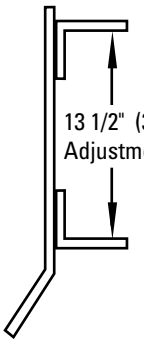

Application Guidelines

- Belt Splice ..... Mechanically Fastened/Vulcanized
- Belt Speed ..... 1000 FPM (5M/sec)
- Belt Direction ..... Reversing

Roller Specifications

SPECIFICATION	Rubber	Steel
Material	STEEL and 3/8" RUBBER	STEEL
Durometer	60	N/A
Rating	CEMA D (XL is CEMA E)	CEMA D (XL is CEMA E)
Bearings	6305 Sealed Ball Bearing	6305 Sealed Ball Bearing
Shaft Diameter	1" (25mm)	1" (25mm)
Wall Thickness	9 Gauge (.148) (XL - 1/4")	9 Gauge (.148) (XL - 1/4")
Specific Gravity	Over 1	Over 1
Working Temperature	-4° to 220° F	-4° to 220° F
	-20° to 104° C	-20° to 104° C
Grease & Chemical Resistance	Good	Good
Sticky Material Performance	Excellent	Good

Roller Dimensions

SIZE	LENGTH		DIAMETER	
	in.	mm	in.	mm
Small	9	225	5	125
Medium	13	325	5	125
Large	19	475	5	125
Extra Large	21	525	6	150

Product Notes:

- Optimal location: no closer than 3' (.9M) and no further than 6' (1.8M) from a return roller.
- All rollers are “sealed for life”. No regreasing maintenance is required.
- MSHA approved.

Replacement Parts List

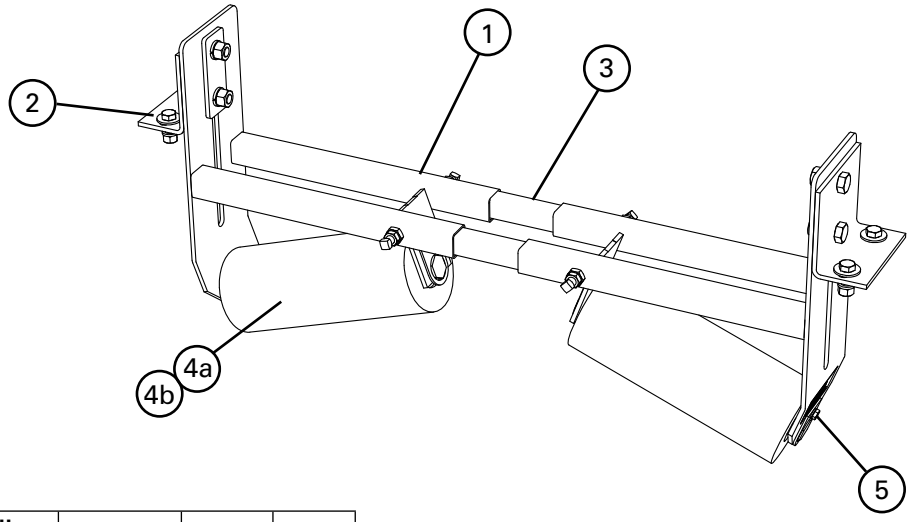

Replacement Parts

REF	DESCRIPTION	BELT WIDTH (Min-Max) in.	BELT WIDTH (Min-Max) mm	ORDERING NUMBER	ITEM CODE	WT. LBS.
1	Small Frame Kit* (1 ea.)	18-24	450-600	RBPFK-S	75522	12.5
	Medium Frame Kit* (1 ea.)	30-48	750-1200	RBPFK-M	75523	14.5
	Large Frame Kit* (1ea.)	54-72	1350-1800	RBPFK-L	75524	19.5
	Extra Large Frame Kit* (1 ea.)	72-96	1800-2400	RBPFK-XL	75525	28.5
2	Mounting Bracket Kit* (1 ea.)			RBPMBK	75526	6.0
3	Small Inner Tube (1 ea.)	18-24	450-600	RBPIT-S	75527	3.0
	Medium Inner Tube (1 ea.)	30-48	750-1200	RBPIT-M	75528	4.5
	Large Inner Tube (1 ea.)	54-72	1350-1800	RBPIT-L	75529	6.5
	Extra Large Inner Tube (1 ea.)	72-96	1800-2400	RBPIT-XL	75530	9.0

* Hardware included
Lead time: 1 working day

Replacement Rollers

REF	DESCRIPTION	ORDERING NUMBER	ITEM CODE	WT. LBS.
4a	Small Rubber Roller	RBPRR-S	90650	7.9
	Medium Rubber Roller	RBPRR-M	90651	11.0
	Large Rubber Roller	RBPRR-L	90652	15.5
	Extra Large Rubber Roller	RBPRR-XL	90653	27.8
4b	Small Steel Roller	RBPSR-S	74562	12.2
	Medium Steel Roller	RBPSR-M	74563	16.5
	Large Steel Roller	RBPSR-L	74564	23.2
	Extra Large Steel Roller	RBPSR-XL	74565	36.6
5	Roller Retainer Kit *	RBPRET	73163	0.5

Idler rollers on sizes S, M and L are 5" (125mm) diameter and rated CEMA D.
Idler rollers on the XL size are 6" (150mm) diameter and rated CEMA E.
*Roller Retainer Kit not required for XL rollers (SDX style).
Lead time: 1 working day

Product Ordering Information

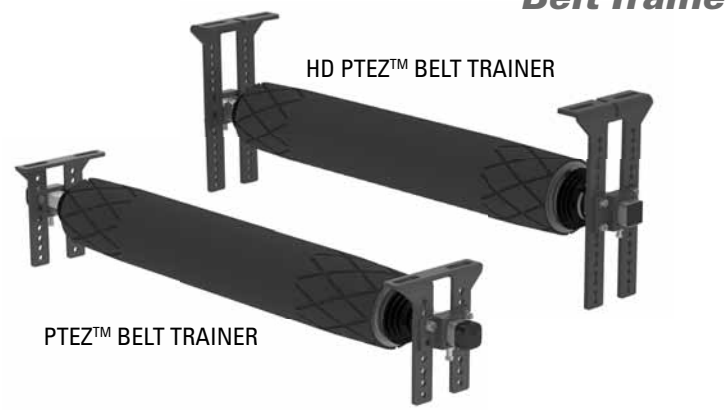

PTEZ™ Belt Trainer

BELT WIDTH in.	BELT WIDTH mm	ORDERING NUMBER	ITEM CODE	WT. LBS.
18	450	PTEZ-18	90265	120.0
24	600	PTEZ-24	90266	130.0
30	750	PTEZ-30	90267	140.0
36	900	PTEZ-36	90268	150.0
42	1050	PTEZ-42	90269	160.0
48	1200	PTEZ-48	90270	170.0

Lead time: 1 working day

HD PTEZ™ Belt Trainer

BELT WIDTH in.	BELT WIDTH mm	ORDERING NUMBER	ITEM CODE	WT. LBS.
42	1050	PTEZHD-42/1050	90616	228.0
48	1200	PTEZHD-48/1200	90617	252.0
54	1350	PTEZHD-54/1350	90618	277.0
56	1400	PTEZHD-56/1400	90795	285.0
60	1500	PTEZHD-60/1500	90619	301.0
64	1600	PTEZHD-64/1600	90796	317.0
72	1800	PTEZHD-72/1800	90620	349.0
80	2000	PTEZHD-80/2000	90797	382.0
84	2100	PTEZHD-84/2100	90621	398.0

Lead time: 1 working day

HD PTEZ™ UG Belt Trainer

BELT WIDTH in.	BELT WIDTH mm	ORDERING NUMBER	ITEM CODE	WT. LBS.
42	1050	PTEZHD-42/1050-UG	90798	230.0
48	1200	PTEZHD-48/1200-UG	90799	254.0
54	1350	PTEZHD-54/1350-UG	90800	279.0
60	1500	PTEZHD-60/1500-UG	90801	303.0
72	1800	PTEZHD-72/1800-UG	90802	351.0

Lead time: 1 working day

Product Notes:

- Simple adjustable mounting brackets ensure quick and accurate installation.
- Urethane roller cover ensures long-lasting performance.
- Works in multiple applications, yet economical. Single-direction and reversing belts. Wet or dry conditions. Belts with edge damage or wear. Belts mistracking to one or both sides.
- Easy ordering and installation. Enhanced to meet instant demands for training solutions, the PTEZ is available on a one-working-day lead time. The simple brackets and component construction also ensure a quick and easy installation.
- Uses tapered and patterned roller to activate the trainer movement. Pivot influences direction while Tilt increases the tension on the mistracked side – the result is two forces quickly moving the belt back to center.
- Works with mechanically fastened or vulcanized belts.

Replacement Parts List

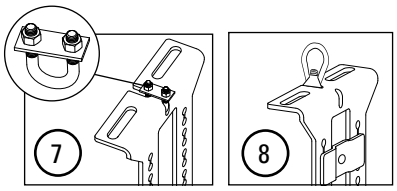

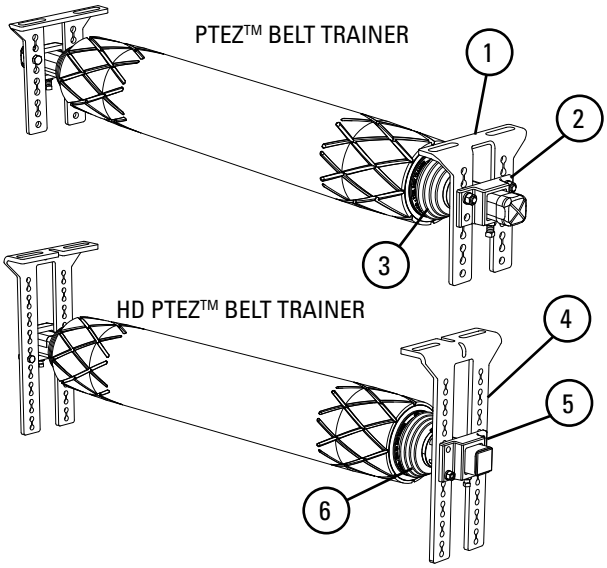

PTEZ™ Replacement Parts

REF	DESCRIPTION	ORDERING NUMBER	ITEM CODE	WT. LBS.
1	PTEZ Mounting Bracket Kit (2 ea.)	PTEZMB	90351	8.0
2	PTEZ Pole Bracket Kit (2 ea.)	PTEZPB	90352	6.0
3	PTEZ Dust Cover Kit (2 ea.)	PTEZDC	90353	1.0
4	PTEZ HD Mount Bracket Kit (2 ea.)	PTEZHD-MBK	90803	19.0
5	PTEZ HD Pole Bracket Kit (2 ea.)	PTEZHD-PBK	90804	8.0
6	PTEZ HD Dust Cover Kit (2 ea.)	PTEZHD-DCK	90805	1.0
7	PTEZ HD Wire Rope Bolt Kit (2 ea.)	PTEZHD-WRBK	90806	1.0
8	PTEZ HD J Bolt Bracket Kit (2 ea.)	PTEZHD-JBBK	90807	2.0

Lead time: 1 working day
*Bracket set for 1 roller

Specifications & Guidelines

PART NUMBER	BELT WIDTH	DIM "A"	DIM "B"
90265	18"	18.75" [476mm]	36" [914mm]
90266	24"	24.75" [629mm]	42" [1067mm]
90267	30"	30.75" [781mm]	48" [1219mm]
90268	36"	36.75" [933mm]	54" [1372mm]
90269	42"	42.75 [1086mm]	60" [1524mm]
90270	48"	48.75 [1238mm]	66" [1676mm]

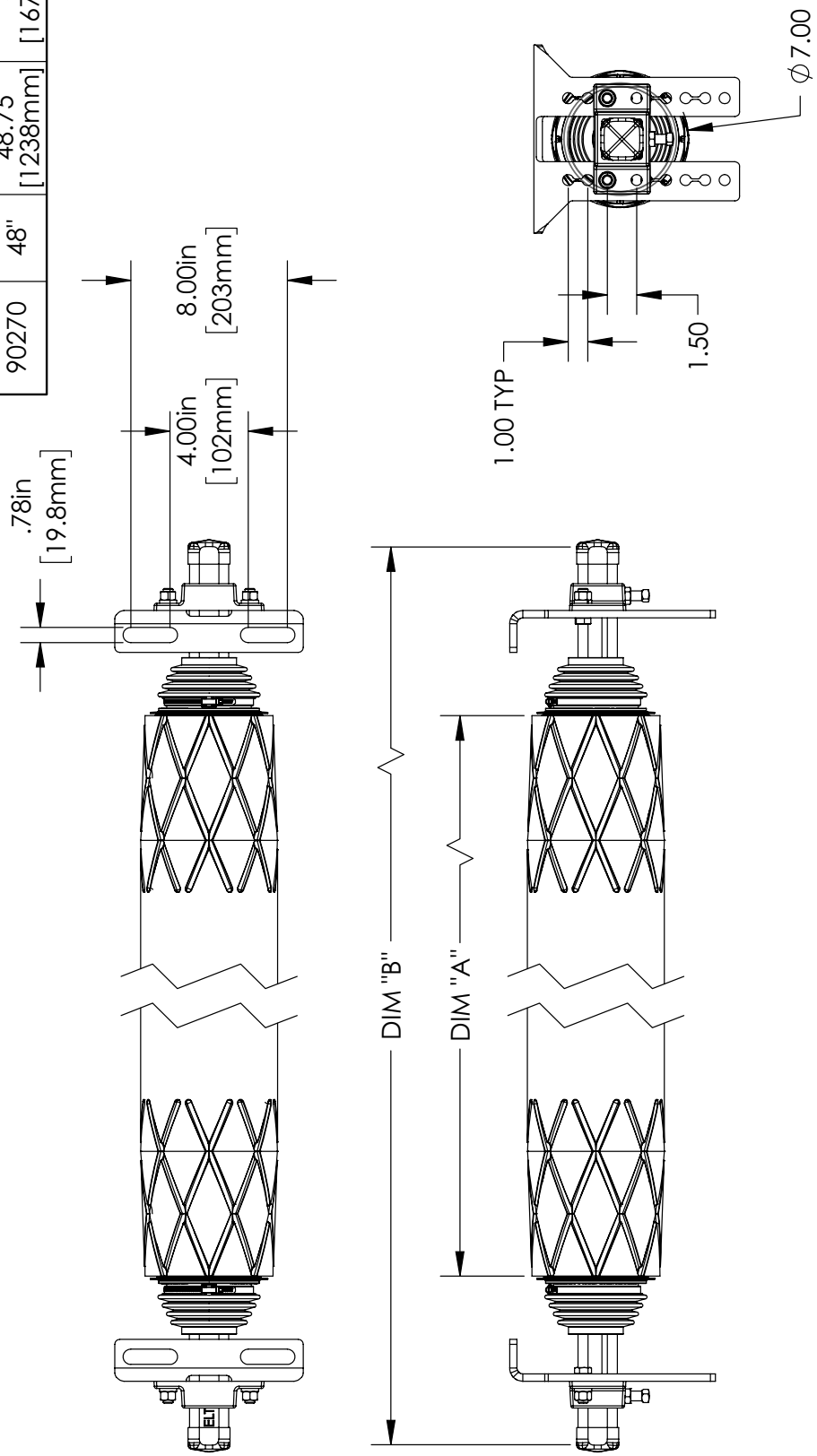

SPECIFICATIONS

BELT WIDTH (in)	BELT WIDTH (mm)	ROLL LENGTH 'A' (in)	ROLL LENGTH 'A' (mm)	SHAFT LENGTH 'B' (in)	SHAFT LENGTH 'B' (mm)	ORDERING NUMBER	ITEM CODE
42	1050	42.75	1086	60	1524	PTEZHD-42/1050	90616
48	1200	48.75	1238	66	1676	PTEZHD-48/1200	90617
54	1350	54.75	1391	72	1829	PTEZHD-54/1350	90618
56	1400	56.75	1441	74	1880	PTEZHD-56/1400	90795
60	1500	60.75	1543	78	1981	PTEZHD-60/1500	90619
64	1600	64.75	1645	82	2083	PTEZHD-64/1600	90796
72	1800	72.75	1848	90	2286	PTEZHD-72/1800	90620
80	2000	80.75	2051	98	2489	PTEZHD-80/2000	90797
84	2100	84.75	2153	102	2591	PTEZHD-84/2100	90621

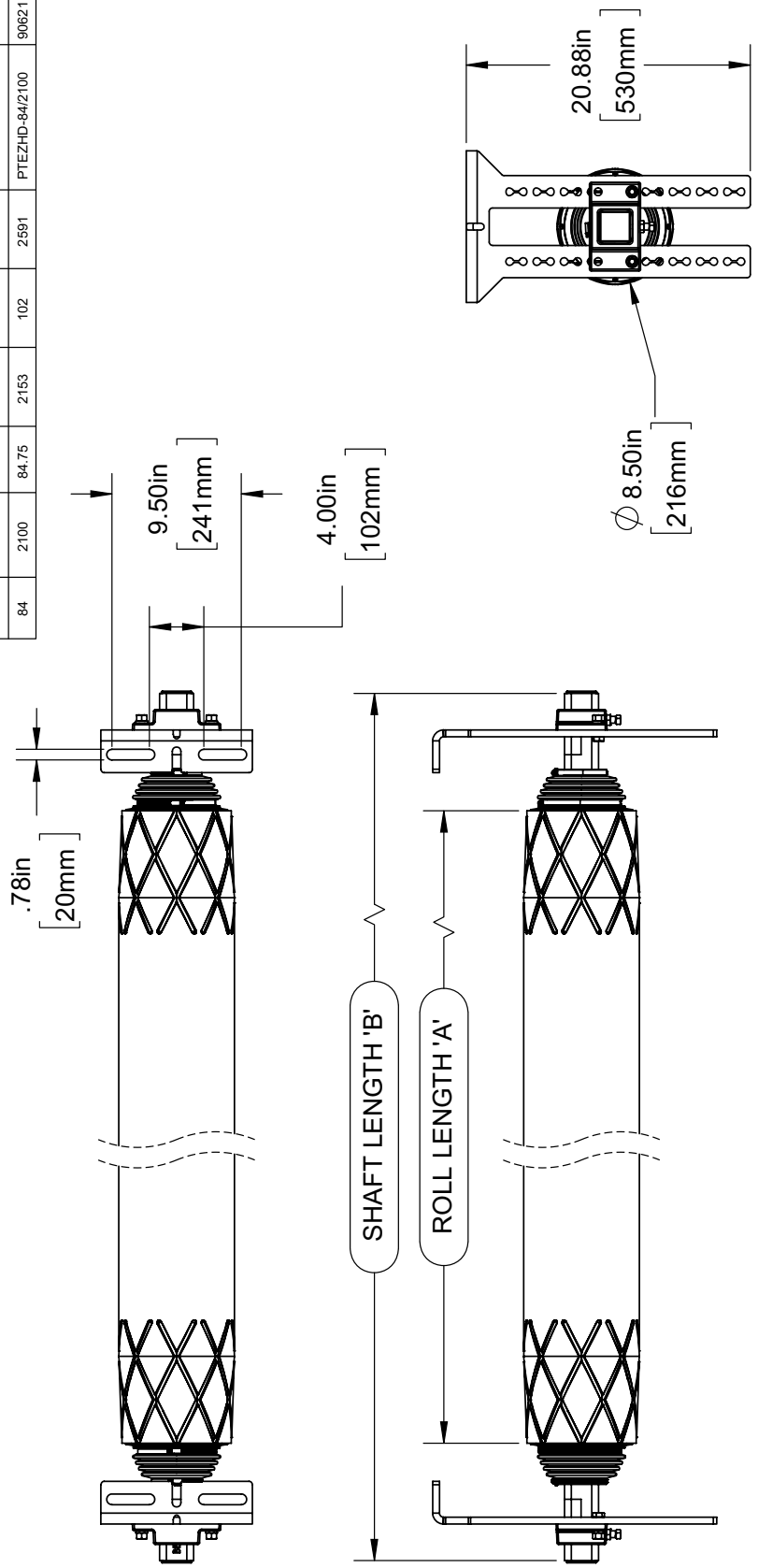

SPECIFICATIONS

BELT WIDTH (in)	BELT WIDTH (mm)	ROLL LENGTH 'A' (in)	ROLL LENGTH 'A' (mm)	SHAFT LENGTH 'B' (in)	SHAFT LENGTH 'B' (mm)	ORDERING NUMBER	ITEM CODE
42	1050	42.75	1086	60	1524	PTEZHD-42/1050-UG	90798
48	1200	48.75	1238	66	1676	PTEZHD-48/1200-UG	90799
54	1350	54.75	1391	72	1829	PTEZHD-54/1350-UG	90800
60	1500	60.75	1543	78	1981	PTEZHD-60/1500-UG	90801
72	1800	72.75	1848	90	2286	PTEZHD-72/1800-UG	90802

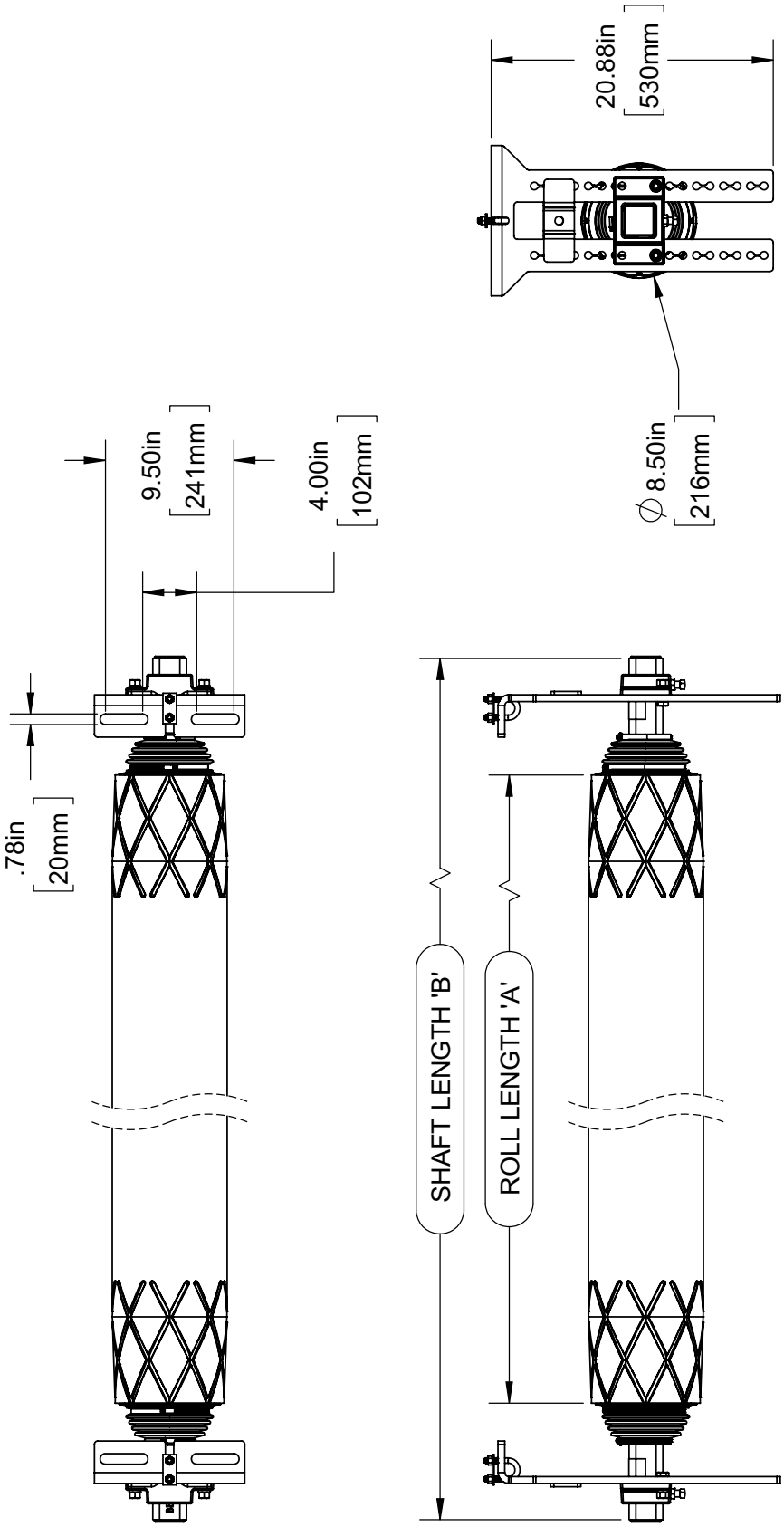

Product Ordering Information

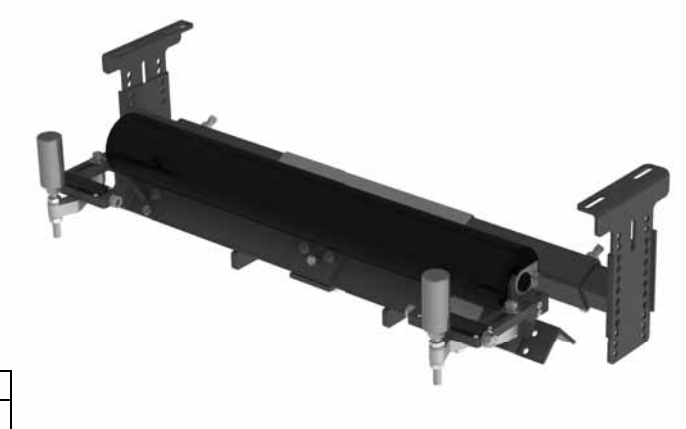

PT SMART™ STANDARD BELT TRAINER (Roller Included)

PT Smart™ Belt Trainer

BELT TRAINER COMPLETE					REPLACEMENT ROLLERS		
BELT WIDTH		ORDERING NUMBER	ITEM CODE	WT. LBS.	ORDERING NUMBER	ITEM CODE	WT. LBS.
in.	mm						
18	450	PTS-18R	77664	121.0	PTS-RR21	77680	22.0
24	600	PTS-24R	77665	141.0	PTS-RR27	77681	27.0
30	750	PTS-30R	77666	154.0	PTS-RR33	77682	32.2
36	900	PTS-36R	77667	169.0	PTS-RR39	77683	36.0
42	1050	PTS-42R	77668	186.0	PTS-RR45	77684	41.5
48	1200	PTS-48R	77669	197.0	PTS-RR51	77685	45.0
54	1350	PTS-54R	77670	210.0	PTS-RR57	77686	47.5
60	1500	PTS-60R	77671	224.0	PTS-RR63	77687	53.0
72	1800	PTS-72R	77672	242.0	PTS-RR75	77689	57.0

Lead time: 1 working day

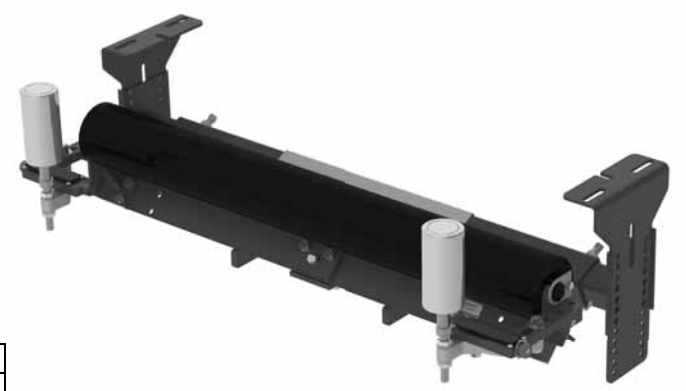

PT SMART™ UNDERGROUND STRUCTURE BELT TRAINER (Roller Included)

PT Smart™ Underground Structure Belt Trainer

BELT TRAINER COMPLETE					REPLACEMENT ROLLERS		
BELT WIDTH		ORDERING NUMBER	ITEM CODE	WT. LBS.	ORDERING NUMBER	ITEM CODE	WT. LBS.
in.	mm						
30	750	PTS-30R-UG	77673	174.0	PTS-RR39	77683	36.0
36	900	PTS-36R-UG	77674	188.0	PTS-RR45	77684	41.5
42	1050	PTS-42R-UG	77675	196.0	PTS-RR51	77685	45.0
48	1200	PTS-48R-UG	77676	208.0	PTS-RR57	77686	47.5
54	1350	PTS-54R-UG	77677	220.0	PTS-RR63	77687	53.0
60	1500	PTS-60R-UG	77678	255.0	PTS-RR69	77688	57.0
72	1800	PTS-72R-UG	77679	265.0	PTS-RR81	77690	81.0

Lead time: 1 working day

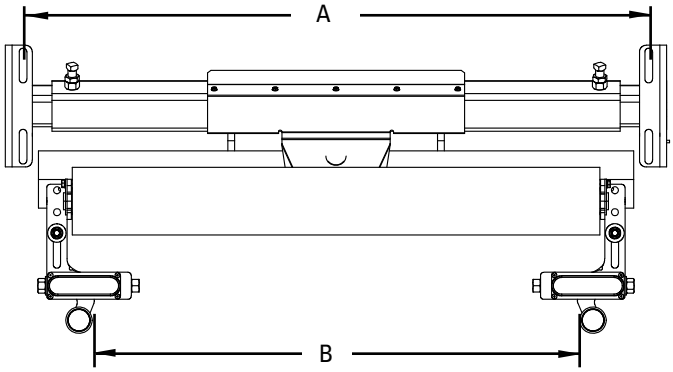

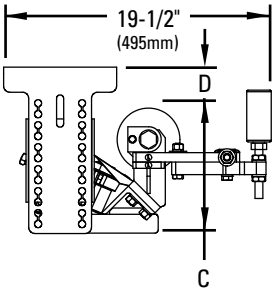

PT Smart Standard

Belt Width in.	Belt Width mm	Item Code	A	B	C	D (vertical adjustment)
18	450	77664	23-35" (575-875mm)	10-23" (250-575mm)	10" (250mm)	0"-10" (0-250mm)
24	600	77665	29-41" (725-1025mm)	16-29" (400-725mm)		
30	750	77666	35-47" (875-1175mm)	22-35" (550-875mm)		
36	900	77667	41-53" (1025-1325mm)	28-41" (700-1025mm)		
42	1050	77668	47-59" (1175-1475mm)	33-47" (825-1175mm)		
48	1200	77669	53-65" (1325-1625mm)	40-53" (1000-1325mm)		
54	1350	77670	59-71" (1475-1775mm)	46-59" (1150-1475mm)		
60	1500	77671	65-77" (1625-1925mm)	52-65" (1300-1625mm)		
72	1800	77672	77-89" (1925-2225mm)	64-77" (1600-1925mm)		

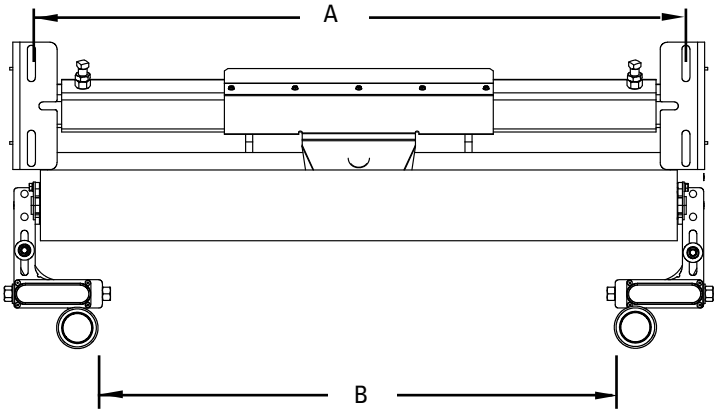

PT Smart Underground Structure

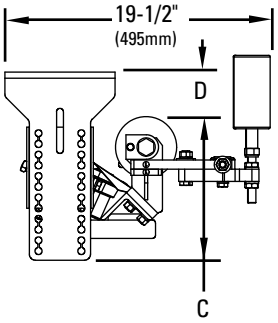

Belt Width in.	Belt Width mm	Item Code	A	B	C	D
30	750	77673	35-47" (875-1175mm)	27-40" (675-1000mm)	10" (250mm)	2-3/4" to 13-1/4" (69mm to 331mm)
36	900	77674	41-53" (1025-1325mm)	33-46" (825-1150mm)		
42	1050	77675	47-59" (1175-1475mm)	39-52" (975-1300mm)		
48	1200	77676	53-65" (1025-1625mm)	45-58" (1125-1450mm)		
54	1350	77677	59-71" (1475-1775mm)	51-64" (1275-1600mm)		
60	1500	77678	65-77" (1625-1925mm)	57-70" (1425-1750mm)		
72	1800	77679	77-89" (1925-2225mm)	69-82" (1725-2050mm)	10-1/2" (262mm)	2-1/4" to 12-3/4" (56mm to 319mm)

Replacement Parts List

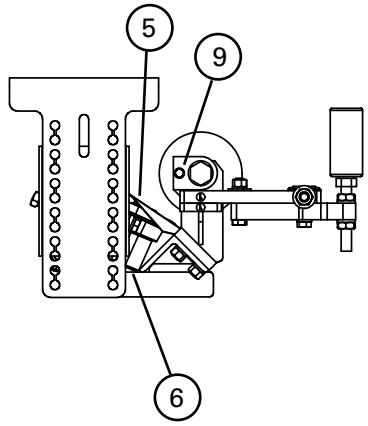

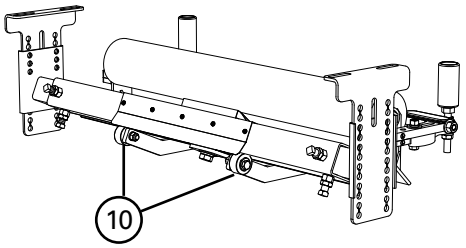

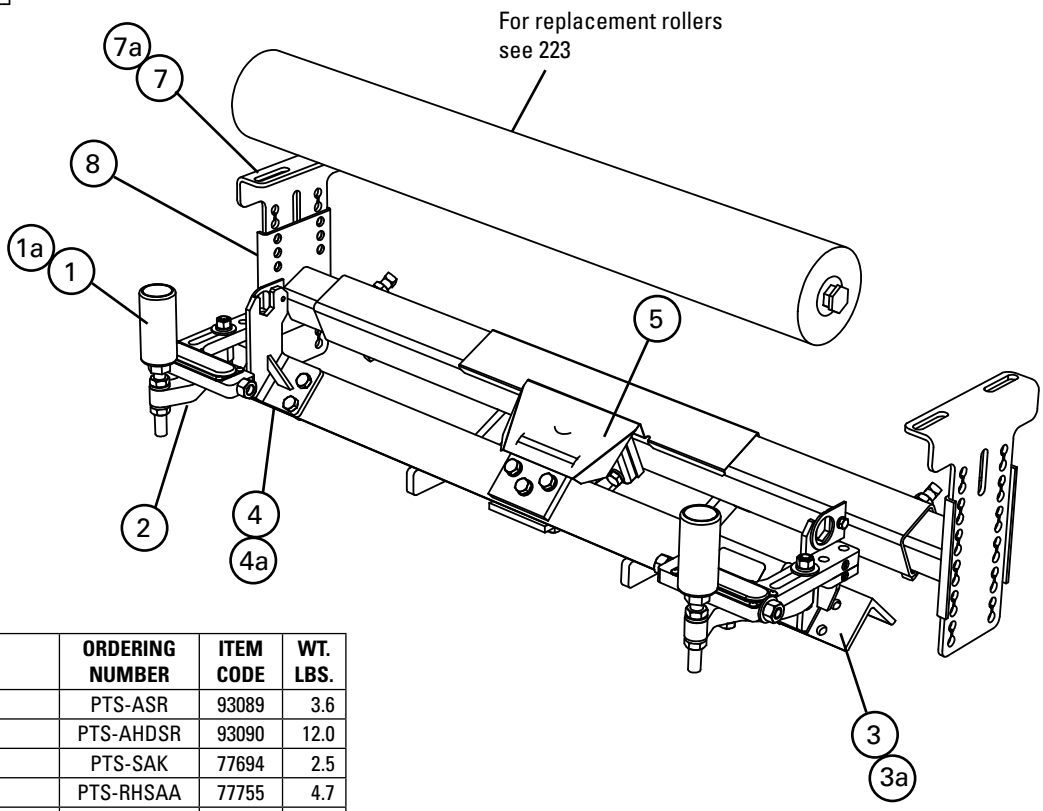

Replacement Parts

REF	DESCRIPTION	ORDERING NUMBER	ITEM CODE	WT. LBS.
1	PTS STD Sensor Roller (2")	PTS-ASR	93089	3.6
1a	PTS HD Sensor Roller (3")	PTS-AHDSR	93090	12.0
2	PTS Sensor Arm Kit (incl. 1 ea.)	PTS-SAK	77694	2.5
3	PTS RH Sensor Adjuster Assy	PTS-RHSAA	77755	4.7
3a	PTS LH Sensor Adjuster Assy	PTS-LHSAA	77756	4.7
4	PTS Idler Bracket Kit (incl. L & R)	PTS-IBK	77696	5.9
4a	PTS HD Idler Bracket Kit (incl. L & R)	PTS-HIBK	77697	6.2
5	PTS Pivot Shield	PTS-PS	77698	1.8
6	PTS Pivot Assy (Axle and housing)	PTS-PA	77699	6.9
7	PTS Mounting Bracket Kit	PTS-MBK	77700	8.8
7a	PTS Mounting Bracket Kit U/G	PTS-MBKUG	77701	11.4
8	PTS Extending Bracket Kit (incl. L & R)	PTS-EBK	77702	12.9
9	Roller Retainer Kit	RBPRET	73163	1.0
10	Delrin Roll Kit (2 kits plus hardware)	PTS-DRK	90100	1.5
-	Wire Mount Kit (not pictured)	PTS-WMK	78767	11.5

*Hardware included
Lead time: 1 working day

Legacy Replacement Sensor Rollers - For PT Smart Units Shipped Prior to Feb. 24, 2021

REF	DESCRIPTION	ORDERING NUMBER	ITEM CODE	WT. LBS.
L1	PTS STD Sensor Roller (2")	PTS-SR	77691	3.6
L1a	PTS HD Sensor Roller (3")	PTS-HDSR	77692	12.0

Product Ordering Information

PT Max™ Adjustable Top Side

VERSION	BELT WIDTH in.	BELT WIDTH mm	ORDERING NUMBER	ITEM CODE	WT. LBS.
Standard	36	900	PTMA36T	90362	355.0
	42	1050	PTMA42T	90363	375.0
	48	1200	PTMA48T	90364	405.0
	54	1350	PTMA54T	90365	425.0
	60	1500	PTMA60T	90366	445.0
Heavy-Duty	54	1350	PTMAHD54T	90377	505.0
	60	1500	PTMAHD60T	90378	530.0
	72	1800	PTMAHD72T	90379	610.0
	84	2100	PTMAHD84T	90380	670.0

PT MAX™ ADJUSTABLE
TOP SIDE BELT TRAINER

PT Max Adjustable Return Side

VERSION	BELT WIDTH in.	BELT WIDTH mm	ORDERING NUMBER	ITEM CODE	WT. LBS.
Standard	36	900	PTMA36R	90367	340.0
	42	1050	PTMA42R	90368	375.0
	48	1200	PTMA48R	90369	395.0
	54	1350	PTMA54R	90370	415.0
	60	1500	PTMA60R	90371	430.0
Heavy-Duty	54	1350	PTMAHD54R	90381	520.0
	60	1500	PTMAHD60R	90382	540.0
	72	1800	PTMAHD72R	90383	615.0
	84	2100	PTMAHD84R	90384	665.0

PT MAX ADJUSTABLE
RETURN SIDE BELT TRAINER

PT Max Adjustable V-Return

VERSION	BELT WIDTH in.	BELT WIDTH mm	ORDERING NUMBER	ITEM CODE	WT. LBS.
Standard	36	900	PTMA36VR	90372	430.0
	42	1050	PTMA42VR	90373	450.0
	48	1200	PTMA48VR	90374	475.0
	54	1350	PTMA54VR	90375	495.0
	60	1500	PTMA60VR	90376	520.0
Heavy-Duty	54	1350	PTMAHD54VR	90385	610.0
	60	1500	PTMAHD60VR	90386	635.0
	72	1800	PTMAHD72VR	90387	725.0
	84	2100	PTMAHD84VR	90388	770.0

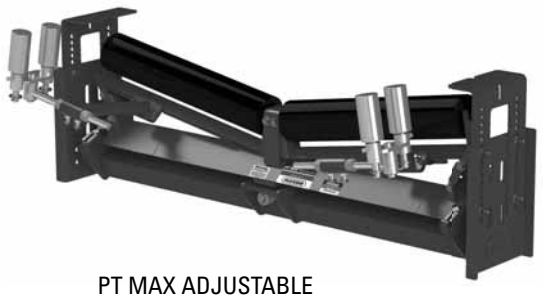

PT MAX ADJUSTABLE
V-RETURN BELT TRAINER

Lead time: 1 working day
Lead time: 15 working days

Product Ordering Information

PT Max™ Top Side

VERSION	BELT WIDTH in.	BELT WIDTH mm	ORDERING NUMBER	ITEM CODE	WT. LBS.
Standard	24	600	PTM24T	75583	280.0
	30	750	PTM30T	74885	295.0
	36	900	PTM36T	74886	310.0
	42	1050	PTM42T	74887	325.0
	48	1200	PTM48T	74888	340.0
	54	1350	PTM54T	74889	355.0
	60	1500	PTM60T	74890	370.0
Heavy-Duty	54	1350	PTMHD54T	74891	390.0
	60	1500	PTMHD60T	74892	410.0
	72	1800	PTMHD72T	74893	430.0
	84	2100	PTMHD84T	74894	450.0
Super-Duty	72	1800	PTMSD72T	74895	828.1
	84	2100	PTMSD84T	74896	876.8
	96	2400	PTMSD96T	74897	925.5
	120	3000	PTMSD120T	74898	1022.9

PT MAX™ TOP SIDE
BELT TRAINER
(Rollers supplied by end user)

PT Max Return Side

VERSION	BELT WIDTH in.	BELT WIDTH mm	ORDERING NUMBER	ITEM CODE	WT. LBS.
Standard	24	600	PTM24R	75584	330.0
	30	750	PTM30R	74899	340.0
	36	900	PTM36R	74900	350.0
	42	1050	PTM42R	74901	370.0
	48	1200	PTM48R	74902	380.0
	54	1350	PTM54R	74903	400.0
	60	1500	PTM60R	74904	420.0
Heavy-Duty	54	1350	PTMHD54R	74905	510.0
	60	1500	PTMHD60R	74906	520.0
	72	1800	PTMHD72R	74907	580.0
	84	2100	PTMHD84R	74908	610.0
Super-Duty	72	1800	PTMSD72R	74909	992.7
	84	2100	PTMSD84R	74910	1051.1
	96	2400	PTMSD96R	74911	1109.5
	120	3000	PTMSD120R	74912	1226.3

PT MAX RETURN SIDE
BELT TRAINER
(Rollers supplied by end user)

PT Max V-Return

VERSION	BELT WIDTH in.	BELT WIDTH mm	ORDERING NUMBER	ITEM CODE	WT. LBS.
Standard	24	600	PTM24VR	79669	310.0
	30	750	PTM30VR	79670	320.0
	36	900	PTM36VR	79671	330.0
	42	1050	PTM42VR	79672	350.0
	48	1200	PTM48VR	79673	360.0
	54	1350	PTM54VR	79674	370.0
	60	1500	PTM60VR	79675	390.0
Heavy-Duty	54	1350	PTMHD54VR	79665	470.0
	60	1500	PTMHD60VR	79666	480.0
	72	1800	PTMHD72VR	79667	560.0
	84	2100	PTMHD84VR	79668	600.0
Super-Duty	72	1800	PTMSD72VR	90051	935.0
	84	2100	PTMSD84VR	90052	990.0
	96	2400	PTMSD96VR	90053	1045.0
	120	3000	PTMSD120VR	90054	1155.0

PT MAX V-RETURN
BELT TRAINER
(Rollers supplied by end user)

All items are made to order.
Lead time: 15 working days (after data sheets are approved)

Lead time: 25 working days (after data sheets are approved)

Product Ordering Information

PT Max™ Top Side

VERSION	BELT WIDTH in.	BELT WIDTH mm	ORDERING NUMBER	ITEM CODE	WT. LBS.
Standard	24	600	PTM24T-S/S	90001	302.4
	30	750	PTM30T-S/S	90002	318.6
	36	900	PTM36T-S/S	90003	334.8
	42	1050	PTM42T-S/S	90004	351.0
	48	1200	PTM48T-S/S	90005	367.2
	54	1350	PTM54T-S/S	90006	383.4
	60	1500	PTM60T-S/S	90007	399.6
Heavy-Duty	54	1350	PTMHD54T-S/S	90008	421.2
	60	1500	PTMHD60T-S/S	90009	442.8
	72	1800	PTMHD72T-S/S	90010	464.4
	84	2100	PTMHD84T-S/S	90011	486.0
Super-Duty	72	1800	PTMSD72T-S/S	90034	894.3
	84	2100	PTMSD84T-S/S	90035	946.9
	96	2400	PTMSD96T-S/S	90036	999.5
	120	3000	PTMSD120T-S/S	90037	1104.8

PT MAX™ TOP SIDE
BELT TRAINER
(Rollers supplied by end user)

PT Max Return Side

VERSION	BELT WIDTH in.	BELT WIDTH mm	ORDERING NUMBER	ITEM CODE	WT. LBS.
Standard	24	600	PTM24R-S/S	90012	356.4
	30	750	PTM30R-S/S	90013	367.2
	36	900	PTM36R-S/S	90014	378.0
	42	1050	PTM42R-S/S	90015	399.6
	48	1200	PTM48R-S/S	90016	410.4
	54	1350	PTM54R-S/S	90017	432.0
	60	1500	PTM60R-S/S	90018	453.6
Heavy-Duty	54	1350	PTMHD54R-S/S	90019	550.8
	60	1500	PTMHD60R-S/S	90020	561.6
	72	1800	PTMHD72R-S/S	90021	626.4
	84	2100	PTMHD84R-S/S	90022	658.8
Super-Duty	72	1800	PTMSD72R-S/S	90038	1072.1
	84	2100	PTMSD84R-S/S	90039	1135.2
	96	2400	PTMSD96R-S/S	90040	1198.3
	120	3000	PTMSD120R-S/S	90041	1324.4

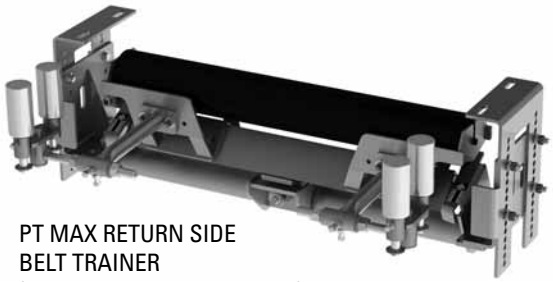

PT MAX RETURN SIDE
BELT TRAINER
(Rollers supplied by end user)

PT Max V-Return

VERSION	BELT WIDTH in.	BELT WIDTH mm	ORDERING NUMBER	ITEM CODE	WT. LBS.
Standard	24	600	PTM24VR-S/S	90023	334.8
	30	750	PTM30VR-S/S	90024	345.6
	36	900	PTM36VR-S/S	90025	356.4
	42	1050	PTM42VR-S/S	90026	378.0
	48	1200	PTM48VR-S/S	90027	388.8
	54	1350	PTM54VR-S/S	90028	399.6
	60	1500	PTM60VR-S/S	90029	421.2
Heavy-Duty	54	1350	PTMHD54VR-S/S	90030	507.6
	60	1500	PTMHD60VR-S/S	90031	518.4
	72	1800	PTMHD72VR-S/S	90032	604.8
	84	2100	PTMHD84VR-S/S	90033	648.0
Super-Duty	72	1800	PTMSD72VR-S/S	90042	1009.8
	84	2100	PTMSD84VR-S/S	90043	1069.2
	96	2400	PTMSD96VR-S/S	90044	1128.6
	120	3000	PTMSD120VR-S/S	90045	1247.4

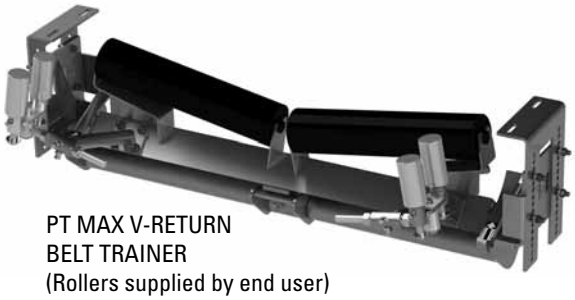

PT MAX V-RETURN
BELT TRAINER
(Rollers supplied by end user)

All items are made to order.
Lead time: 25 working days (after data sheets are approved)

Specifications & Guidelines

Top of Roller to Bottom of PT Max™ Minimum Clearance Needed

ROLL DIAMETER		TOPSIDE						RETURN SIDE						V-RETURN					
		Standard		Heavy-Duty		Super-Duty		Standard		Heavy-Duty		Super-Duty		Standard		Heavy-Duty		Super-Duty	
in.	mm	in.	mm	in.	mm	in.	mm	in.	mm	in.	mm	in.	mm	in.	mm	in.	mm	in.	mm
5	127	16	406	17	432	22.25	570	17	432	18	457	22.75	580	16	406	17	432	22.25	570
6	152	17	432	18	457	23.25	590	18	457	19	483	23.75	600	17	432	18	457	23.25	590
7	178	18	457	19	483	24.25	620	19	483	20	508	24.75	630	18	457	19	483	24.25	620

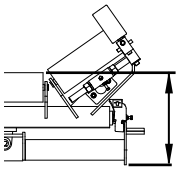
Topside Clearance

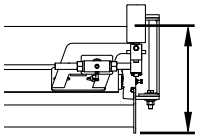
Return Side Clearance

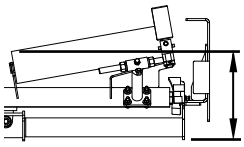
V-Return Clearance

Replacement Parts List

PT Max™ Adjustable Belt Trainer

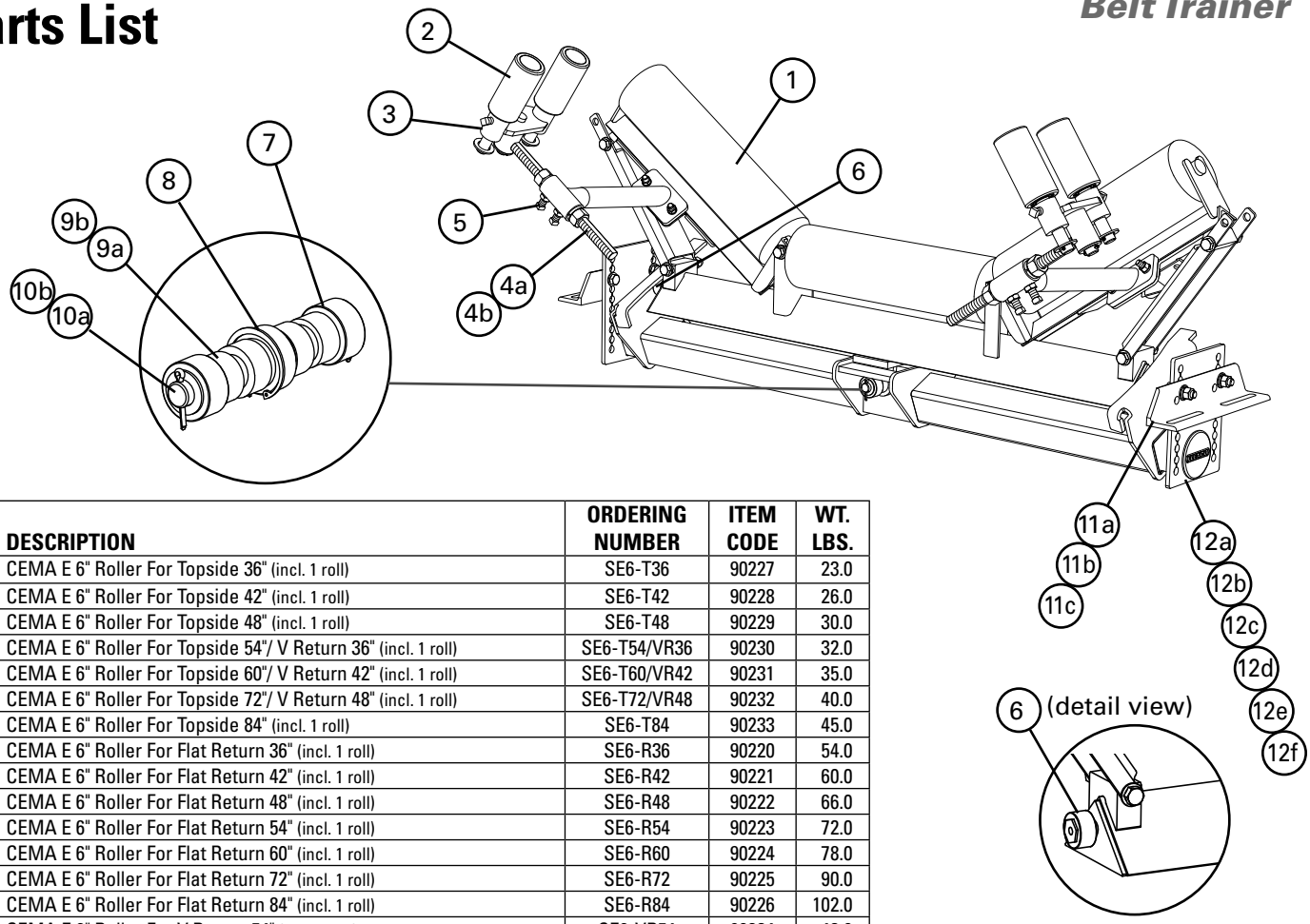

REF	DESCRIPTION	ORDERING NUMBER	ITEM CODE	WT. LBS.
1	CEMA E 6" Roller For Topside 36" (incl. 1 roll)	SE6-T36	90227	23.0
	CEMA E 6" Roller For Topside 42" (incl. 1 roll)	SE6-T42	90228	26.0
	CEMA E 6" Roller For Topside 48" (incl. 1 roll)	SE6-T48	90229	30.0
	CEMA E 6" Roller For Topside 54"/ V Return 36" (incl. 1 roll)	SE6-T54/VR36	90230	32.0
	CEMA E 6" Roller For Topside 60"/ V Return 42" (incl. 1 roll)	SE6-T60/VR42	90231	35.0
	CEMA E 6" Roller For Topside 72"/ V Return 48" (incl. 1 roll)	SE6-T72/VR48	90232	40.0
	CEMA E 6" Roller For Topside 84" (incl. 1 roll)	SE6-T84	90233	45.0
	CEMA E 6" Roller For Flat Return 36" (incl. 1 roll)	SE6-R36	90220	54.0
	CEMA E 6" Roller For Flat Return 42" (incl. 1 roll)	SE6-R42	90221	60.0
	CEMA E 6" Roller For Flat Return 48" (incl. 1 roll)	SE6-R48	90222	66.0
	CEMA E 6" Roller For Flat Return 54" (incl. 1 roll)	SE6-R54	90223	72.0
	CEMA E 6" Roller For Flat Return 60" (incl. 1 roll)	SE6-R60	90224	78.0
	CEMA E 6" Roller For Flat Return 72" (incl. 1 roll)	SE6-R72	90225	90.0
	CEMA E 6" Roller For Flat Return 84" (incl. 1 roll)	SE6-R84	90226	102.0
	CEMA E 6" Roller For V Return 54" (incl. 1 roll)	SE6-VR54	90234	43.0
	CEMA E 6" Roller For V Return 60" (incl. 1 roll)	SE6-VR60	90235	47.0
	CEMA E 6" Roller For V Return 72" (incl. 1 roll)	SE6-VR72	90236	54.0
	CEMA E 6" Roller For V Return 84" (incl. 1 roll)	SE6-VR84	90319	57.0
2	Sensor Roller 2.0* (3" solid roller)(1 ea.)	MSR2	79378	7.0
3	Swivel Mount Kit 2.0*	PMSMK2	79380	5.5
4a	PT Max Adjusting Arm Kit	PTMAAK	90194	6.0
4b	PT Max Adjusting Arm Kit Heavy Duty	PTMAAKHD	90195	9.0
5	Frame Arm Screw Kit (incl. 4 screws and 4 jam nuts)	PTMAFASK	90196	1.2
6	Outer Roller Kit (incl. 2 rollers, roller thimbles, and bolts, nuts, and washers)	PTMAORK	90197	1.0
7	Center Roller Kit (incl. 2 rollers, 2 washers, and 2 cotter pins)	MCRK	74923	1.2
8	Center Bearing	MCB	74925	1.7
9a	Center Shaft Spacer Kit (incl. 2 spacers)	MCSK	74927	0.3
9b	Center Shaft Spacer Kit Heavy Duty (incl. 2 spacers)	MCSKHD	74928	0.5
10a	Center Shaft	MCS	74930	4.0
10b	Center Shaft Heavy Duty	MCSHD	74931	13.0
11a	Frame Mount Kit Topside	PTMAFMKT	90185	14.6
11b	Frame Mount Kit Flat/V Return	PTMAFMKR	90186	42.0
11c	Frame Mount Kit Flat/V Return Heavy Duty	PTMAFMKHDR	90187	49.4
12a	Extender Kit Topside	PTMAEKT	90188	33.9
12b	Extender Kit Topside Heavy Duty	PTMAEKHDT	90191	49.9
12c	Extender Kit Flat Return	PTMAEKR	90189	57.1
12d	Extender Kit Flat Return Heavy Duty	PTMAEKHDR	90192	86.4
12e	Extender Kit V Return	PTMAEKVR	90190	76.0
12f	Extender Kit V Return Heavy Duty	PTMAEKHDVR	90193	112.1
-	Center Bearing Kit (incl. 1 ea. Items 7, 8, 9a, and 10a)	MCBK	76025	8.0
-	Center Bearing Kit Heavy Duty (incl. 1 ea. Items 7, 8, 9b, and 10b)	MCBKHD	76026	17.0

*Hardware included
Lead time: 1 working day

Replacement Parts List

PT Max™
Belt Trainer (Mild Steel)

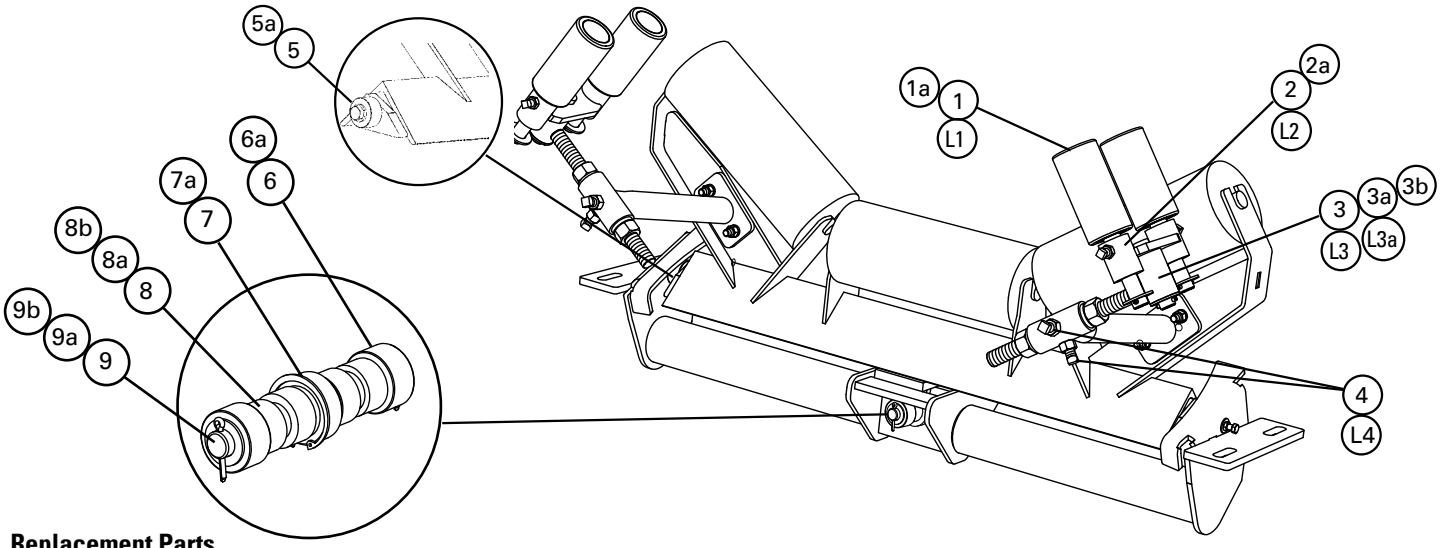

Replacement Parts

REF	DESCRIPTION	BELT WIDTH in.	BELT WIDTH mm	ORDERING NUMBER	ITEM CODE	WT. LBS.
1	Sensor Roller 2.0* (3" solid roller) (1 ea.)	30-84	750-2100	MSR2	79378	7.0
1a	Sensor Roller Super Duty* (1 ea.)	72-120	1800-3000	MSRSD	74915	9.9
2	Swivel Mount Kit 2.0*	30-84	750-2100	PMSMK2	79380	5.5
2a	Swivel Mount Kit Super Duty*	72-120	1800-3000	PMSMKSD	74917	7.5
3	Adjusting Arm Kit 2.0*	30-60	750-1500	MAK2	79381	7.9
3a	Adjusting Arm Kit Heavy Duty 2.0*	54-84	1350-2100	MAKHD2	79382	14.7
3b	Adjusting Arm Kit Super Duty*	72-120	1800-3000	MAKSD	74920	21.0
4	Frame Arm Set Screw Kit HD (incl. 2 set screws and 2 jam nuts)	30-120	750-3000	MFASKHD	79571	0.8
5	Outer Roller Kit* (incl. 2 rollers, roller thimbles and bolts, nuts and washers)	30-84	750-2100	MORK	74921	2.6
5a	Outer Roller Kit Super Duty* (incl. 2 rollers, roller thimbles and bolts, nuts and washers)	72-120	1800-3000	MORKSD	74922	4.0
6	Center Roller Kit* (incl. 2 rollers, 2 washers, and 2 cotter pins)	30-84	750-2100	MCRK	74923	1.2
6a	Center Roller Kit Super Duty* (incl. 2 rollers, 2 washers, and 2 cotter pins)	72-120	1800-3000	MCRKSD	74924	1.8
7	Center Bearing*	30-84	750-2100	MCB	74925	1.7
7a	Center Bearing Super Duty*	72-120	1800-3000	MCBSD	74926	3.0
8	Center Shaft Spacer Kit (incl. 2 spacers)	30-60	750-1500	MCSK	74927	0.3
8a	Center Shaft Spacer Kit Heavy Duty (incl. 2 spacers)	54-84	1350-2100	MCSKHD	74928	0.5
8b	Center Shaft Spacer Kit Super Duty (incl. 2 spacers)	72-120	1800-3000	MCSKSD	74929	2.4
9	Center Shaft	30-60	750-1500	MCS	74930	4.0
9a	Center Shaft Heavy Duty	54-84	1350-2100	MCSHD	74931	13.0
9b	Center Shaft Super Duty	72-120	1800-3000	MCSSD	74932	14.5
-	Center Bearing Kit (incl. 1 ea. items 6, 7, 8, 9)	30-60	750-1500	MCBK	76025	8.0
-	Center Bearing Kit Heavy Duty (incl. 1 ea. items 6, 7, 8a, 9a)	54-84	1350-2100	MCBKHD	76026	17.0
-	Center Bearing Kit Super Duty (incl. 1 ea. items 6a, 7a, 8b, 9b)	72-120	1800-3000	MCBKSD	76027	19.0

For PT Max Units Shipped after March 17, 2014 ONLY. See below for legacy replacement parts.

*Hardware included
Lead time: 1 working day

Shaded items are made to order.
Lead time: 15 working days

Note: All replacement parts offered are common to all three PT Max models: Top Side, Return Side, and V-Return.

Legacy Replacement Parts - For PT Max Units Shipped Prior to March 17, 2014

REF	DESCRIPTION	BELT WIDTH in.	BELT WIDTH mm	ORDERING NUMBER	ITEM CODE	WT. LBS.
L1	Sensor Roller* (3" solid roller) (1 ea.)	30-84	750-2100	MSR	74914	7.0
L2	Swivel Mount Kit*	30-84	750-2100	PMSMK	74916	5.5
L3	Adjusting Arm Kit*	30-60	750-1500	MAK	74918	7.9
L3a	HD Adjusting Arm Kit*	54-84	1350-2100	MAKHD	74919	14.7
L4	Frame Arm Set Screw Kit (incl. 2 set screws and 2 jam nuts)	30-120	750-3000	MFASK	75531	0.8

*Hardware included
Lead time: 1 working day

Replacement Parts List

Stainless Steel PT Max™ Belt Trainer

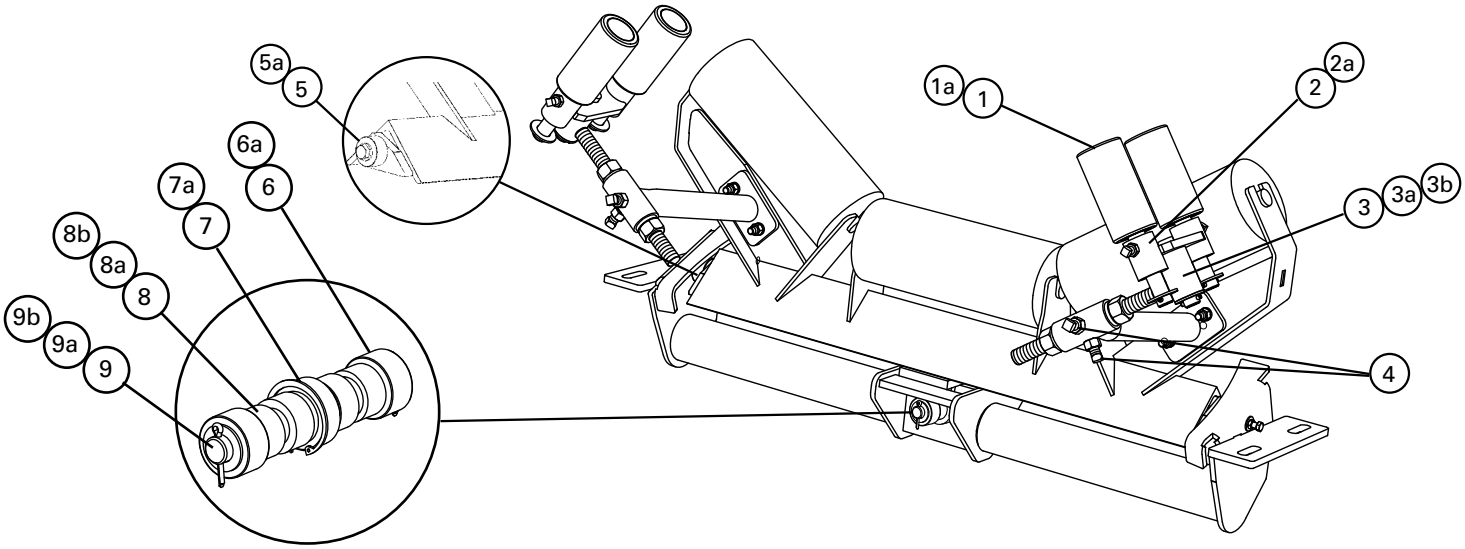

Replacement Parts

REF	DESCRIPTION	BELT WIDTH in.	BELT WIDTH mm	ORDERING NUMBER	ITEM CODE	WT. LBS.
1	Sensor Roller 2.0* (3" solid roller) (1 ea.)	30-84	750-2100	MSR2-S/S	90046	7.6
1a	Sensor Roller Super Duty	72-120	1800-3000	MSRSD-S/S	90055	10.7
2	Swivel Mount Kit 2.0*	30-84	750-2100	PMSMK2-S/S	90047	5.9
2a	Swivel Mount Kit Super Duty*	72-120	1800-3000	PMSMKSD-S/S	90056	8.1
3	Adjusting Arm Kit 2.0*	30-60	750-1500	MAK2-S/S	90048	8.5
3a	Adjusting Arm Kit Heavy Duty 2.0*	54-84	1350-2100	MAKHD2-S/S	90049	15.9
3b	Adjusting Arm Kit Super Duty*	72-120	1800-3000	MAKSD-S/S	90057	22.7
4	Frame Arm Set Screw Kit HD (incl. 2 set screws and 2 jam nuts)	30-120	750-3000	MFASKHD-S/S	90050	0.9
5	Outer Roller Kit* (incl. 2 rollers, roller thimbles and bolts, nuts and washers)	30-84	750-2100	MORK	74921	2.6
5a	Outer Roller Kit Super Duty* (incl. 2 rollers, roller thimbles and bolts, nuts and washers)	72-120	1800-3000	MORKSD	74922	4.0
6	Center Roller Kit* (incl. 2 rollers, 2 washers, and 2 cotter pins)	30-84	750-2100	MCRK	74923	1.2
6a	Center Roller Kit Super Duty* (incl. 2 rollers, 2 washers, and 2 cotter pins)	72-120	1800-3000	MCRKSD	74924	1.8
7	Center Bearing*	30-84	750-2100	MCB	74925	1.7
7a	Center Bearing Super Duty*	72-120	1800-3000	MCBSD	74926	3.0
8	Center Shaft Spacer Kit (incl. 2 spacers)	30-60	750-1500	MCSK	74927	0.3
8a	Center Shaft Spacer Kit Heavy Duty (incl. 2 spacers)	54-84	1350-2100	MCSKHD	74928	0.5
8b	Center Shaft Spacer Kit Super Duty (incl. 2 spacers)	72-120	1800-3000	MCSKSD	74929	2.4
9	Center Shaft	30-60	750-1500	MCS	74930	4.0
9a	Center Shaft Heavy Duty	54-84	1350-2100	MCSHD	74931	13.0
9b	Center Shaft Super Duty	72-120	1800-3000	MCSSD	74932	14.5
-	Center Bearing Kit (incl. 1 ea. items 6, 7, 8, 9)	30-60	750-1500	MCBK	76025	8.0
-	Center Bearing Kit Heavy Duty (incl. 1 ea. items 6, 7, 8a, 9a)	54-84	1350-2100	MCBKHD	76026	17.0
-	Center Bearing Kit Super Duty (incl. 1 ea. items 6a, 7a, 8b, 9b)	72-120	1800-3000	MCBKSD	76027	19.0

*Hardware included
Lead time: 1 working day

Shaded items are made to order.
Lead time: 15 working days

Note: All replacement parts offered are common to all three PT Max models: Top Side, Return Side, and V-Return.

Product Ordering Information

Enclosed Skirting Base Unit

Base unit configuration options: belt width, length, no cover or cover, standard or tangential seal. One Leg Kit included with each Base Unit.

Product Notes:

- Maximum span between support legs is 96" (or 8 ft) and they are to be attached to the conveyor stringer or truss
  - For each run of Enclosed Skirting one additional Leg Kit is required to complete the installation. See Leg Kits on the Replacement Parts page.
- Skirting solutions do not include required skirt rubber; purchase from local Flexco distribution
- Straight skirt wall and tangential skirt wall available for different skirt rubber sealing options
- Product is built and sold to CEMA standards
- Skirt board liners made with AR400 abrasive resistant plate steel

Standard Base Unit

BELT WIDTH		BASE UNIT LENGTH		STANDARD, NO COVER			STANDARD, COVERED		
in.	mm	ft.	mm	ORDERING NUMBER	ITEM CODE	WT. LBS.	ORDERING NUMBER	ITEM CODE	WT. LBS.
24	600	4	1200	ES24-4-SN	91653	176.6	ES24-4-SF	91664	218.4
30	750	4	1200	ES30-4-SN	91654	177.9	ES30-4-SF	91665	227.4
36	900	4	1200	ES36-4-SN	91655	179.3	ES36-4-SF	91666	236.5
42	1050	4	1200	ES42-4-SN	91656	181.9	ES42-4-SF	91667	247.2
48	1200	4	1200	ES48-4-SN	91657	183.3	ES48-4-SF	91668	256.6
54	1350	4	1200	ES54-4-SN	91658	184.6	ES54-4-SF	91669	265.6
60	1500	4	1200	ES60-4-SN	91659	187.3	ES60-4-SF	91670	276.1
66	1650	4	1200	ES66-4-SN	91660	188.6	ES66-4-SF	91671	285.1
72	1800	4	1200	ES72-4-SN	91661	189.9	ES72-4-SF	91672	294.5
84	2100	4	1200	ES84-4-SN	91662	193.9	ES84-4-SF	91673	314.0
96	2400	4	1200	ES96-4-SN	91663	197.9	ES96-4-SF	91674	333.7
24	600	8	2400	ES24-8-SN	91689	318.3	ES24-8-SF	91700	401.8
30	750	8	2400	ES30-8-SN	91690	319.6	ES30-8-SF	91701	418.6
36	900	8	2400	ES36-8-SN	91691	320.9	ES36-8-SF	91702	435.4
42	1050	8	2400	ES42-8-SN	91692	323.6	ES42-8-SF	91703	454.2
48	1200	8	2400	ES48-8-SN	91693	325.0	ES48-8-SF	91704	471.5
54	1350	8	2400	ES54-8-SN	91694	326.3	ES54-8-SF	91705	488.4
60	1500	8	2400	ES60-8-SN	91695	329.0	ES60-8-SF	91706	506.5
66	1650	8	2400	ES66-8-SN	91696	330.3	ES66-8-SF	91707	523.3
72	1800	8	2400	ES72-8-SN	91697	331.6	ES72-8-SF	91708	540.7
84	2100	8	2400	ES84-8-SN	91698	335.6	ES84-8-SF	91709	575.7
96	2400	8	2400	ES96-8-SN	91699	339.6	ES96-8-SF	91710	611.2

Tangential Base Unit

BELT WIDTH		BASE UNIT LENGTH		TANGENTIAL, NO COVER			TANGENTIAL, COVERED		
in.	mm	ft.	mm	ORDERING NUMBER	ITEM CODE	WT. LBS.	ORDERING NUMBER	ITEM CODE	WT. LBS.
24	600	4	1200						
30	750	4	1200						
36	900	4	1200						
42	1050	4	1200						
48	1200	4	1200	ES48-4-TN	91675	225.5	ES48-4-TF	91682	298.8
54	1350	4	1200	ES54-4-TN	91676	226.8	ES54-4-TF	91683	307.9
60	1500	4	1200	ES60-4-TN	91677	229.5	ES60-4-TF	91684	318.3
66	1650	4	1200	ES66-4-TN	91678	230.8	ES66-4-TF	91685	327.4
72	1800	4	1200	ES72-4-TN	91679	232.2	ES72-4-TF	91686	336.7
84	2100	4	1200	ES84-4-TN	91680	236.2	ES84-4-TF	91687	356.2
96	2400	4	1200	ES96-4-TN	91681	240.2	ES96-4-TF	91688	376.0
24	600	8	2400						
30	750	8	2400						
36	900	8	2400						
42	1050	8	2400						
48	1200	8	2400	ES48-8-TN	91711	409.5	ES48-8-TF	91718	556.0
54	1350	8	2400	ES54-8-TN	91712	410.8	ES54-8-TF	91719	572.9
60	1500	8	2400	ES60-8-TN	91713	413.5	ES60-8-TF	91720	591.0
66	1650	8	2400	ES66-8-TN	91714	414.8	ES66-8-TF	91721	607.8
72	1800	8	2400	ES72-8-TN	91715	416.1	ES72-8-TF	91722	625.2
84	2100	8	2400	ES84-8-TN	91716	420.1	ES84-8-TF	91723	660.2
96	2400	8	2400	ES96-8-TN	91717	424.1	ES96-8-TF	91724	695.7

Product Ordering Information

Rear Seal

Used to enclose the rear of system while providing access into the system.

BELT WIDTH		ORDERING NUMBER	ITEM CODE	WT. LBS.
in.	mm			
24	600	RS-24	91725	23.7
30	750	RS-30	91726	28.3
36	900	RS-36	91727	33.0
42	1050	RS-42	91728	38.1
48	1200	RS-48	91729	43.4
54	1350	RS-54	91730	48.6
60	1500	RS-60	91731	54.0
66	1650	RS-66	91732	59.3
72	1800	RS-72	91733	65.0
84	2100	RS-84	91734	78.1
96	2400	RS-96	91735	92.3

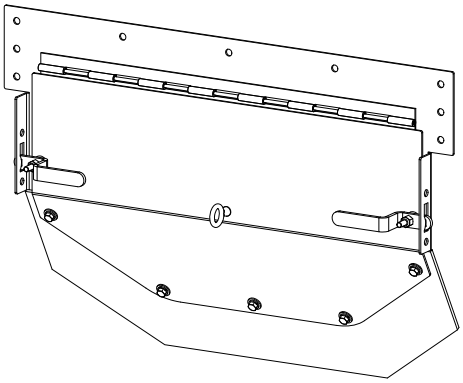

Dust Curtain

Can be located every two feet

BELT WIDTH		ORDERING NUMBER	ITEM CODE	WT. LBS.
in.	mm			
24	600	DC-24	91736	5.5
30	750	DC-30	91737	6.4
36	900	DC-36	91738	7.2
42	1050	DC-42	91739	8.0
48	1200	DC-48	91740	9.0
54	1350	DC-54	91741	9.6
60	1500	DC-60	91742	10.2
66	1650	DC-66	91743	11.0
72	1800	DC-72	91744	11.5
84	2100	DC-84	91745	12.7
96	2400	DC-96	91746	13.3

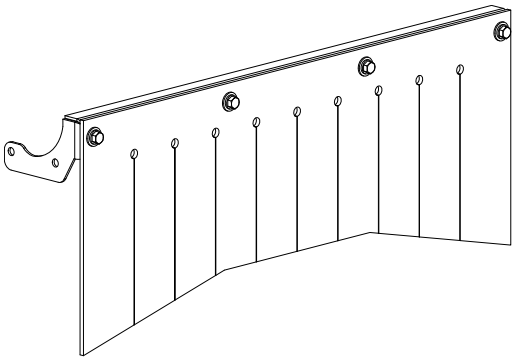

Spanners

Can be located every two feet

SPANNER WIDTH		ORDERING NUMBER	ITEM CODE	WT. LBS.
in.	mm			
24	600	SP-24	91747	5.5
30	750	SP-48	91748	10.9
36	900	SP-72	91749	16.2
42	1050	SP-96	91750	21.5

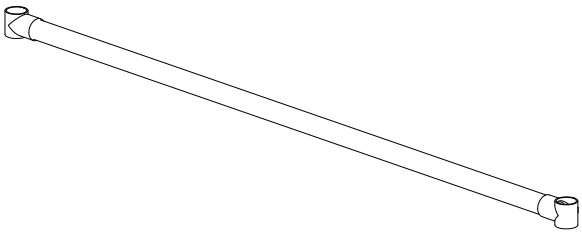

Product Notes:

- Add-on items attach to base unit to provide custom arrangement for your application

4' (1.2 M) Base Unit

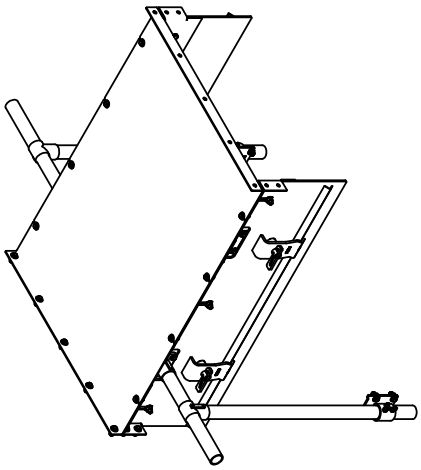

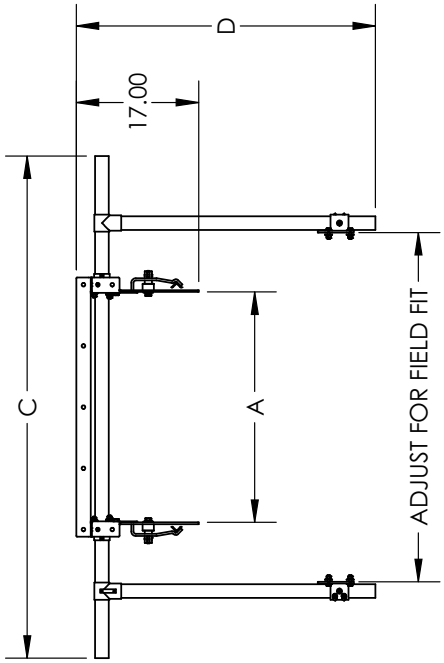

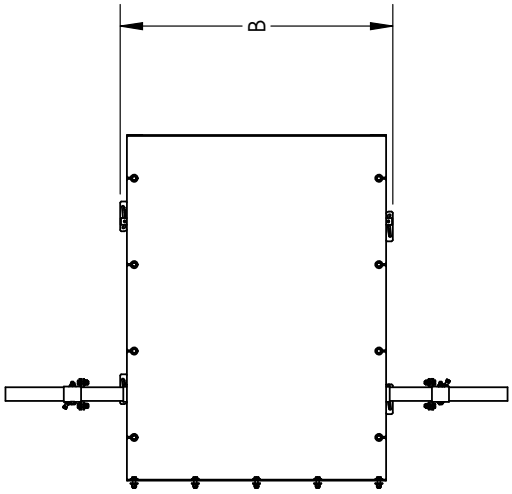

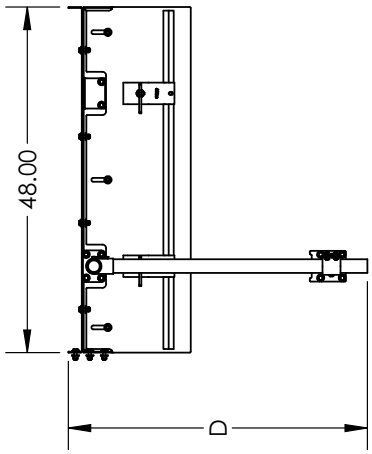

BELT WIDTH (in)	A (in)	B (in)	C (in)	D (in)
24	16	21.9	45.8	38.5
30	20	25.9	51.8	38.5
36	24	29.9	57.8	38.5
42	28	33.9	63.8	41.5
48	32	37.9	69.8	41.5
54	36	41.9	75.8	41.5
60	40	45.9	81.8	44.5
66	44	49.9	87.8	44.5
72	48	53.9	93.8	44.5
84	56	57.9	105.8	47.5
96	64	61.9	117.8	50.5

8' (2.4 M) Base Unit

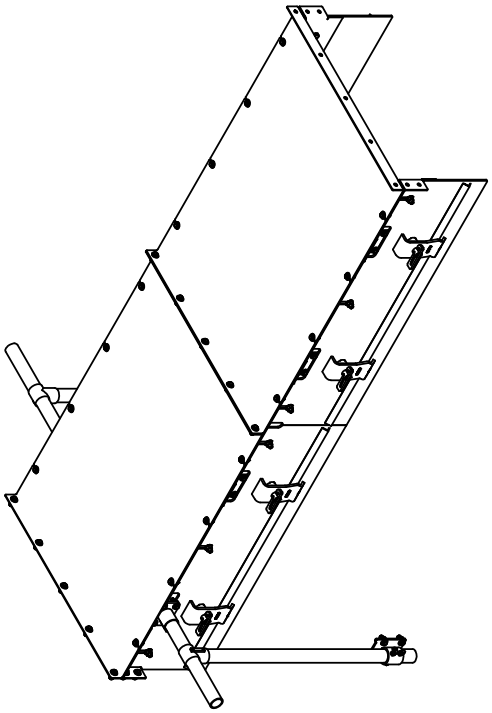

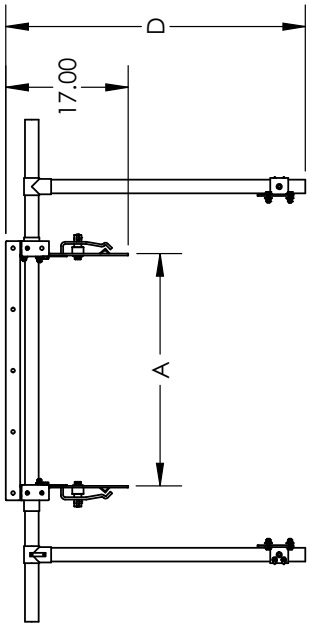

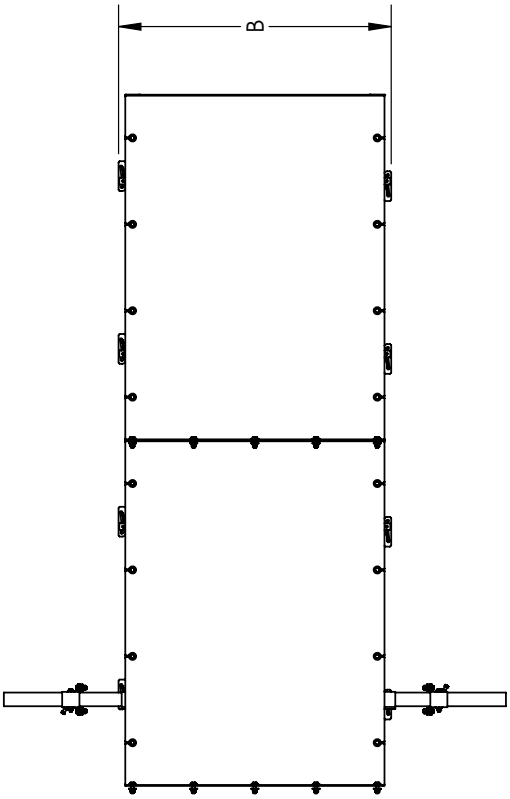

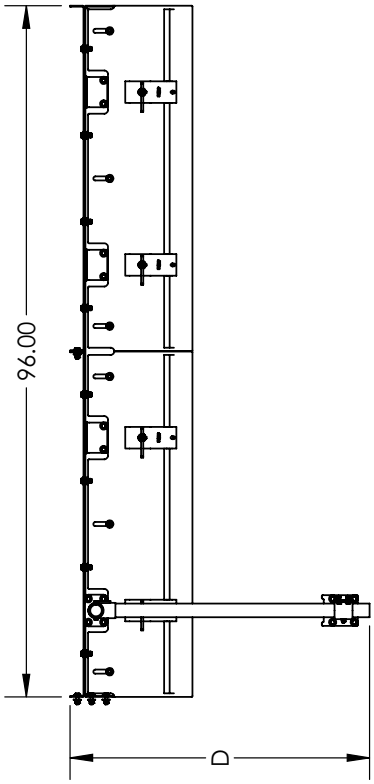

BELT WIDTH (in)	A (in)	B (in)	C (in)	D (in)
24	16	21.9	45.8	38.5
30	20	25.9	51.8	38.5
36	24	29.9	57.8	38.5
42	28	33.9	63.8	41.5
48	32	37.9	69.8	41.5
54	36	41.9	75.8	41.5
60	40	45.9	81.8	44.5
66	44	49.9	87.8	44.5
72	48	53.9	93.8	44.5
84	56	57.9	105.8	47.5
96	64	61.9	117.8	50.5

Replacement Parts

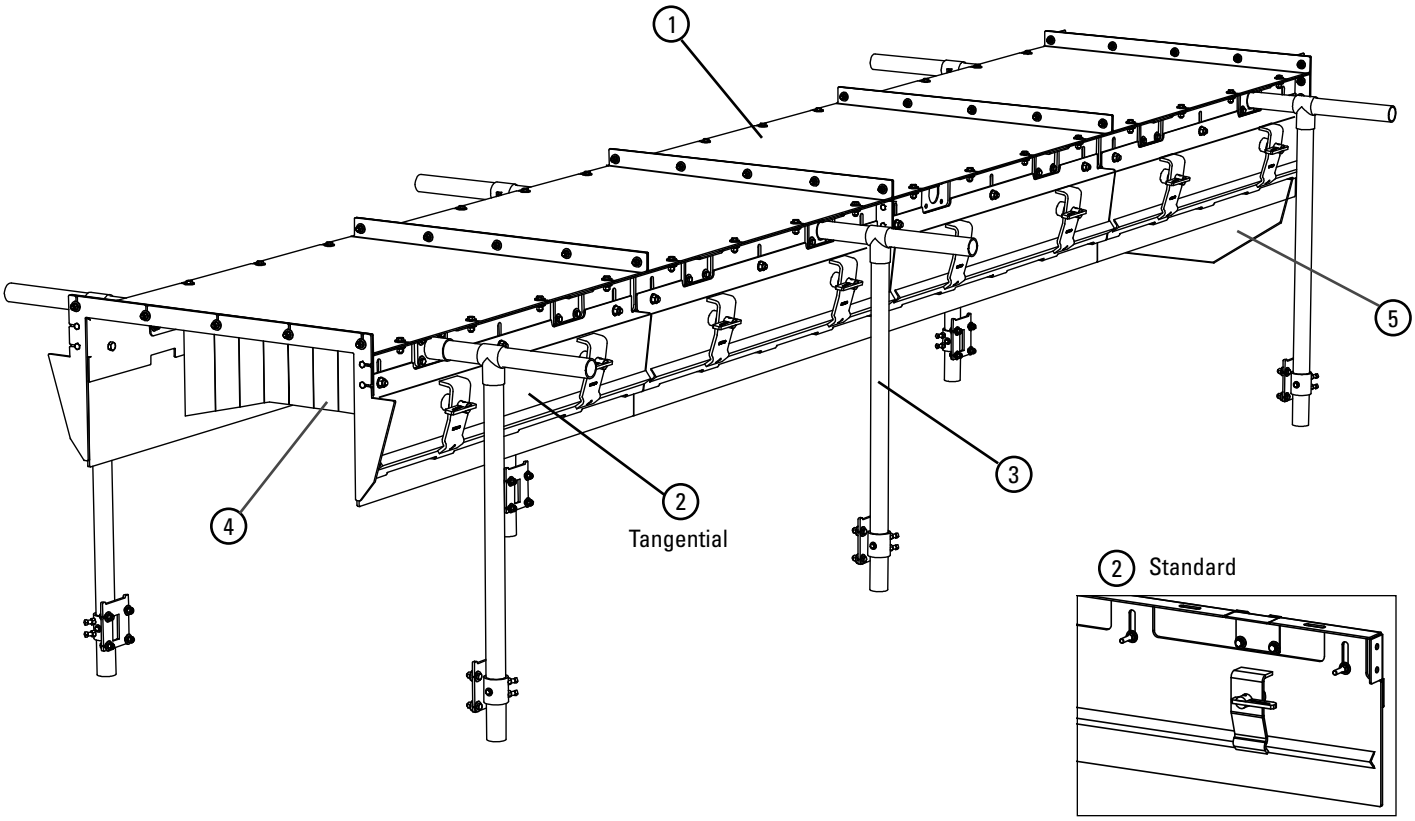

Replacement Parts

REF	DESCRIPTION	ORDERING NUMBER	ITEM CODE	WT. LBS.
1	24" (600 mm) Cover	SKC-24	91751	41.8
	30" (750 mm) Cover	SKC-30	91752	49.5
	36" (900 mm) Cover	SKC-36	91753	57.3
	42" (1050 mm) Cover	SKC-42	91754	65.3
	48" (1200 mm) Cover	SKC-48	91755	73.3
	54" (1350 mm) Cover	SKC-54	91756	81.0
	60" (1500 mm) Cover	SKC-60	91757	88.8
	66" (1650 mm) Cover	SKC-66	91758	96.5
	72" (1800 mm) Cover	SKC-72	91759	104.6
	84" (2100 mm) Cover	SKC-84	91760	120.0
	96" (2400 mm) Cover	SKC-96	91761	135.8
2	Standard AR400 Wear Plate*	SL-48	91841	45.4
	Tangential AR400 Wear Plate*	TL-48	91842	45.6
3	24" (600 mm) Leg Kit**	LA-24	91762	36.0
	30" (750 mm) Leg Kit**	LA-30	91763	37.4
	36" (900 mm) Leg Kit**	LA-36	91764	38.7
	42" (1050 mm) Leg Kit**	LA-42	91765	41.4
	48" (1200 mm) Leg Kit**	LA-48	91766	42.7
	54" (1350 mm) Leg Kit**	LA-54	91835	44.0
	60" (1500 mm) Leg Kit**	LA-60	91836	46.7
	66" (1650 mm) Leg Kit**	LA-66	91837	48.0
	72" (1800 mm) Leg Kit**	LA-72	91838	49.4
	84" (2100 mm) Leg Kit**	LA-84	91839	53.4
	96" (2400 mm) Leg Kit**	LA-96	91840	57.4

Hardware Included
*Item is single plate; two plates are required for every 4' (1200 mm) base unit and four plates are required for every 8' (2400 mm) base unit
**Kit includes 2 vertical legs, 1 crossmember, joints/mounts, and hardware
Lead time: 4 to 6 weeks

REF	DESCRIPTION	ORDERING NUMBER	ITEM CODE	WT. LBS.
4	24" (600 mm) Dust Curtain Replacement Rubber	DCRR-24	92159	4.1
	30" (750 mm) Dust Curtain Replacement Rubber	DCRR-30	92160	4.8
	36" (900 mm) Dust Curtain Replacement Rubber	DCRR-36	92161	5.4
	42" (1050 mm) Dust Curtain Replacement Rubber	DCRR-42	92162	6.0
	48" (1200 mm) Dust Curtain Replacement Rubber	DCRR-48	92163	6.8
	54" (1350 mm) Dust Curtain Replacement Rubber	DCRR-54	92164	7.2
	60" (1500 mm) Dust Curtain Replacement Rubber	DCRR-60	92165	7.7
	66" (1650 mm) Dust Curtain Replacement Rubber	DCRR-66	92166	8.3
	72" (1800 mm) Dust Curtain Replacement Rubber	DCRR-72	92167	8.6
	84" (2100 mm) Dust Curtain Replacement Rubber	DCRR-84	92168	8.5
	96" (2400 mm) Dust Curtain Replacement Rubber	DCRR-96	92169	10.0
5	24" (600 mm) Rear Seal Replacement Rubber	RSRR-24	92170	3.6
	30" (750 mm) Rear Seal Replacement Rubber	RSRR-30	92171	4.2
	36" (900 mm) Rear Seal Replacement Rubber	RSRR-36	92172	5.0
	42" (1050 mm) Rear Seal Replacement Rubber	RSRR-42	92173	5.7
	48" (1200 mm) Rear Seal Replacement Rubber	RSRR-48	92174	6.5
	54" (1350 mm) Rear Seal Replacement Rubber	RSRR-54	92175	7.3
	60" (1500 mm) Rear Seal Replacement Rubber	RSRR-60	92176	8.1
	66" (1650 mm) Rear Seal Replacement Rubber	RSRR-66	92177	8.9
	72" (1800 mm) Rear Seal Replacement Rubber	RSRR-72	92178	9.8
	84" (2100 mm) Rear Seal Replacement Rubber	RSRR-84	92179	11.7
	96" (2400 mm) Rear Seal Replacement Rubber	RSRR-96	92180	13.8

Product Ordering Information

Standard Urethane Skirting with 35° Chamfer - 25' (7.6 m)

Height		Thickness		Length		ORDERING NUMBER	ITEM CODE	WT. LBS.
in	mm	in	mm	ft	m			
4	100	3/8	10	25	7.6	SKPU-4X3/8X25	91288	21.2
4	100	1/2	12	25	7.6	SKPU-4X1/2X25	91289	28.2
4	100	5/8	16	25	7.6	SKPU-4X5/8X25	91290	35.3
4	100	3/4	19	25	7.6	SKPU-4X3/4X25	91291	42.3
4	100	1	25	25	7.6	SKPU-4X1X25	91292	56.4
6	150	3/8	10	25	7.6	SKPU-6X3/8X25	91298	31.7
6	150	1/2	12	25	7.6	SKPU-6X1/2X25	90283	42.3
6	150	5/8	16	25	7.6	SKPU-6X5/8X25	91299	52.9
6	150	3/4	19	25	7.6	SKPU-6X3/4X25	90284	63.5
6	150	1	25	25	7.6	SKPU-6X1X25	91300	84.6
8	200	3/8	10	25	7.6	SKPU-8X3/8X25	91304	42.3
8	200	1/2	12	25	7.6	SKPU-8X1/2X25	90285	56.4
8	200	5/8	16	25	7.6	SKPU-8X5/8X25	91305	70.5
8	200	3/4	19	25	7.6	SKPU-8X3/4X25	90286	84.6
8	200	1	25	25	7.6	SKPU-8X1X25	91306	112.8
10	250	3/8	10	25	7.6	SKPU-10X3/8X25	91310	52.9
10	250	1/2	12	25	7.6	SKPU-10X1/2X25	91311	70.5
10	250	5/8	16	25	7.6	SKPU-10X5/8X25	91312	88.1
10	250	3/4	19	25	7.6	SKPU-10X3/4X25	91313	105.8
10	250	1	25	25	7.6	SKPU-10X1X25	91314	141.0
12	300	3/8	10	25	7.6	SKPU-12X3/8X25	91320	63.5
12	300	1/2	12	25	7.6	SKPU-12X1/2X25	91321	84.6
12	300	5/8	16	25	7.6	SKPU-12X5/8X25	91322	105.8
12	300	3/4	19	25	7.6	SKPU-12X3/4X25	91323	126.9
12	300	1	25	25	7.6	SKPU-12X1X25	91324	169.2

Price Per Inch for reference only; skirting is available standard in 25' (15.2M) lengths.
Shaded items are made to order; 1-2 week lead time

Standard Urethane Skirting with 35° Chamfer - 50' (15.2 m)

Height		Thickness		Length		ORDERING NUMBER	ITEM CODE	WT. LBS.
in	mm	in	mm	ft	m			
4	100	3/8	10	50	15.2	SKPU-4X3/8X50	91293	42.3
4	100	1/2	12	50	15.2	SKPU-4X1/2X50	91294	56.4
4	100	5/8	16	50	15.2	SKPU-4X5/8X50	91295	70.5
4	100	3/4	19	50	15.2	SKPU-4X3/4X50	91296	84.6
4	100	1	25	50	15.2	SKPU-4X1X50	91297	112.8
6	150	3/8	10	50	15.2	SKPU-6X3/8X50	91301	63.5
6	150	1/2	12	50	15.2	SKPU-6X1/2X50	91222	84.6
6	150	5/8	16	50	15.2	SKPU-6X5/8X50	91302	105.8
6	150	3/4	19	50	15.2	SKPU-6X3/4X50	91223	126.9
6	150	1	25	50	15.2	SKPU-6X1X50	91303	169.2
8	200	3/8	10	50	15.2	SKPU-8X3/8X50	91307	84.6
8	200	1/2	12	50	15.2	SKPU-8X1/2X50	91224	112.8
8	200	5/8	16	50	15.2	SKPU-8X5/8X50	91308	141.0
8	200	3/4	19	50	15.2	SKPU-8X3/4X50	91225	169.2
8	200	1	25	50	15.2	SKPU-8X1X50	91309	225.6
10	250	3/8	10	50	15.2	SKPU-10X3/8X50	91315	105.8
10	250	1/2	12	50	15.2	SKPU-10X1/2X50	91316	141.0
10	250	5/8	16	50	15.2	SKPU-10X5/8X50	91317	176.3
10	250	3/4	19	50	15.2	SKPU-10X3/4X50	91318	211.5
10	250	1	25	50	15.2	SKPU-10X1X50	91319	282.0
12	300	3/8	10	50	15.2	SKPU-12X3/8X50	91325	126.9
12	300	1/2	12	50	15.2	SKPU-12X1/2X50	91326	169.2
12	300	5/8	16	50	15.2	SKPU-12X5/8X50	91327	211.5
12	300	3/4	19	50	15.2	SKPU-12X3/4X50	91328	253.8
12	300	1	25	50	15.2	SKPU-12X1X50	91329	338.4

Price Per Inch for reference only; skirting is available standard in 25' (15.2M) lengths.
Shaded items are made to order; 1-2 week lead time

Product Notes:

- Urethane skirting offers a more wear-resistant material than typical rubber, often providing as much as 3-4 times the wear life in similar applications. The lower coefficient of friction reduces strain on the system.
- Works with Flexco series of skirt clamps that offer simple serviceability: RMC1/PAL-Pak, Flex-Lok, and Flex-Seal.
- Uses soft durometer (65A) urethane with exceptional tear resistance to ensure a good seal and long belt life.
- 25' (7.6M) roll size ensures easy transportation, while the 35° chamfer eliminates the typical skirting break-in period.
- Suitable for most applications: single direction or reversing belts, wet or dry conditions, old or new belts, vulcanized or mechanically-spliced systems.
- Rated for temperatures from -20°F to 180°F (-30°C to 82°C).

Product Ordering Information

Dual Seal Polyurethane Skirting

Height		Thickness		Length		CHAMFER	ORDERING NUMBER	ITEM CODE	WT. LBS.
in	mm	in	mm	ft	m				
6	150	1/2	12	25	7.6	35°	SKPU-DUAL-6X1/2X25	91400	47.0
6	150	3/4	20				SKPU-DUAL-6X3/4X25	91401	67.8
8	200	1/2	12				SKPU-DUAL-8X1/2X25	91402	60.5
8	200	3/4	20				SKPU-DUAL-8X3/4X25	91403	88.1
6	150	1/2	12	50	15.2		SKPU-DUAL-6X1/2X50	91404	94.0
6	150	3/4	20				SKPU-DUAL-6X3/4X50	91405	135.5
8	200	1/2	12				SKPU-DUAL-8X1/2X50	91406	121.0
8	200	3/4	20				SKPU-DUAL-8X3/4X50	91407	176.1

Price Per Inch for reference only; skirting is available standard in 25' (7.6m) lengths.
Lead time: 1 working day
Shaded items are made to order; 1 week lead time

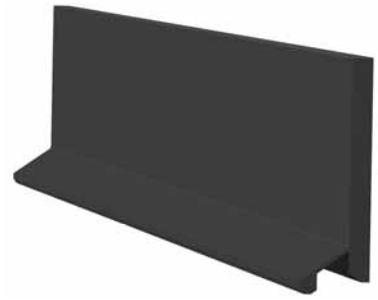

Product Notes:

- Secondary seal provides a floating contact area behind the main slab to prevent spillage.
- Polyurethane skirting offers a more wear-resistant material than typical rubber, often providing as much as 3-4 times the wear life in similar applications.
  The lower coefficient of friction reduces strain on the system.
- Works with Flexco series of skirt clamps that offer simple serviceability: RMC1/PAL-Pak, Flex-Lok™, and Flex-Seal™.
- Uses soft durometer (65A) polyurethane with exceptional tear resistance to ensure a good seal and long belt life.
- 25' (7.6m) roll size ensures easy transportation, while the 35° chamfer eliminates the typical skirting break-in period.
- Suitable for most applications: single direction or reversing belts, wet or dry conditions, old or new belts, vulcanized or mechanically-spliced systems.
- Rated for temperatures from -20°F to 180°F (-30°C to 82°C).

Product Ordering Information

RMC1 Skirt Clamps*

DESCRIPTION	ORDERING NUMBER	ITEM CODE	WT. LBS.
Skirt Clamp	RMC1	75817	11.6
LS Skirt Clamp	RMC1-LS	75834	10.4
Skirt Clamp 50 Pack	RMC1-50	75833	580.0

*Includes two clamp plates (Standard or LS - Limited Space), two clamp pins, and one 4' (1.2M) clamp bar.
Skirt board and rubber not included.
Skirt Rubber Thickness Range: 5/16" to 3/4" (8mm to 19mm).
Lead time: 1 working day

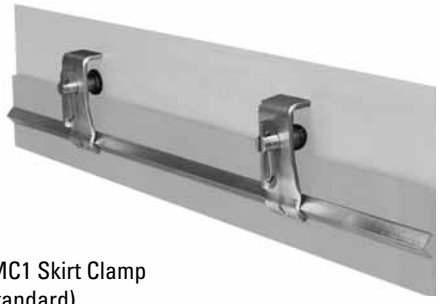

RMC1 Skirt Clamp (Standard)

Anti-Vibration Clamp Pins

PAL PAKs

The Pick-A-Length (PAL) PAK contains 2 clamp plates and 2 clamp pins.
You supply the clamp bar (1" x 1" x 1/8" angle) to your required length.

PAL PAKS PER SYSTEM LENGTH					
Skirting System Length	1' - 4' (0.3-1.2M)	5' - 8' (1.5-2.4M)	9' - 12' (2.8-3.8M)	13' - 16' (4.0-4.9M)	17' - 20' (5.2-6.1M)
PAL PAKs Needed	1	2	3	4	5

DESCRIPTION	ORDERING NUMBER	ITEM CODE	WT. LBS.
PAL PAK	RMC1-PP	75832	6.6
LS PAL PAK	RMC1-LSPP	75836	5.4
Bolt-On PAL PAK	RMC1-BPP	76415	6.5
Bolt-On LS PAL PAK	RMC1-LSBPP	76538	5.3

Lead time: 1 working day

PAL PAK (Standard)

Bolt-On PAL PAK (Standard)

Replacement Parts

DESCRIPTION	ORDERING NUMBER	ITEM CODE	WT. LBS.
Clamp Pin	RMC1-CP	75819	1.1
Bolt-On Clamp Pin	RMC1-BCP	76414	1.0
Clamp Plate	RMC1-PL	75821	2.1
LS Clamp Plate	RMC1LS-PL	75835	1.5
Clamp Bar	RMC1-CB	75820	4.0

Lead time: 1 working day

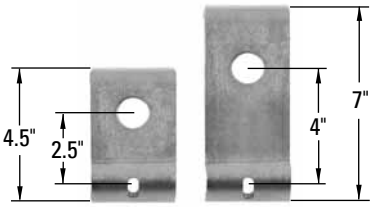

LS (Limited Space) Standard

Two models are available to fit your conveyor requirements.

Product Notes:

- Solves material spillage problems in the conveyor loading zone.
- Stops material loss, eliminates safety hazards, and reduces wear on conveyor components.
- LS (Limited Space) model for restricted space areas and for portable equipment.
- Pick-A-Length (PAL) PAK option for special or longer length requirements.
- Bolt-on Clamp Pins eliminate welding on applications where sparking can be a safety hazard.
- Anti-Vibration (standard) Clamp Pin stays locked even in applications with severe vibration.

Product Ordering Information

Flex-Lok™ Skirt Clamp

One Skirt Clamp includes one 6' (1.8M) clamp runner, 4 clamp plates, 4 clamp pins and one 6' (1.8M) restraining bar.
Skirt board and rubber not included.

DESCRIPTION	ORDERING NUMBER	ITEM CODE	WT. LBS.
Skirt Clamp	FLSC-I	71052	31.1
Skirt Clamp 50 Pack	FLSC-I-50	71054	1,555.0
REPLACEMENT PARTS			
Clamp Runner - 6 ft. (1.8M)	FL-RPI	71058	7.3
Clamp Plate	FL-PC-I	71057	2.1
Clamp Pin	FL-CP-I	71141	1.9
Restraining Bar - 6 ft. (1.8M)	FL-RBI	71060	11.3

Skirt Rubber Thickness Range: 5/16" to 1" (8 - 25mm)
Lead time: 1 working day

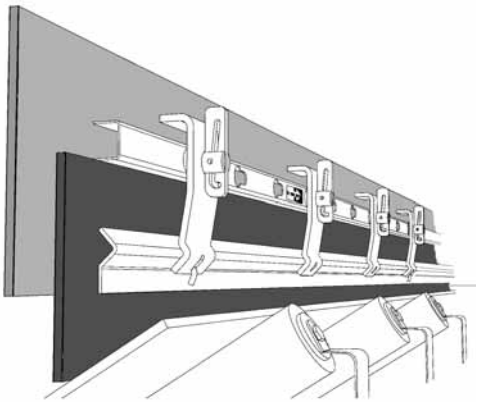

Standard

Mini Flex-Lok™ Skirt Clamp

One Mini Skirt Clamp includes one 6' (1.8M) clamp runner, 3 mini clamp plates, 3 clamp pins and one 6' (1.8M) restraining bar. Skirt board and rubber not included.

DESCRIPTION	ORDERING NUMBER	ITEM CODE	WT. LBS.
Mini Skirt Clamp	FLSCM-I	71055	27.6
Mini Skirt Clamp 50 Pack	FLSCM-I-50	71100	1,380.0
REPLACEMENT PARTS			
Clamp Runner - 6 ft. (1.8M)	FL-RPI	71058	7.3
Mini Clamp Plate	FLM-PC	71140	1.5
Clamp Pin	FL-CP-I	71141	1.9
Restraining Bar - 6 ft. (1.8M)	FL-RBI	71060	11.3

Skirt Rubber Thickness Range: 5/16" to 5/8" (8 - 16mm)
Lead time: 1 working day

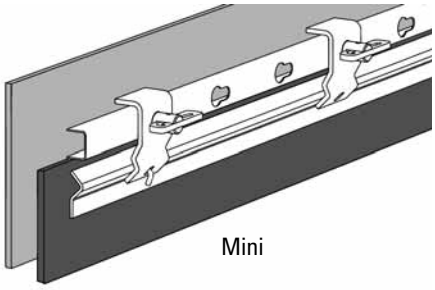

Mini

Shaded items are made to order.
Lead time: 5 working days

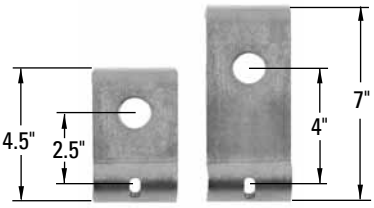

Mini Standard

Two models are available to fit your conveyor requirements.

Stainless Steel* Flex-Lok™ Skirt Clamp

One SS Skirt Clamp includes one 6' (1.8M) clamp runner, 4 clamp plates, 4 clamp pins and one 6' (1.8M) restraining bar.

DESCRIPTION	ORDERING NUMBER	ITEM CODE	WT. LBS.
SS Skirt Clamp	FLSC-ISS	75778	25.0
REPLACEMENT PARTS			
SS Clamp Plate	FL-PC-ISS	71168	1.9
Clamp Pin	FL-CP-ISS	71164	1.9

Lead time: 1 working day

Anti-Vibration Clamp Pins
(Standard)

SERVICE MAINTENANCE

- Inspection – Periodically inspect the clearance between the skirt rubber and the belt. If this gap is more than 1/4" (6mm) or if excessive fines are escaping, readjust the skirt rubber.
- Adjustment – Unlock the wedges on the clamp pins and slide the skirt rubber down to the belt. Relock the clamp pins.

TROUBLESHOOTING

Problem: Skirt rubber slips out of skirt clamp.
Solution: 1. Check to insure wedges in clamp pins are locked.
2. Check skirt rubber position. Skirt rubber must not fold and lie on top of belt.

Product Ordering Information

Belt Width	Height		Length		Ordering Number	Item Code	Wt. Lbs.
	in.	mm	in.	mm			
Straight Liner Kit with 1/4" (6mm) AR400	14 1/2	368	48	1200	SLAWK-48	93115	75.2
Straight Liner Kit with 1" (25mm) Canoe Liner	14 1/2	368	48	1200	SLUWK-48	93116	76.4
Tangent Liner Kit with 1/4" (6mm) AR400	14 1/2	368	48	1200	TLAWK-48	93117	96.3
Tangent Liner Kit with 1" (25mm) Canoe Liner	14 1/2	368	48	1200	TLUWK-48	93118	95.9

Includes on 48" (1200mm) section
Lead time: 1 working day

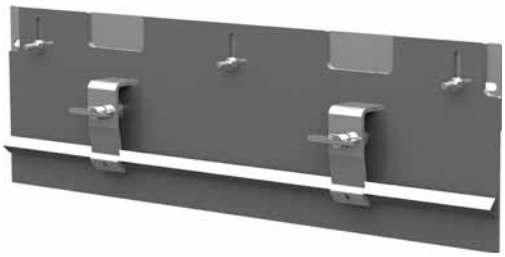

Straight Liner Kit with 1/4" (6mm) AR400

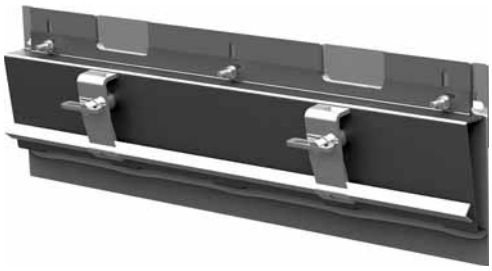

Tangent Liner Kit with 1/4" (6mm) AR400

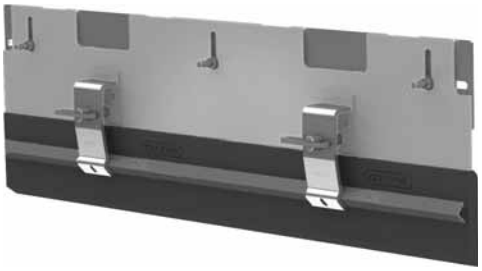

Straight Liner Kit with 1" (25mm) Canoe Liner

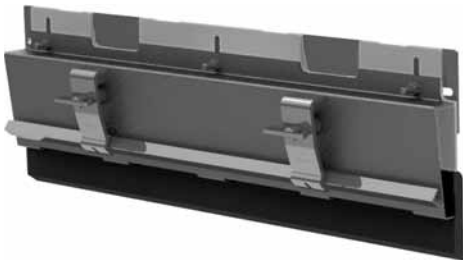

Tangent Liner Kit with 1" (25mm) Canoe Liner

Replacement Parts

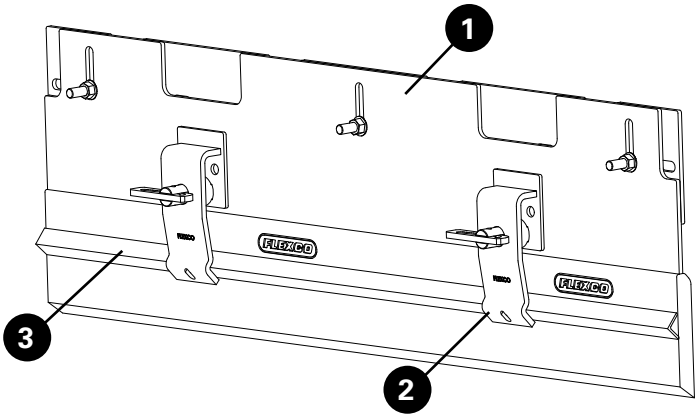

Ref	Belt Width	Ordering Number	Item Code	Wt. Lbs.
1	Replacement Straight Liner with 1/4" (6mm) AR400	SL-48	91841	45.4
	Replacement Straight Liner with 1" (25mm) Canoe Liner	TL-48	91842	45.6
	Replacement Tangent Liner with 1/4" (6mm) AR400	SLU-48	93113	47.2
	Replacement Tangent Liner with 1" (25mm) Canoe Liner	TLU-48	93114	45.3
2	Bolt-On Pal Pak	RMC1-BPP	76415	6.5
3	Clamp Bar	RMC1-CB	75820	4.0

Product Notes:

- Solves material spillage problems in the conveyor loading zone.
- Stops material loss, eliminates safety hazards, and reduces wear on conveyor components.
- Combines new liner wall with existing Flexco Skirting Kits to provide an upgraded sealing edge.
- Wear liner adjustable from outside the chute for quick and easy service.
- With long wearing 1/4" (6mm) AR400 plate or 1" (25mm) Polyurethane Canoe Liner

Product Ordering Information

Flex-Seal™ Skirt System*

DESCRIPTION	ORDERING NUMBER	ITEM CODE	WT. LBS.
Flex-Seal Skirt System	RMC2-FS1	76558	29.5
Flex-Seal Skirt System 50 Pack	RMC2-FS-50	77330	1,475.0

*Includes angle plate, one Bolt-On PAL PAK, and one 4' (1.2M) clamp bar.
Skirt board and rubber not included.
Skirt Rubber Thickness Range: 5/16" to 3/4" (8mm to 19mm).
Lead time: 1 working day

Replacement Parts

DESCRIPTION	ORDERING NUMBER	ITEM CODE	WT. LBS.
Angle Plate	RMC2-FSAPK	76559	19.0
Bolt-On PAL PAK*	RMC1-BPP	76415	6.5
Clamp Bar	RMC1-CB	75820	4.0

*Includes two bolt-on clamp pins and two clamp plates.
Lead time: 1 working day

Bolt-On PAL PAK

Specifications

SKIRT RUBBER WIDTH AND THICKNESS RANGE	
Width Required	6" (150mm)
Thickness Range	5/16" - 3/4" (8 - 19mm)

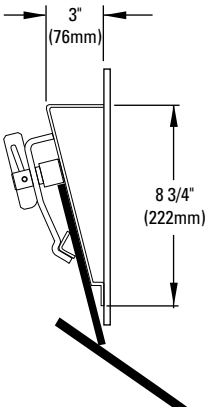

Allows skirt rubber to seal on the belt.

Product Notes:

- Solves material spillage problems in the conveyor loading zone.
- Stops material loss, eliminates safety hazards, and reduces wear on conveyor components.
- Anti-Vibration (standard) Clamp Pin with serrated wedge stays locked even in applications with severe vibration.

Product Ordering Information

Flex-Lifter™ Conveyor Belt Lifter

Easy and safe way to lift tensioned belts so mechanical splicing or other maintenance work can be done.

DESCRIPTION	ORDERING NUMBER	ITEM CODE	WT. LBS.
Medium Flex-Lifter 36" – 60" (900 – 1500 mm) incl. return bar	FL-M	76469	91.0
Large Flex-Lifter 48" – 72" (1200 – 1800 mm) incl. return bar	FL-L	76470	128.0
XL Flex-Lifter 72" – 96" (1800 – 2400 mm) does not incl. return bar	FL-XL	76983	128.0
Flex-Lifter Cart	FLCK	77729	20.0

Lifts troughed or flat belts.
Lead time: 1 working day

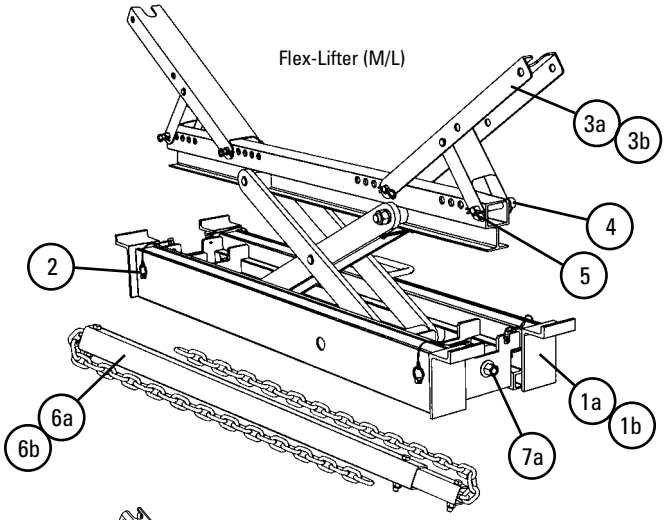

Replacement Parts

REF	DESCRIPTION	ORDERING NUMBER	ITEM CODE	WT. LBS.
1a	Extension Leg – Medium	FLEL-M	76472	3.1
1b	Extension Leg – Large	FLEL-L	76473	3.7
1c	Extension Leg Kit – XL (includes 2 ext. legs)	FLELK-XL	76986	13.0
2	Extension Leg Pin (with lanyard)	FLELP	76474	0.1
3a	Trough Wing – Medium (with brace)	FLTW-M	76476	1.2
3b	Trough Wing – Large (with brace)	FLTW-L	76477	1.5
3c	Trough Wing – XL (with brace)	FLTW-XL	76985	4.2
4	Retainer Pin Pack (includes 4 pins)	FLRP	76478	1.0
5	Retainer Clip Pack (includes 4 clips)	FLCP	76479	0.1
6a	Return Lift Bar – Medium	FLRLB-M	76482	25.0
6b	Return Lift Bar – Large	FLRLB-L	76481	50.0
6c	V-Return Lift Bar – XL	FLVRL-XL	76984	63.0
7a	Shear Pin Kits – Medium/Large	FL-PKIT-ML	77250	0.3
7b	Shear Pin Kits – XL	FL-PKIT-XL	77251	0.5

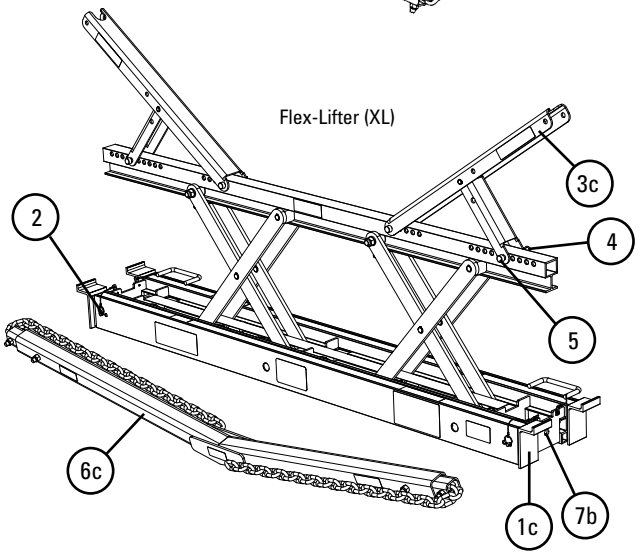

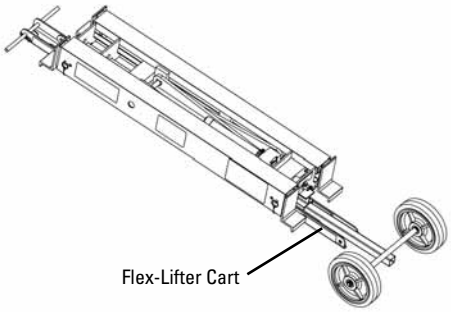

Safe Lifting Capacity

Height		Max. Weight			
		Medium/Large		XL	
in.	mm	lbs.	kg.	lbs.	kg.
0-1	0-25	500	225	1100	500
1-2	25-50	1000	450	1800	815
2-3	50-75	1500	675	2500	1140
3-4	75-100	2000	900	3200	1450
4-5	100-125	2500	1150	3700	1680
5-6	125-150	3000	1350	4600	2090
6-7	150-175	3500	1600	5300	2400
>7	>175	4000	1800	6000	2725

Aluminum Content Flex-Lifter

ALUMINUM ALLOY TYPE	PERCENT	
	Mg Magnesium	Ti Titanium
4043	0.05%	0.2%
5356	5.5%	0.2%
6005	0.6%	0.1%
6061	1.0%	0.0%
6063	0.7%	0.0%
7075	2.5%	0.0%

Product Ordering Information

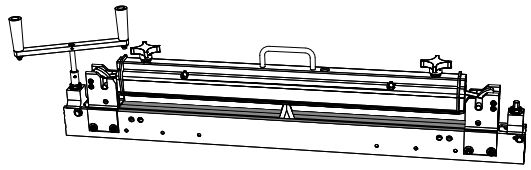

Aluminum Content 900 Series Belt Cutter

ALUMINUM ALLOY TYPE	PERCENT Mg Magnesium	PERCENT Ti Titanium
6005	0.6%	0.1%
6061	1.0%	0.0%
7075	2.5%	0.0%

900 Series* Belt Cutter

DESCRIPTION	BELT WIDTH in.	BELT WIDTH mm	ORDERING NUMBER	ITEM CODE	WT. LBS.	PRICE
Cutter Complete for belts up to 1.5" (38 mm)	24	600	900924	04200	34.0	**$ 2,031.37**
	36	900	900936	04143	39.4	**2,095.70**
	48	1200	900948	04144	48.0	**2,241.63**
	60	1500	900960	04145	54.0	**2,392.00**
	72	1800	900972	04146	60.3	**2,552.93**
	84	2130	900984	04147	86.0	**3,282.89**
Replacement Blade Kit			900CBK	04149	0.15	**186.45**
Drive Handle Assembly				04140	2.0	**131.83**

Lead time: 1 working day

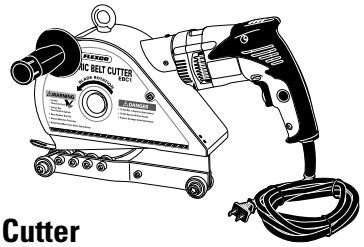

Electric Belt Cutter

DESCRIPTION	ORDERING NUMBER	ITEM CODE	WT. LBS.	PRICE
Electric Cutter Complete	EBC1	30001	30.0	**$4,811.68**
Electric Cutter Complete	EBC2	30002	40.0	**5,711.59**
Cordless Electric Cutter Complete	CEBC1	30018	30.0	**5,265.87**
Cordless Electric Cutter Complete	CEBC2	30019	40.0	**6,500.88**
Electric Cutter Complete 220V	EBC1-220	30011	30.0	**4,950.92**
Electric Cutter Complete 220V	EBC2-220	30012	40.0	**5,765.96**
Cordless Electric Cutter Complete 220V	CEBC1-220	30021	30.0	**5,423.85**
Cordless Electric Cutter Complete 220V	CEBC2-220	30022	40.0	**6,562.78**

Cutting Capacity

BELT TYPE	EBC1/CEBC1 Imperial	EBC1/CEBC1 Metric	EBC2/CEBC2 Imperial	EBC2/CEBC2 Metric
Rubber	Up to 1"	Up to 25 mm	Up to 2"	Up to 50 mm
PVC	Up to 360 PIW	Up to 630 kN/m	Up to 1140 PIW	Up to 2000 kN/m

Electric Belt Cutter

DESCRIPTION	ORDERING NUMBER	ITEM CODE	WT. LBS.	PRICE
Spare Parts List				
Replacement blade for EBC1/CEBC1	EBC1-B	30003	2.0	**$410.84**
Replacement blade for EBC2/CEBC2	EBC2-B	30004	2.8	**700.15**
Replacement electric hammer drill for EBC1	EBC1-DR	30005	7.5	**271.54**
Replacement electric hammer drill for EBC2	EBC2-DR	30006	12.1	**541.88**
Replacement electric hammer drill for EBC1-220	EBC1-220-DR	30013	7.5	**271.54**
Replacement electric hammer drill for EBC2-220	EBC2-220-DR	30014	12.1	**541.88**
Replacement cordless hammer drill for CEBC1	CEBC1-DRNS4A	37043	12.8	**570.06**
Replacement cordless hammer drill for CEBC2	CEBC2-DR18V	30040	12.3	**542.92**
Replacement battery 4Ah	CEBC1/CEBC2-BAT4A	37076	1.5	**227.81**
Replacement battery 5Ah	CEBC1/CEBC2-BAT5A	37447	1.5	**240.88**
Replacement coupling for EBC1	EBC1CLPG	30016	0.2	**163.66**
Replacement coupling for EBC2	EBC2CLPG	30017	0.2	**166.82**
Replacement coupling for CEBC1	CEBC1CPLG	30031	0.2	**163.70**
Replacement coupling for CEBC2	CEBC2CLPG	30032	0.2	**166.87**
Replacement eye bolt for EBC1 & EBC2	EBC-EB	30007	0.9	**16.47**
Replacement handle for EBC1 & EBC2	EBC-H	30008	0.4	**34.36**
Replacement bearing kit for EBC1 & EBC2	EBC/CEBC-BK	30024	1.1	**158.27**
Retrofit rail kit for EBC1/CEBC1	EBC1-RK	30033	1.3	**149.65**
Retrofit rail kit for EBC2/CEBC2	EBC2-RK	30034	1.6	**171.82**

Far-Pul™ HD® Belt Clamps

Load Capacity up to 3 tons (2.7 metric tons) when used with two 1-1/2 ton (1.4 metric ton) come-alongs.

DESCRIPTION	BELT WIDTH in.	BELT WIDTH mm	ORDERING NUMBER	ITEM CODE	WT. LBS.	PRICE
Belt Clamp Complete includes: 4 Belt Clamp Bars and 4 Belt Clamp Scissors	Up to 30	Up to 750	LSHD30	30393	79.0	**$ 1,457.43**
	Up to 36	Up to 900	LSHD36	30394	87.0	**1,517.17**
	Up to 42	Up to 1050	LSHD42	30395	91.0	**1,579.20**
	Up to 48	Up to 1200	LSHD48	30396	98.0	**1,638.93**
	Up to 54	Up to 1350	LSHD54	30397	103.0	**1,700.96**
	Up to 60	Up to 1500	LSHD60	30398	110.0	**1,765.30**
	Up to 72	Up to 1800	LSHD72	30399	121.0	**1,831.96**
30" Belt Clamp Bar Set*	Up to 30	Up to 750	LSHDB30-2	30418	20.0	**409.93**
36" Belt Clamp Bar Set*	Up to 36	Up to 900	LSHDB36-2	30414	23.0	**442.72**
42" Belt Clamp Bar Set*	Up to 42	Up to 1050	LSHDB42-2	30421	26.0	**475.53**
48" Belt Clamp Bar Set*	Up to 48	Up to 1200	LSHDB48-2	30423	30.0	**508.32**
54" Belt Clamp Bar Set*	Up to 54	Up to 1350	LSHDB54-2	30424	33.0	**541.12**
60" Belt Clamp Bar Set*	Up to 60	Up to 1500	LSHDB60-2	30430	36.0	**573.95**
72" Belt Clamp Bar Set*	Up to 72	Up to 1800	LSHDB72-2	30408	40.0	**639.53**
Steel Belt Clamp Scissor - Each			LSHDS	30392	10.5	**158.68**
Belt Locator Pin - includes Washer and Locking Nut			LSHDLP	30400	.15	**25.66**
Retaining Pin Kit			LSHD-RPK	30390	2.0	**133.06**
Clamp Bar Screw			LSHDCBS	30373	1.0	**76.75**
Clamp Bar Pivot Pin (Pair) - includes 2 roll pins			LSHDPP	30052	1.0	**70.99**

*Includes 2 Bars per Set
Lead time: 1 working day

Shaded items are made to order.
Lead time: 5 working days

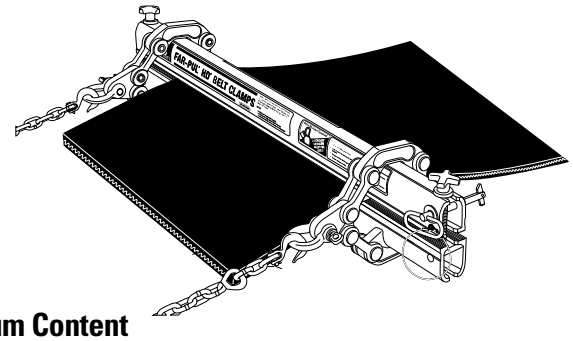

Aluminum Content Far-Pul™ HD®

ALUMINUM ALLOY TYPE	PERCENT Mg Magnesium	PERCENT Ti Titanium
6061	1.0%	0.0%

Product Ordering Information

Flex-Lag® Light Duty Rubber**

PATTERN	THICKNESS in.	THICKNESS mm	LENGTH ft.	LENGTH m	MATERIAL	ORDERING NUMBER	ITEM CODE
Light Duty	.3	7.5	11	3.3	SBR	7.5NLD3.3/11	71077
Light Duty	.3	7.5	11	3.3	Nitrile	7.5WLD3.3/11	71076

Flex-Lag® Roll Lagging - SBR Rubber**

PATTERN	THICKNESS in.	THICKNESS mm	LENGTH ft.	LENGTH m	ORDERING NUMBER	ITEM CODE
Diamond	3/8	10	21	6.5	10ND6.5/21	71002
Diamond	1/2	12	21	6.5	12ND6.5/21	71004
Diamond	5/8	15	21	6.5	15ND6.5/21	71006
Diamond	3/4	20	21	6.5	20ND6.5/21	71008
Diamond	1	25	21	6.5	25ND6.5/21	71152
Plain	3/8	10	21	6.5	10NP6.5/21	71010
Plain	1/2	12	21	6.5	12NP6.5/21	71012
Plain	5/8	15	21	6.5	15NP6.5/21	71017
Plain	3/4	20	21	6.5	20NP6.5/21	71021
Plain	1	25	21	6.5	25NP6.5/21	71163
Diamond Ceramic	1/2	12	21	6.5	12NDC6.5/21	71155
Medium Ceramic	5/8	15	21	6.5	CLMN6.5/21-15	62216

Flex-Lag® Roll Lagging - FRAS Rubber**

PATTERN	THICKNESS in.	THICKNESS mm	LENGTH ft.	LENGTH m	ORDERING NUMBER	ITEM CODE
Diamond	3/8	10	21	6.5	10FRD6.5/21	71014
Diamond	1/2	12	21	6.5	12FRD6.5/21	71016
Diamond	5/8	15	21	6.5	15FRD6.5/21	71018
Diamond	3/4	20	21	6.5	20FRD6.5/21	71019
Plain	3/8	10	21	6.5	10FRP6.5/21	71020
Plain	1/2	12	21	6.5	12FRP6.5/21	71022
Plain	5/8	15	21	6.5	15FRP6.5/21	71015
Plain	3/4	20	21	6.5	20FRP6.5/21	72129
Diamond Ceramic	1/2	12	21	6.5	12FRDC6.5/21	71159
Medium Ceramic	5/8	15	21	6.5	CLMFR6.5/21-15	61319

FRAS (Fire Resistant Anti Static) MSHA Certification # - MSHA NO. IC-190
Ordering Number Key: **N** - SBR, **FR** - FRAS, **P** - Plain, **D** - Diamond, **DC** - Diamond Ceramic, **LD**- Light Duty

Strip Selection Chart

Pulley Diameter in.	Pulley Diameter mm	Strips Req'd	Pulley Diameter in.	Pulley Diameter mm	Strips Req'd
12.6-15.0	320-381	6	42.6-45.0	1083-1145	18
15.1-17.5	382-445	7	45.1-47.5	1146-1210	19
17.6-20.0	446-510	8	47.6-50.1	1211-1273	20
20.1-22.5	511-573	9	50.2-52.6	1274-1336	21
22.6-25.0	574-636	10	52.7-55.1	1337-1400	22
25.1-27.5	637-700	11	55.2-57.6	1403-1463	23
27.6-30.0	701-764	12	57.7-60.1	1466-1527	24
30.1-32.5	765-827	13	60.2-62.6	1529-1590	25
32.6-35.0	828-891	14	62.7-65.1	1593-1654	26
35.1-37.5	892-955	15	65.2-67.6	1656-1717	27
37.6-40.0	956-1018	16	67.7-70.1	1720-1781	28
40.1-42.5	1019-1082	17	70.2-72.6	1783-1844	29

Strips = Pulley Diameter (in) x 3.14 ÷ 8, then round up.

$$\text{Rolls} = \frac{\text{Strips x (Face Width + 4")}}{\text{A or B}}$$

A = Light Duty = 132"; B = All Others = 252"

* For Flex-Lag® Light Duty Rubber all material is 8" (200mm) wide and 10.8' (3.3M) rolls.

** For Flex-Lag® Natural Rubber and Flame-Resistant Rubber, all material is 8" (200mm) wide in 21' (6.5M) rolls.

Shaded items are made to order.
Lead time: 8 -10 weeks

Light Duty Lagging

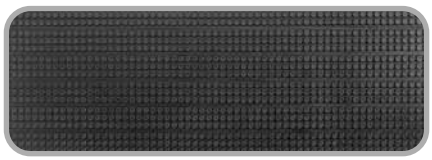

Diamond Ceramic Lagging

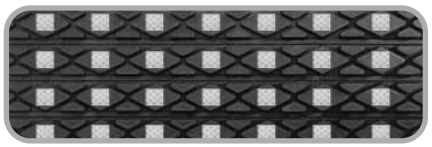

Diamond Grooved Lagging

Plain Grooved Lagging

Specifications:

Temperature Rating
5°F to 185° F (-15° C to 85° C)

Rubber Compound
SBR (Styrene-Butadiene-Rubber)

Rubber Hardness
68 ± 3 Shore A

Ceramic Compound (Diamond Ceramic Lagging)
Aluminum Oxide (Al_2O_3)

Ceramic Hardness (Diamond Ceramic Lagging)
83 HRA Rockwell Hardness Scale A

Product Ordering Information

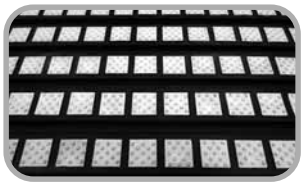

Flex-Lag® Medium Ceramic Lagging - SBR Rubber

THICKNESS		BELT WIDTH		CERAMIC LENGTH		STRIP LENGTH		DIMPLED TILE		SMOOTH TILE	
in.	mm	in.	mm	in.	mm	in.	mm	ORDERING NUMBER	ITEM CODE	ORDERING NUMBER	ITEM CODE
5/8	15	18	450	18 5/8	474	35	880	CLMN450/18-15	61294	CLMN450/18-15S	62052
		24	600	24 5/8	626	41	1032	CLMN600/24-15	61295	CLMN600/24-15S	62053
		30	750	30 5/8	779	47	1185	CLMN750/30-15	61296	CLMN750/30-15S	62054
		36	900	36 5/8	931	53	1337	CLMN900/36-15	61297	CLMN900/36-15S	62055
		42	1050	42 5/8	1082	59	1488	CLMN1050/42-15	61298	CLMN1050/42-15S	62056
		48	1200	48 5/8	1235	65	1641	CLMN1200/48-15	61299	CLMN1200/48-15S	62057
		54	1350	54 5/8	1388	71	1794	CLMN1350/54-15	61300	CLMN1350/54-15S	62058
		60	1500	60 5/8	1541	77	1947	CLMN1500/60-15	61301	CLMN1500/60-15S	62059
		72	1800	72 5/8	1842	89	2248	CLMN1800/72-15	61302	CLMN1800/72-15S	62060
		84	2100	84 7/8	2155	101	2561	CLMN2100/84-15	61303	CLMN2100/84-15S	62061

Flex-Lag® Medium Ceramic Lagging - FRAS Rubber

THICKNESS		BELT WIDTH		CERAMIC LENGTH		STRIP LENGTH		DIMPLED TILE		SMOOTH TILE	
in.	mm	in.	mm	in.	mm	in.	mm	ORDERING NUMBER	ITEM CODE	ORDERING NUMBER	ITEM CODE
5/8	15	18	450	18 5/8	474	35	880	CLMFR450/18-15	61308	CLMFR450/18-15S	62063
		24	600	24 5/8	626	41	1032	CLMFR600/24-15	61309	CLMFR600/24-15S	62064
		30	750	30 5/8	779	47	1185	CLMFR750/30-15	61310	CLMFR750/30-15S	62065
		36	900	36 5/8	931	53	1337	CLMFR900/36-15	61311	CLMFR900/36-15S	62066
		42	1050	42 5/8	1082	59	1488	CLMFR1050/42-15	61312	CLMFR1050/42-15S	62067
		48	1200	48 5/8	1235	65	1641	CLMFR1200/48-15	61313	CLMFR1200/48-15S	62068
		54	1350	54 5/8	1388	71	1794	CLMFR1350/54-15	61314	CLMFR1350/54-15S	62069
		60	1500	60 5/8	1541	77	1947	CLMFR1500/60-15	61315	CLMFR1500/60-15S	62070
		72	1800	72 5/8	1842	89	2248	CLMFR1800/72-15	61316	CLMFR1800/72-15S	62071
		84	2100	84 7/8	2155	101	2561	CLMFR2100/84-15	61317	CLMFR2100/84-15S	62072

FRAS (Fire Resistant Anti Static) MSHA Certification # - MSHA NO. IC-190
Ordering Number Key: **N** - SBR, **FR** - FRAS

Shaded items are made to order.
Lead time: 8 -10 weeks

CERAMIC STRIP CONFIGURATION

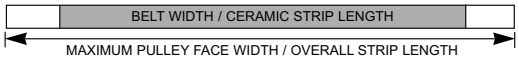

Strips Required = Pulley Diameter (in) x 3.14 ÷ 8, then round up.

Strip Selection

PULLEY DIAMETER		STRIPS	PULLEY DIAMETER		STRIPS
in.	mm	REQ'D	in.	mm	REQ'D
12.6-15.0	320-381	6	42.6-45.0	1083-1145	18
15.1-17.5	382-445	7	45.1-47.5	1146-1210	19
17.6-20.0	446-510	8	47.6-50.1	1211-1273	20
20.1-22.5	511-573	9	50.2-52.6	1274-1336	21
22.6-25.0	574-636	10	52.7-55.1	1337-1400	22
25.1-27.5	637-700	11	55.2-57.6	1403-1463	23
27.6-30.0	701-764	12	57.7-60.1	1466-1527	24
30.1-32.5	765-827	13	60.2-62.6	1529-1590	25
32.6-35.0	828-891	14	62.7-65.1	1593-1654	26
35.1-37.5	892-955	15	65.2-67.6	1656-1717	27
37.6-40.0	956-1018	16	67.7-70.1	1720-1781	28
40.1-42.5	1019-1082	17	70.2-72.6	1783-1844	29

Specifications:

Temperature Rating
5°F to 185° F (-15° C to 85° C)

Rubber Compound
SBR (Styrene-Butadiene-Rubber)

Rubber Hardness
68 ± 3 Shore A

Ceramic Compound
Aluminum Oxide (Al_2O_3)

Ceramic Hardness
83 HRA Rockwell Hardness Scale A

39% Ceramic Coverage
Strips are 8" (200mm) wide

Product Notes:

- No wasted ceramic with easy-to-specify dimensions by using pulley or belt width.
- Constructed from individual ceramic tiles molded into high-durometer rubber for superior abrasion resistance.
- Horizontal grooves trap and deflect water.
- Molded ceramic buttons grip the belt's underside for positive traction and no slippage.

Product Ordering Information

Flex-Lag® Full Ceramic Lagging - SBR Rubber

THICKNESS		BELT WIDTH		CERAMIC LENGTH		STRIP LENGTH		DIMPLED TILE		SMOOTH TILE	
in.	mm	in.	mm	in.	mm	in.	mm	ORDERING NUMBER	ITEM CODE	ORDERING NUMBER	ITEM CODE
1/2	12	18	450	18 1/2	460	34	860	CLN460/18.4-12	71111	CLN460/18.4-12S	79383
1/2	12	24	600	24	600	40	1000	CLN600/24-12	71112	CLN600/24-12S	79384
1/2	12	30	750	30 1/2	760	46	1160	CLN760/30.4-12	71113	CLN760/30.4-12S	79385
1/2	12	36	900	36	900	52	1300	CLN900/36-12	71115	CLN900/36-12S	79387
1/2	12	42	1050	42 1/2	1060	60	1500	CLN1060/42.4-12	71116	CLN1060/42.4-12S	79388
1/2	12	48	1200	48	1200	64	1600	CLN1200/48-12	71039	CLN1200/48-12S	79389
1/2	12	54	1350	54 1/2	1360	72	1800	CLN1360/54.4-12	71126	CLN1360/54.4-12S	79390
1/2	12	60	1500	60 3/4	1520	80	2000	CLN1520/60.8-12	71127	CLN1520/60.8-12S	79392
1/2	12	72	1800	72	1800	92	2300	CLN1800/72-12	71042	CLN1800/72-12S	79395
1/2	12	84	2100	84	2100	104	2600	CLN2100/84-12	71044	CLN2100/84-12S	79398

Flex-Lag® Full Ceramic Lagging - FRAS Rubber

THICKNESS		BELT WIDTH		CERAMIC LENGTH		STRIP LENGTH		DIMPLED TILE		SMOOTH TILE	
in.	mm	in.	mm	in.	mm	in.	mm	ORDERING NUMBER	ITEM CODE	ORDERING NUMBER	ITEM CODE
1/2	12	18	450	18 1/2	460	34	860	CLFR460/18.4-12	71118	CLFR460/18.4-12S	79406
1/2	12	24	600	24	600	40	1000	CLFR600/24-12	71119	CLFR600/24-12S	79407
1/2	12	30	750	30 1/2	760	46	1160	CLFR760/30.4-12	71120	CLFR760/30.4-12S	79408
1/2	12	36	900	36	900	52	1300	CLFR900/36-12	71122	CLFR900/36-12S	79410
1/2	12	42	1050	42 1/2	1060	60	1500	CLFR1060/42.4-12	71123	CLFR1060/42.4-12S	79411
1/2	12	48	1200	48	1200	64	1600	CLFR1200/48-12	71005	CLFR1200/48-12S	79412
1/2	12	54	1350	54 1/2	1360	72	1800	CLFR1360/54.4-12	A1636	CLFR1360/54.4-12S	79413
1/2	12	60	1500	60 3/4	1520	80	2000	CLFR1520/60.8-12	71009	CLFR1520/60.8-12S	79415
1/2	12	72	1800	72	1800	92	2300	CLFR1800/72-12	71079	CLFR1800/72-12S	79418
1/2	12	84	2100	84	2100	104	2600	CLFR2100/84-12	71082	CLFR2100/84-12S	79421

FRAS (Fire Resistant Anti Static) MSHA Certification # - MSHA NO. IC-190
Ordering Number Key: **N** - SBR, **FR** - FRAS

Shaded items are made to order.
Lead time: 8 -10 weeks

CERAMIC STRIP CONFIGURATION

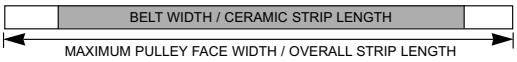

Strips Required = Pulley Diameter (in) x 3.14 ÷ 8, then round up.

Strip Selection Chart

Pulley Diameter		Strips Req'd	Pulley Diameter		Strips Req'd
in.	mm		in.	mm	
12.6-15.0	320-381	6	42.6-45.0	1083-1145	18
15.1-17.5	382-445	7	45.1-47.5	1146-1210	19
17.6-20.0	446-510	8	47.6-50.1	1211-1273	20
20.1-22.5	511-573	9	50.2-52.6	1274-1336	21
22.6-25.0	574-636	10	52.7-55.1	1337-1400	22
25.1-27.5	637-700	11	55.2-57.6	1403-1463	23
27.6-30.0	701-764	12	57.7-60.1	1466-1527	24
30.1-32.5	765-827	13	60.2-62.6	1529-1590	25
32.6-35.0	828-891	14	62.7-65.1	1593-1654	26
35.1-37.5	892-955	15	65.2-67.6	1656-1717	27
37.6-40.0	956-1018	16	67.7-70.1	1720-1781	28
40.1-42.5	1019-1082	17	70.2-72.6	1783-1844	29

Special Offerings

PRODUCT	PRICE COMPARED TO NATURAL RUBBER
15mm Thickness	+5%
20mm Thickness	+7 1/2%
25mm Thickness	+15%

Specifications:

Temperature Rating
5°F to 185° F (-15° C to 85° C)

Rubber Compound
SBR (Styrene-Butadiene-Rubber)

Rubber Hardness
68 ± 3 Shore A

Ceramic Compound
Aluminum Oxide (Al_2O_3)

Ceramic Hardness
83 HRA Rockwell Hardness Scale A

80% Ceramic Coverage
Strips are 8" (200mm) wide

Product Ordering Information

Flex-Lag® Adhesive/Activator/Primer

ORDERING NUMBER	DESCRIPTION	ITEM CODE	WEIGHT	VOLUME
FL-ADH-0.8	Adhesive	75017	1.6 lb. (0.7 Kg)	27.1 oz (0.8L)
FL-ACT	Activator	70186	0.1 lb. (40 g)	-
FL-PR-0.75	Primer	70189	1.6 lb. (0.7 Kg)	25.4 oz (0.75L)

Each Flex-Lag Adhesive is mixed with one Flex-Lag Activator. Refer to the usage chart below to calculate the number of cans required for your pulley. For sizes not included in the chart please contact Flexco Customer Service for assistance.

ADHESIVE 0.8L / ACTIVATOR 40g (1:1 ratio) (Covers 1,000 in²/.645 m²)

		Face Width																				
	In.	10	14	18	22	26	30	34	38	42	46	50	54	58	62	66	70	74	78	82	86	90
	mm	254	356	457	559	660	762	864	965	1067	1168	1270	1372	1473	1575	1676	1778	1880	1981	2083	2184	2286
Pulley Diameter	8 / 203	1	1	1	1	1	1	1	1	2	2	2	2	2	2	2	2	2	2	3	3	3
	12 / 305	1	1	1	1	1	2	2	2	2	2	2	3	3	3	3	3	3	3	4	4	4
	16 / 406	1	1	1	2	2	2	2	2	3	3	3	3	3	4	4	4	4	4	5	5	5
	20 / 508	1	1	2	2	2	2	3	3	3	3	4	4	4	4	5	5	5	5	6	6	6
	24 / 610	1	2	2	2	2	3	3	3	4	4	4	5	5	5	5	6	6	6	7	7	7
	28 / 711	1	2	2	2	3	3	3	4	4	5	5	5	6	6	6	7	7	7	8	8	8
	32 / 813	2	2	2	3	3	4	4	4	5	5	6	6	6	7	7	8	8	8	9	9	10
	36 / 914	2	2	3	3	3	4	4	5	5	6	6	7	7	8	8	8	9	9	10	10	11
	40 / 1016	2	2	3	3	4	4	5	5	6	6	7	7	8	8	9	9	10	10	11	11	12
	44 / 1118	2	2	3	4	4	5	5	6	6	7	7	8	9	9	10	10	11	11	12	12	13
	48 / 1219	2	3	3	4	4	5	6	6	7	7	8	9	9	10	10	11	12	12	13	13	14
	52 / 1321	2	3	3	4	5	5	6	7	7	8	9	9	10	11	11	12	13	13	14	15	15
	56 / 1422	2	3	4	4	5	6	6	7	8	9	9	10	11	11	12	13	14	14	15	16	16
	60 / 1524	2	3	4	5	5	6	7	8	8	9	10	11	11	12	13	14	14	15	16	17	17

PRIMER .75L (Covers 10,000 in²/6.45 m²)

		Face Width																				
	In.	10	14	18	22	26	30	34	38	42	46	50	54	58	62	66	70	74	78	82	86	90
	mm	254	356	457	559	660	762	864	965	1067	1168	1270	1372	1473	1575	1676	1778	1880	1981	2083	2184	2286
Pulley Diameter	8 / 203	1	1	1	1	1	1	1	1	1	1	1	1	1	1	1	1	1	1	1	1	1
	12 / 305	1	1	1	1	1	1	1	1	1	1	1	1	1	1	1	1	1	1	1	1	1
	16 / 406	1	1	1	1	1	1	1	1	1	1	1	1	1	1	1	1	1	1	1	1	1
	20 / 508	1	1	1	1	1	1	1	1	1	1	1	1	1	1	1	1	1	1	1	1	1
	24 / 610	1	1	1	1	1	1	1	1	1	1	1	1	1	1	1	1	1	1	1	1	1
	28 / 711	1	1	1	1	1	1	1	1	1	1	1	1	1	1	1	1	1	1	1	1	1
	32 / 813	1	1	1	1	1	1	1	1	1	1	1	1	1	1	1	1	1	1	1	1	1
	36 / 914	1	1	1	1	1	1	1	1	1	1	1	1	1	1	1	1	1	1	1	1	2
	40 / 1016	1	1	1	1	1	1	1	1	1	1	1	1	1	1	1	1	1	1	2	2	2
	44 / 1118	1	1	1	1	1	1	1	1	1	1	1	1	1	1	1	1	2	2	2	2	2
	48 / 1219	1	1	1	1	1	1	1	1	1	1	1	1	1	1	1	2	2	2	2	2	2
	52 / 1321	1	1	1	1	1	1	1	1	1	1	1	1	1	2	2	2	2	2	2	2	2
	56 / 1422	1	1	1	1	1	1	1	1	1	1	1	1	2	2	2	2	2	2	2	2	2
	60 / 1524	1	1	1	1	1	1	1	1	1	1	1	2	2	2	2	2	2	2	2	2	2

Flex-Lag® Toolbox

ORDERING NUMBER	DESCRIPTION	ITEM CODE	WT. (LBS)
LAGGING-TB	with Power Tools	79080	32.0
LAGGING-TB2	without Power Tools	79099	20.0

Both Include:

- 25-ft measuring tape
- BCP location tool
- Chalk line
- Paint brushes (3)
- Lagging stitchers (3)
- White paint marker
- HD knife and replacement blades
- Bench brush
- Deadblow hammer

LAGGING-TB Also Includes:

- Air hammer kit
- 24-grit flap disc
- Rubber buffing disc
- Grinder
- Metal grinding disc
- Oscillating tool and accessories

Product Ordering Information

Strips Required = Pulley Diameter (in) ÷ 2, then round down.

Strip Selection Chart

PULLEY DIAMETER		STRIPS REQUIRED
in.	mm	
16	400	8
18	450	9
24	600	12
30	750	15
36	900	18
42	1050	21
48	1200	24
54	1350	27
60	1500	30
72	1800	36

Flex-Lag® Weld-on Diamond Lagging

SBR Rubber
Pulley Diameter 16" - 29" (400 - 725 mm)

BELT WIDTH		STRIP LENGTH		ORDERING NUMBER	ITEM CODE
in.	mm	in.	mm		
18	450	20	500	WND18-16	72169
24	600	26	650	WND24-16	72171
30	750	32	800	WND30-16	72173
36	900	38	950	WND36-16	72175
42	1050	44	1100	WND42-16	72177
48	1200	51	1275	WND48-16	72179
54	1350	57	1425	WND54-16	72181
60	1500	63	1575	WND60-16	72183
72	1800	75	1875	WND72-16	72185

SBR Rubber
Pulley Diameter 30" + (750 mm+)

BELT WIDTH		STRIP LENGTH		ORDERING NUMBER	ITEM CODE
in.	mm	in.	mm		
18	450	20	500	WND18-30	72170
24	600	26	650	WND24-30	72172
30	750	32	800	WND30-30	72174
36	900	38	950	WND36-30	72176
42	1050	44	1100	WND42-30	72178
48	1200	51	1275	WND48-30	72180
54	1350	57	1425	WND54-30	72182
60	1500	63	1575	WND60-30	72184
72	1800	75	1875	WND72-30	72186

FRAS Rubber
Pulley Diameter 16" - 29" (400 - 725 mm)

BELT WIDTH		STRIP LENGTH		ORDERING NUMBER	ITEM CODE
in.	mm	in.	mm		
18	450	20	500	WFRD18-16	72187
24	600	26	650	WFRD24-16	72189
30	750	32	800	WFRD30-16	72191
36	900	38	950	WFRD36-16	72193
42	1050	44	1100	WFRD42-16	72195
48	1200	51	1275	WFRD48-16	72197
54	1350	57	1425	WFRD54-16	72199
60	1500	63	1575	WFRD60-16	72201
72	1800	75	1875	WFRD72-16	72203

FRAS Rubber
Pulley Diameter 30" + (750 mm+)

BELT WIDTH		STRIP LENGTH		ORDERING NUMBER	ITEM CODE
in.	mm	in.	mm		
18	450	20	500	WFRD18-30	72188
24	600	26	650	WFRD24-30	72190
30	750	32	800	WFRD30-30	72192
36	900	38	950	WFRD36-30	72194
42	1050	44	1100	WFRD42-30	72196
48	1200	51	1275	WFRD48-30	72198
54	1350	57	1425	WFRD54-30	72200
60	1500	63	1575	WFRD60-30	72202
72	1800	75	1875	WFRD72-30	72204

FRAS (Fire Resistant Anti Static) MSHA Certification # - MSHA NO. IC-190

Product Ordering Information

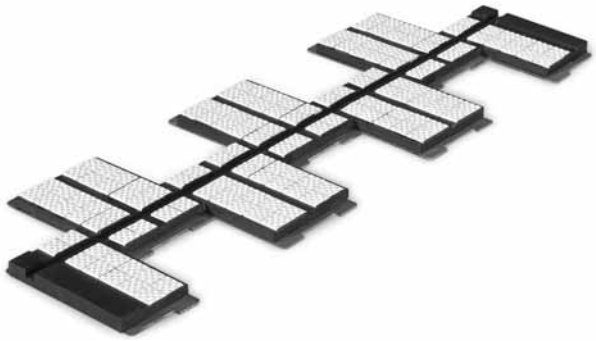

Strips Required = Pulley Diameter (in) ÷ 2, then round down.

Strip Selection Chart

PULLEY DIAMETER		STRIPS REQUIRED
in.	mm	
16	400	8
18	450	9
24	600	12
30	750	15
36	900	18
42	1050	21
48	1200	24
54	1350	27
60	1500	30
72	1800	36

Flex-Lag® Weld-on Full Ceramic Lagging

SBR Rubber
Pulley Diameter 16" - 29" (400 - 725 mm)

BELT WIDTH		STRIP LENGTH		ORDERING NUMBER	ITEM CODE
in.	mm	in.	mm		
18	450	20	500	WCLN18-16	71131
24	600	26	650	WCLN24-16	71132
30	750	32	800	WCLN30-16	71133
36	900	38	950	WCLN36-16	71135
42	1050	44	1100	WCLN42-16	71137
48	1200	51	1275	WCLN48-16	71139
54	1350	57	1425	WCLN54-16	71149
60	1500	63	1575	WCLN60-16	71165
72	1800	75	1875	WCLN72-16	71151

SBR Rubber
Pulley Diameter 30" + (750 mm+)

BELT WIDTH		STRIP LENGTH		ORDERING NUMBER	ITEM CODE
in.	mm	in.	mm		
24	600	26	650	WCLN24-30	71150
30	750	32	800	WCLN30-30	71134
36	900	38	950	WCLN36-30	71136
42	1050	44	1100	WCLN42-30	71138
48	1200	51	1275	WCLN48-30	71144
54	1350	57	1425	WCLN54-30	71145
60	1500	63	1575	WCLN60-30	71146
72	1800	75	1875	WCLN72-30	71147

Index *by Item Code*

ITEM CODE	ORDERING NUMBER	PAGE	ITEM CODE	ORDERING NUMBER	PAGE	ITEM CODE	ORDERING NUMBER	PAGE	ITEM CODE	ORDERING NUMBER	PAGE
04140	DRIVE HANDLE 900	246	62052	CLMN450/18-15S	248	71138	WCLN42-30	252	73063	HSA8L	85
04143	900936	246	62053	CLMN600/24-15S	248	71139	WCLN48-16	252	73063	HSA8L	87
04144	900948	246	62054	CLMN750/30-15S	248	71140	FLM-PC	241	73063	HSA8L	165
04145	900960	246	62055	CLMN900/36-15S	248	71141	FL-CP-I	241	73064	HSA8LL	83
04146	900972	246	62056	CLMN1050/42-15S	248	71141	FL-CP-I	241	73064	HSA8LL	85
04147	900984	246	62057	CLMN1200/48-15S	248	71144	WCLN48-30	252	73064	HSA8LL	87
04149	900CBK	246	62058	CLMN1350/54-15S	248	71145	WCLN54-30	252	73064	HSA8LL	165
04200	900924	246	62059	CLMN1500/60-15S	248	71146	WCLN60-30	252	73131	CBV-XS	182
30001	EBC1	246	62060	CLMN1800/72-15S	248	71147	WCLN72-30	252	73132	CBV-S	182
30002	EBC2	246	62061	CLMN2100/84-15S	248	71149	WCLN54-16	252	73133	CBV-M	182
30003	EBC1-B	246	62063	CLMFR450/18-15S	248	71150	WCLN24-30	252	73134	CBV-L	182
30004	EBC2-B	246	62064	CLMFR600/24-15S	248	71151	WCLN72-16	252	73156	PSA150	101
30005	EBC1-DR	246	62065	CLMFR750/30-15S	248	71152	25ND6.5/21	247	73156	PSA150	104
30006	EBC2-DR	246	62066	CLMFR900/36-15S	248	71155	12NDC6.5/21	247	73156	PSA150	123
30007	EBC-EB	246	62067	CLMFR1050/42-15S	248	71159	12FRDC6.5/21	247	73156	PSA150	126
30008	EBC-H	246	62068	CLMFR1200/48-15S	248	71163	25NP6.5/21	247	73163	RBPRET	218
30011	EBC1-220	246	62069	CLMFR1350/54-15S	248	71164	FL-CP-ISS	241	73163	RBPRET	225
30012	EBC2-220	246	62070	CLMFR1500/60-15S	248	71165	WCLN60-16	252	73190	VBK-XS	182
30013	EBC1-220-DR	246	62071	CLMFR1800/72-15S	248	71168	FL-PC-ISS	241	73190	VBK-XS	185
30014	EBC2-220-DR	246	62072	CLMFR2100/84-15S	248	72129	20FRP6.5/21	247	73191	VBK-S	182
30016	EBC1CLPG	246	62216	CLMN6.5/21-15	247	72169	WND18-16	251	73191	VBK-S	185
30017	EBC2CLPG	246	70186	FL-ACT	250	72170	WND18-30	251	73192	VBK-M	182
30018	CEBC1	246	70189	FL-PR-0.75	250	72171	WND24-16	251	73192	VBK-M	185
30019	CEBC2	246	71002	10ND6.5/21	247	72172	WND24-30	251	73193	VBK-L	182
30021	CEBC1-220	246	71004	12ND6.5/21	247	72173	WND30-16	251	73193	VBK-L	185
30022	CEBC2-220	246	71005	CLFR1200/48-12	249	72174	WND30-30	251	73399	VMBK	185
30024	EBC/CEBC-BK	246	71006	15ND6.5/21	247	72175	WND36-16	251	73400	VPXS	185
30031	CEBC1CPLG	246	71008	20ND6.5/21	247	72176	WND36-30	251	73408	VPS	185
30032	CEBC2CLPG	246	71009	CLFR1520/60.8-12	249	72177	WND42-16	251	73409	VPM	185
30033	EBC1-RK	246	71010	10NP6.5/21	247	72178	WND42-30	251	73410	VPL	185
30034	EBC2-RK	246	71012	12NP6.5/21	247	72179	WND48-16	251	73438	PV72	101
30040	CEBC2-DR18V	246	71014	10FRD6.5/21	247	72180	WND48-30	251	73533	VCS	185
30052	LSHDPP	246	71015	15FRP6.5/21	247	72181	WND54-16	251	73535	VMFXS	185
30373	LSHDCBS	246	71016	12FRD6.5/21	247	72182	WND54-30	251	73549	VMFS	185
30390	LSHD-RPK	246	71017	15NP6.5/21	247	72183	WND60-16	251	73626	PHA	104
30392	LSHDS	246	71018	15FRD6.5/21	247	72184	WND60-30	251	73626	PHA	126
30393	LSHD30	246	71019	20FRD6.5/21	247	72185	WND72-16	251	73628	RSA150	105
30394	LSHD36	246	71020	10FRP6.5/21	247	72186	WND72-30	251	73628	RSA150	107
30395	LSHD42	246	71021	20NP6.5/21	247	72187	WFRD18-16	251	73628	RSA150	108
30396	LSHD48	246	71022	12FRP6.5/21	247	72188	WFRD18-30	251	73628	RSA150	109
30397	LSHD54	246	71039	CLN1200/48-12	249	72189	WFRD24-16	251	73628	RSA150	111
30398	LSHD60	246	71042	CLN1800/72-12	249	72190	WFRD24-30	251	73628	RSA150	112
30399	LSHD72	246	71044	CLN2100/84-12	249	72191	WFRD30-16	251	73628	RSA150	113
30400	LSHDLP	246	71052	FLSC-I	241	72192	WFRD30-30	251	73628	RSA150	114
30408	LSHDB72-2	246	71054	FLSC-I-50	241	72193	WFRD36-16	251	73628	RSA150	115
30414	LSHDB36-2	246	71055	FLSCM-I	241	72194	WFRD36-30	251	73628	RSA150	116
30418	LSHDB30-2	246	71057	FL-PC-I	241	72195	WFRD42-16	251	73628	RSA150	120
30421	LSHDB42-2	246	71058	FL-RPI	241	72196	WFRD42-30	251	73628	RSA150	122
30423	LSHDB48-2	246	71058	FL-RPI	241	72197	WFRD48-16	251	73628	RSA150	127
30424	LSHDB54-2	246	71060	FL-RBI	241	72198	WFRD48-30	251	73628	RSA150	130
30430	LSHDB60-2	246	71060	FL-RBI	241	72199	WFRD54-16	251	73628	RSA150	131
37043	CEBC1-DRNS4A	246	71076	7.5WLD3.3/11	247	72200	WFRD54-30	251	73628	RSA150	134
37076	CEBC1/CEBC2-BAT4A	246	71077	7.5NLD3.3/11	247	72201	WFRD60-16	251	73631	HVPT	85
37447	CEBC1/CEBC2-BAT5A	246	71079	CLFR1800/72-12	249	72202	WFRD60-30	251	73631	HVPT	87
61294	CLMN450/18-15	248	71082	CLFR2100/84-12	249	72203	WFRD72-16	251	73631	HVPT	165
61295	CLMN600/24-15	248	71100	FLSCM-I-50	241	72204	WFRD72-30	251	74037	VMFM	185
61296	CLMN750/30-15	248	71111	CLN460/18.4-12	249	73017	PP72	104	74038	VMFL	185
61297	CLMN900/36-15	248	71112	CLN600/24-12	249	73024	PPS6	104	74100	HW-BC	164
61298	CLMN1050/42-15	248	71113	CLN760/30.4-12	249	73047	HSA8SS	83	74141	HTTS	164
61299	CLMN1200/48-15	248	71115	CLN900/36-12	249	73047	HSA8SS	85	74307	HXF8SS	81
61300	CLMN1350/54-15	248	71116	CLN1060/42.4-12	249	73047	HSA8SS	87	74307	HXF8SS	165
61301	CLMN1500/60-15	248	71118	CLFR460/18.4-12	249	73047	HSA8SS	88	74313	STKHSS	165
61302	CLMN1800/72-15	248	71119	CLFR600/24-12	249	73047	HSA8SS	165	74316	STKHSD	165
61303	CLMN2100/84-15	248	71120	CLFR760/30.4-12	249	73048	HSA8S	83	74389	CBV-72	182
61308	CLMFR450/18-15	248	71122	CLFR900/36-12	249	73048	HSA8S	85	74390	CBV-84	182
61309	CLMFR600/24-15	248	71123	CLFR1060/42.4-12	249	73048	HSA8S	87	74391	CBV-96	182
61310	CLMFR750/30-15	248	71126	CLN1360/54.4-12	249	73048	HSA8S	88	74395	VP72	185
61311	CLMFR900/36-15	248	71127	CLN1520/60.8-12	249	73048	HSA8S	165	74396	VP84	185
61312	CLMFR1050/42-15	248	71131	WCLN18-16	252	73049	HSA8M	83	74397	VP96	185
61313	CLMFR1200/48-15	248	71132	WCLN24-16	252	73049	HSA8M	85	74398	VMF72	185
61314	CLMFR1350/54-15	248	71133	WCLN30-16	252	73049	HSA8M	87	74399	VMF84	185
61315	CLMFR1500/60-15	248	71134	WCLN30-30	252	73049	HSA8M	88	74417	STJK	19
61316	CLMFR1800/72-15	248	71135	WCLN36-16	252	73049	HSA8M	165	74417	STJK	137
61317	CLMFR2100/84-15	248	71136	WCLN36-30	252	73050	HPS8	165	74417	STJK	165
61319	CLMFR6.5/21-15	247	71137	WCLN42-16	252	73063	HSA8L	83	74419	STTS	19

Index *by Item Code*

ITEM CODE	ORDERING NUMBER	PAGE
74419	STTS	137
74419	STTS	165
74440	VMF96	185
74448	UFB18	135
74449	UFB24	135
74450	UFB30	135
74451	UFB36	135
74452	UFB42	135
74453	UFB48	135
74454	UFB54	135
74455	UFB60	135
74456	UFB72	135
74457	VBK-72	182
74457	VBK-72	185
74458	VBK-84	182
74458	VBK-84	185
74459	VBK-96	182
74459	VBK-96	185
74460	UFB84	135
74502	HDTS	19
74502	HDTS	137
74502	HDTS	165
74504	STKD	165
74505	STKS	165
74534	ISC	166
74535	ICT6	89
74535	ICT6	90
74535	ICT6	92
74535	ICT6	101
74535	ICT6	102
74535	ICT6	104
74535	ICT6	105
74535	ICT6	107
74535	ICT6	108
74535	ICT6	109
74535	ICT6	111
74535	ICT6	112
74535	ICT6	113
74535	ICT6	114
74535	ICT6	116
74535	ICT6	120
74535	ICT6	122
74535	ICT6	123
74535	ICT6	126
74535	ICT6	127
74535	ICT6	130
74535	ICT6	131
74535	ICT6	134
74535	ICT6	166
74550	HDARK	165
74558	RBP1S-S	216
74559	RBP1S-M	216
74560	RBP1S-L	216
74561	RBP1S-XL	216
74562	RBPSR-S	218
74563	RBPSR-M	218
74564	RBPSR-L	218
74565	RBPSR-XL	218
74566	PC18	101
74567	PC24	101
74568	PC30	101
74569	PC36	101
74570	PC42	101
74571	PC48	101
74572	PC54	101
74573	PC60	101
74574	PC72	101
74612	RP-72	107
74618	RC18	105
74619	RC24	105
74620	RC30	105
74621	RC36	105
74622	RC42	105
74623	RC48	105
74624	RC54	105
74625	RC60	105
74626	RC72	105
74641	RV-72	105
74689	HXF8S	81
74689	HXF8S	165
74690	HXF8M	81
74690	HXF8M	165
74691	HXF8L	81
74691	HXF8L	165
74692	RDP1-S	183
74693	RDP1-M	183
74694	RDP1-L	183
74695	RDP1-XL	183
74698	RDPMBK	185
74699	RDPBK-S	183
74699	RDPBK-S	185
74700	RDPBK-M	183
74700	RDPBK-M	185
74701	RDPBK-L	183
74701	RDPBK-L	185
74702	RDPBK-XL	183
74702	RDPBK-XL	185
74705	RDPMSK	185
74709	SPK18	159
74710	SPK24	159
74711	SPK30	159
74712	SPK36	159
74713	SPK42	159
74714	SPK48	159
74715	SPK54	159
74716	SPK60	159
74717	SPK72	159
74718	SPKHD72	159
74719	SPKHD84	159
74720	SPKHD96	159
74721	SPKHD120	159
74734	SPCP	159
74734	SPCP	160
74742	SPBV	159
74743	SPYS	159
74744	SPPR	159
74745	SPH10	159
74746	SPN	159
74747	SPG	159
74748	SPPN	159
74771	HSSTS	87
74771	HSSTS	165
74772	HSSCS	87
74772	HSSCS	165
74773	PSSS	104
74773	PSSS	111
74773	PSSS	112
74773	PSSS	116
74773	PSSS	120
74773	PSSS	122
74774	ELT	164
74775	STJM	19
74775	STJM	137
74775	STJM	165
74776	HBTK	165
74821	HTV18SS	88
74822	HTV24SS	88
74823	HTV30SS	88
74824	HTV36SS	88
74825	HTV42SS	88
74826	HTV48SS	88
74828	HTV18S	88
74829	HTV24S	88
74830	HTV30S	88
74831	HTV36S	88
74832	HTV42S	88
74833	HTV48S	88
74838	HTV36M	88
74839	HTV42M	88
74840	HTV48M	88
74885	PTM30T	227
74886	PTM36T	227
74887	PTM42T	227
74888	PTM48T	227
74889	PTM54T	227
74890	PTM60T	227
74891	PTMHD54T	227
74892	PTMHD60T	227
74893	PTMHD72T	227
74894	PTMHD84T	227
74895	PTMSD72T	227
74896	PTMSD84T	227
74897	PTMSD96T	227
74898	PTMSD120T	227
74899	PTM30R	227
74900	PTM36R	227
74901	PTM42R	227
74902	PTM48R	227
74903	PTM54R	227
74904	PTM60R	227
74905	PTMHD54R	227
74906	PTMHD60R	227
74907	PTMHD72R	227
74908	PTMHD84R	227
74909	PTMSD72R	227
74910	PTMSD84R	227
74911	PTMSD96R	227
74912	PTMSD120R	227
74914	MSR	231
74915	MSRSD	231
74916	PMSMK	231
74917	PMSMKSD	231
74918	MAK	231
74919	MAKHD	231
74920	MAKSD	231
74921	MORK	231
74921	MORK	232
74922	MORKSD	231
74922	MORKSD	232
74923	MCRK	230
74923	MCRK	231
74923	MCRK	232
74924	MCRKSD	231
74924	MCRKSD	232
74925	MCB	230
74925	MCB	231
74925	MCB	232
74926	MCBSD	231
74926	MCBSD	232
74927	MCSK	230
74927	MCSK	231
74927	MCSK	232
74928	MCSKHD	230
74928	MCSKHD	231
74928	MCSKHD	232
74929	MCSKSD	231
74929	MCSKSD	232
74930	MCS	230
74930	MCS	231
74930	MCS	232
74931	MCSHD	230
74931	MCSHD	231
74931	MCSHD	232
74932	MCSSD	231
74932	MCSSD	232
74941	SRBK	162
74952	SPKHD42	159
74953	SPKHD48	159
74954	SPKHD54	159
74955	SPKHD60	159
74982	VMLK	185
74983	VSC	185
75017	FL-ADH-0.8	250
75419	HVT8-S/S	83
75419	HVT8-S/S	87
75419	HVT8-S/S	88
75419	HVT8-S/S	165
75513	PAB	92
75513	PAB	104
75513	PAB	107
75513	PAB	126
75513	PAB	130
75513	PAB	148
75513	PAB	166
75522	RBPFK-S	218
75523	RBPFK-M	218
75524	RBPFK-L	218
75525	RBPFK-XL	218
75526	RBPMBK	218
75527	RBPIT-S	218
75528	RBPIT-M	218
75529	RBPIT-L	218
75530	RBPIT-XL	218
75531	MFASK	231
75565	HSA8SSS	165
75566	RDPF-S	185
75567	RDPF-M	185
75568	RDPF-L	185
75569	RDPF-XL	185
75570	VUBK-XS	182
75571	VUBK-S	182
75572	VUBK-M	182
75573	VUBK-L	182
75574	VUBK-72	182
75575	VUBK-84	182
75576	VUBK-96	182
75578	SPMK2	159
75579	SPMK3	159
75583	PTM24T	227
75584	PTM24R	227
75588	PLSC18	102
75589	PLSC24	102
75590	PLSC30	102
75591	PLSC36	102
75592	PLSC42	102
75593	PLSC48	102
75594	PLSC54	102
75595	PLSP18	104
75596	PLSP24	104
75597	PLSP30	104
75598	PLSP36	104
75599	PLSP42	104
75600	PLSP48	104
75601	PLSP54	104
75610	EZP1-212	11
75611	EZP1-218	11
75612	EZP1-224	11
75613	EZP1-230	11
75614	EZP1-236	11
75615	EZP1-242	11
75616	EZP1-248	11
75617	EZP1-254	11
75618	EZP1-260	11
75619	EZP1P12	19
75619	EZP1P12	20
75620	EZP1P18	19
75620	EZP1P18	20
75621	EZP1P24	19
75621	EZP1P24	20
75622	EZP1P30	19
75622	EZP1P30	20
75623	EZP1P36	19
75623	EZP1P36	20
75624	EZP1P42	19
75624	EZP1P42	20
75625	EZP1P48	19
75625	EZP1P48	20
75626	EZP1P54	19
75626	EZP1P54	20
75627	EZP1P60	19

Index *by Item Code*

ITEM CODE	ORDERING NUMBER	PAGE
75627	EZP1P60	20
75628	CRB10	16
75628	CRB10	22
75628	CRB10	37
75628	CRB10	169
75629	CRB16	16
75629	CRB16	22
75629	CRB16	37
75629	CRB16	169
75630	CRB22	16
75630	CRB22	22
75630	CRB22	37
75630	CRB22	169
75631	CRB28	16
75631	CRB28	22
75631	CRB28	37
75631	CRB28	169
75632	CRB34	16
75632	CRB34	22
75632	CRB34	37
75632	CRB34	169
75633	CRB40	16
75633	CRB40	22
75633	CRB40	37
75633	CRB40	169
75634	CRB46	16
75634	CRB46	22
75634	CRB46	37
75634	CRB46	169
75635	CRB52	16
75635	CRB52	22
75635	CRB52	37
75635	CRB52	169
75636	CRB58	16
75636	CRB58	22
75636	CRB58	37
75636	CRB58	169
75637	EZP1MPK	19
75641	EZP1PL	19
75641	EZP1PL	20
75641	EZP1PL	165
75642	EZP1BP	19
75642	EZP1BP	20
75642	EZP1BP	169
75642	EZP1BP	173
75642	EZP1BP	174
75643	EZS2-18	89
75644	EZS2-24	89
75645	EZS2-30	89
75646	EZS2-36	89
75647	EZS2-42	89
75648	EZS2-48	89
75649	EZS2-54	89
75650	EZS2-60	89
75651	EZS2-72	89
75652	EZS2P18	92
75652	EZS2P18	166
75653	EZS2P24	92
75653	EZS2P24	166
75654	EZS2P30	92
75654	EZS2P30	166
75655	EZS2P36	92
75655	EZS2P36	166
75656	EZS2P42	92
75656	EZS2P42	166
75657	EZS2P48	92
75657	EZS2P48	166
75658	EZS2P54	92
75658	EZS2P54	166
75659	EZS2P60	92
75659	EZS2P60	166
75660	EZS2P72	92
75660	EZS2P72	166
75661	FFCK	92
75666	EZS2MBK	92
75666	EZS2MBK	104
75666	EZS2MBK	107
75666	EZS2MBK	126
75666	EZS2MBK	130
75666	EZS2MBK	148
75666	EZS2MBK	166
75771	EZP1-272	11
75772	EZP1P72	19
75772	EZP1P72	20
75773	CRB70	16
75773	CRB70	22
75773	CRB70	37
75773	CRB70	169
75774	EZP1-872	11
75775	CRB64	16
75775	CRB64	22
75775	CRB64	37
75778	FLSC-ISS	241
75779	EZP1-818	11
75780	EZP1-824	11
75781	EZP1-830	11
75782	EZP1-836	11
75783	EZP1-842	11
75784	EZP1-848	11
75785	EZP1-854	11
75786	EZP1-860	11
75787	MSP-224	34
75788	MSP-230	34
75789	MSP-236	34
75790	MSP-242	34
75791	MSP-248	34
75792	MSP-254	34
75793	MSP-260	34
75794	MSP-272	34
75795	MSP-824	34
75796	MSP-830	34
75797	MSP-836	34
75798	MSP-842	34
75799	MSP-848	34
75800	MSP-854	34
75801	MSP-860	34
75802	MSP-872	34
75803	MSPP24	39
75804	MSPP30	39
75804	MSPP30	141
75805	MSPP36	39
75805	MSPP36	141
75806	MSPP42	39
75806	MSPP42	141
75807	MSPP48	39
75807	MSPP48	141
75808	MSPP54	39
75808	MSPP54	141
75809	MSPP60	39
75809	MSPP60	141
75810	MSPP72	39
75811	MSPMPK	39
75811	MSPMPK	47
75811	MSPMPK	54
75811	MSPMPK	80
75811	MSPMPK	87
75816	MSPPL	39
75816	MSPPL	80
75816	MSPPL	87
75817	RMC1	240
75819	RMC1-CP	240
75820	RMC1-CB	240
75820	RMC1-CB	243
75820	RMC1-CB	244
75821	RMC1-PL	240
75830	MMBK	34
75830	MMBK	41
75830	MMBK	49
75830	MMBK	50
75830	MMBK	55
75830	MMBK	62
75830	MMBK	63
75830	MMBK	69
75830	MMBK	155
75831	MSPBPK	39
75831	MSPBPK	141
75832	RMC1-PP	240
75833	RMC1-50	240
75834	RMC1-LS	240
75835	RMC1LS-PL	240
75836	RMC1-LSPP	240
75843	STS-S	100
75843	STS-S	111
75843	STS-S	112
75843	STS-S	120
75843	STS-S	121
75843	STS-S	141
75843	STS-S	151
75844	STS-B	100
75844	STS-B	111
75844	STS-B	112
75844	STS-B	120
75844	STS-B	121
75844	STS-B	141
75844	STS-B	151
75845	QMTS-P	19
75845	QMTS-P	39
75845	QMTS-P	47
75845	QMTS-P	54
75845	QMTS-P	80
75845	QMTS-P	87
75845	QMTS-P	137
75846	STS-W	111
75846	STS-W	112
75846	STS-W	120
75846	STS-W	121
75846	STS-W	141
75846	STS-W	151
75847	STAK	120
75847	STAK	122
75847	STAK	134
75847	STAK	141
75868	MDWS-24	138
75869	MDWS-30	138
75870	MDWS-36	138
75871	MDWS-42	138
75872	MDWS-48	138
75873	MDWS-54	138
75874	MDWS-60	138
75875	MDWS-72	138
75883	DWP-72	141
75884	CDWB24	138
75885	CDWB30	138
75886	CDWB36	138
75887	CDWB42	138
75888	CDWB48	138
75889	CDWB54	138
75890	CDWB60	138
75891	CDWB72	138
75892	STAKHD	120
75892	STAKHD	122
75892	STAKHD	134
75892	STAKHD	141
75896	PSTA	39
75896	PSTA	47
75896	PSTA	54
75896	PSTA	61
75896	PSTA	68
75896	PSTA	73
75896	PSTA	80
75896	PSTA	87
75896	PSTA	137
75897	PTPK	61
75897	PTPK	68
75897	PTPK	73
75898	PSTS-W	39
75898	PSTS-W	47
75898	PSTS-W	54
75898	PSTS-W	61
75898	PSTS-W	68
75898	PSTS-W	73
75898	PSTS-W	80
75898	PSTS-W	87
75898	PSTS-W	137
75899	PSTS-S	47
75899	PSTS-S	54
75899	PSTS-S	61
75899	PSTS-S	68
75899	PSTS-S	73
75899	PSTS-S	80
75899	PSTS-S	87
75901	HFC2	87
75901	HFC2	165
75902	HXFC2	87
75902	HXFC2	165
75905	AWTB	47
75905	AWTB	54
75905	AWTB	61
75905	AWTB	68
75905	AWTB	73
75906	AWTMB	47
75906	AWTMB	54
75906	AWTMB	61
75906	AWTMB	68
75906	AWTMB	73
75907	AWTA	47
75907	AWTA	54
75907	AWTA	61
75907	AWTA	68
75907	AWTA	73
75909	AWTHK	47
75909	AWTHK	54
75909	AWTHK	61
75909	AWTHK	68
75909	AWTHK	73
75910	MHS-24	114
75911	MHS-30	114
75912	MHS-36	114
75913	MHS-42	114
75914	MHS-48	114
75915	MHS-54	114
75916	MHS-60	114
75917	MHS-72	114
75918	MHSP-24	111
75918	MHSP-24	112
75918	MHSP-24	120
75919	MHSP-30	111
75919	MHSP-30	112
75919	MHSP-30	120
75920	MHSP-36	111
75920	MHSP-36	112
75920	MHSP-36	120
75921	MHSP-42	111
75921	MHSP-42	112
75921	MHSP-42	120
75922	MHSP-48	111
75922	MHSP-48	112
75922	MHSP-48	120
75923	MHSP-54	111
75923	MHSP-54	112
75923	MHSP-54	120
75924	MHSP-60	111
75924	MHSP-60	112
75924	MHSP-60	120
75925	MHSP-72	111
75925	MHSP-72	112
75925	MHSP-72	120
75927	PFC	120
75927	PFC	134
75929	MHCP-24S	69

Index *by Item Code*

ITEM CODE	ORDERING NUMBER	PAGE	ITEM CODE	ORDERING NUMBER	PAGE	ITEM CODE	ORDERING NUMBER	PAGE	ITEM CODE	ORDERING NUMBER	PAGE
75930	MHCP-30S	69	76036	RBAS4-42	176	76098	QMTBK-W	54	76252	HV-42L	83
75931	MHCP-36S	69	76037	RBAS4-48	176	76098	QMTBK-W	61	76253	HV-42LL	83
75932	MHCP-42S	69	76038	RBAS4-54	176	76098	QMTBK-W	68	76254	HV-48S	83
75933	MHCP-48S	69	76039	RBAS4-60	176	76098	QMTBK-W	73	76255	HV-48M	83
75934	MHCP-54S	69	76040	RBAS4-72	176	76098	QMTBK-W	80	76256	HV-48L	83
75935	MHCP-60S	69	76041	RBAER-10	177	76098	QMTBK-W	87	76257	HV-48LL	83
75936	MHCP-72S	69	76042	RBAER-16	177	76098	QMTBK-W	137	76258	HV-54M	83
75945	MHCP-BPA24	71	76043	RBAER-22	177	76099	QMTPSBK	39	76259	HV-54L	83
75946	MHCP-BPA30	71	76044	RBAER-28	177	76099	QMTPSBK	47	76260	HV-54LL	83
75947	MHCP-BPA36	71	76045	RBAER-34	177	76099	QMTPSBK	54	76261	HV-60M	83
75948	MHCP-BPA42	71	76046	RBAER-40	177	76099	QMTPSBK	80	76262	HV-60L	83
75949	MHCP-BPA48	71	76047	RBAER-46	177	76099	QMTPSBK	87	76263	HV-60LL	83
75950	MHCP-BPA54	71	76048	RBAER-52	177	76099	QMTPSBK	137	76264	HV-72M	83
75951	MHCP-BPA60	71	76049	RBAER-58	177	76101	HV-18SS	83	76265	HV-72L	83
75952	MHCP-BPA72	71	76050	RBAER-70	177	76102	HV-24SS	83	76266	HV-72LL	83
75953	MHCP-BCK24	71	76069	AWTNCB	47	76103	HV-30SS	83	76267	HVP-18M	85
75954	MHCP-BCK30	71	76069	AWTNCB	54	76104	HV-36SS	83	76268	HVP-18L	85
75955	MHCP-BCK36	71	76069	AWTNCB	61	76105	HV-42SS	83	76269	HVP-24M	85
75956	MHCP-BCK42	71	76069	AWTNCB	68	76106	HV-48SS	83	76270	HVP-24L	85
75957	MHCP-BCK48	71	76069	AWTNCB	73	76107	HV-54S	83	76271	HVP-30M	85
75958	MHCP-BCK54	71	76071	SSTSMB	109	76108	HV-60S	83	76272	HVP-30L	85
75959	MHCP-BCK60	71	76071	SSTSMB	114	76109	HV-72S	83	76273	HVP-36M	85
75960	MHCP-BCK72	71	76071	SSTSMB	138	76110	H78P18	87	76274	HVP-36L	85
75961	MHP-CP24	73	76071	SSTSMB	155	76111	H78P24	87	76275	HVP-42M	85
75962	MHP-CP30	73	76072	SSTLMB	109	76112	H78P30	87	76276	HVP-42L	85
75963	MHP-CP36	73	76072	SSTLMB	114	76113	H78P36	87	76277	HVP-48M	85
75964	MHP-CP42	73	76072	SSTLMB	138	76114	H78P42	87	76278	HVP-48L	85
75965	MHP-CP48	73	76072	SSTLMB	155	76115	H78P48	87	76279	HVP-48LL	85
75966	MHP-CP54	73	76073	SSTOTA	114	76116	H78P54	87	76280	HVP-54M	85
75967	MHP-CP60	73	76073	SSTOTA	138	76117	H78P60	87	76281	HVP-54L	85
75968	MHP-CP72	73	76073	SSTOTA	155	76118	H78P72	87	76282	HVP-54LL	85
75978	SSRB	73	76074	QMT-P	39	76124	HVP-18S	85	76283	HVP-60M	85
75979	HXF2-SS	81	76074	QMT-P	47	76125	HVP-24S	85	76284	HVP-60L	85
75979	HXF2-SS	87	76074	QMT-P	54	76126	HVP-30S	85	76285	HVP-60LL	85
75979	HXF2-SS	165	76074	QMT-P	80	76127	HVP-36S	85	76286	HVP-72M	85
75980	HXF2-S	81	76074	QMT-P	87	76128	HVP-42S	85	76287	HVP-72L	85
75980	HXF2-S	87	76075	QMT-W	39	76129	HVP-48S	85	76288	HVP-72LL	85
75980	HXF2-S	165	76075	QMT-W	47	76130	HVP-54S	85	76289	HXF2-18S	81
75981	HXF2-M	81	76075	QMT-W	54	76131	HVP-60S	85	76290	HXF2-18M	81
75981	HXF2-M	87	76075	QMT-W	80	76132	HVP-72S	85	76291	HXF2-24S	81
75981	HXF2-M	165	76075	QMT-W	87	76138	HXF2-18SS	81	76292	HXF2-24M	81
75982	HXF2-L	81	76083	SATB	121	76139	HXF2-24SS	81	76293	HXF2-30S	81
75982	HXF2-L	87	76083	SATB	141	76140	HXF2-30SS	81	76294	HXF2-30M	81
75982	HXF2-L	165	76083	SATB	151	76141	HXF2-36SS	81	76295	HXF2-36S	81
75985	RBQC1HD-12	170	76084	SATHB	121	76142	HXF2-42SS	81	76296	HXF2-36M	81
75986	RBQC1HD-18	170	76084	SATHB	141	76143	HXF2-48SS	81	76297	HXF2-36L	81
75987	RBQC1HD-24	170	76084	SATHB	151	76144	HXF2-54SS	81	76298	HXF2-42S	81
75988	RBQC1HD-30	170	76085	HTS18	90	76145	HXF2-60S	81	76299	HXF2-42M	81
75989	RBQC1HD-36	170	76086	HTS24	90	76146	HXF2-72S	81	76300	HXF2-42L	81
75990	RBQC1HD-42	170	76087	HTS30	90	76169	MHS-18V	114	76301	HXF2-48S	81
75991	RBQC1HD-48	170	76088	HTS36	90	76170	MHS-24V	114	76302	HXF2-48M	81
75992	RBQC1HD-54	170	76089	HTS42	90	76171	MHS-30V	114	76303	HXF2-48L	81
75993	RBQC1HD-66	170	76090	HTS48	90	76172	MHS-36V	114	76304	HXF2-54S	81
75995	RBAGS-16	173	76091	HTS54	90	76173	MHS-42V	114	76305	HXF2-54M	81
75996	RBAGS-22	173	76092	HTS60	90	76174	MHS-48V	114	76306	HXF2-54L	81
75997	RBAGS-28	173	76093	HTS72	90	76175	MHS-54V	114	76307	HXF2-60M	81
75998	RBAGS-34	173	76094	HTSCK	90	76176	MHS-60V	114	76308	HXF2-60L	81
75999	RBAGS-40	173	76094	HTSCK	92	76177	MHS-72V	114	76309	HXF2-72M	81
76024	MAPEK	155	76096	QMTPAK	39	76178	MHSP-18	111	76310	HXF2-72L	81
76025	MCBK	230	76096	QMTPAK	47	76178	MHSP-18	112	76392	MHP-EP	47
76025	MCBK	231	76096	QMTPAK	54	76178	MHSP-18	120	76392	MHP-EP	61
76025	MCBK	232	76096	QMTPAK	80	76190	HV-18S	83	76392	MHP-EP	73
76026	MCBKHD	230	76096	QMTPAK	87	76191	HV-18M	83	76392	MHP-EP	126
76026	MCBKHD	231	76096	QMTPAK	137	76192	HV-24S	83	76392	MHP-EP	130
76026	MCBKHD	232	76097	QMTBK-P	39	76193	HV-24M	83	76392	MHP-EP	134
76027	MCBKSD	231	76097	QMTBK-P	40	76194	HV-30S	83	76393	MHCP-CH	73
76027	MCBKSD	232	76097	QMTBK-P	47	76195	HV-30M	83	76394	MHCP-BS	73
76028	RBAGS-46	173	76097	QMTBK-P	48	76196	HV-36S	83	76399	HOBK	80
76029	RBAGS-52	173	76097	QMTBK-P	54	76197	HV-36M	83	76399	HOBK	87
76030	RBAGS-58	173	76097	QMTBK-P	80	76198	HV-36L	83	76403	EST-P	19
76031	RBAGS-70	173	76097	QMTBK-P	87	76199	HV-42S	83	76404	EST-S	19
76032	RBAS4-18	176	76098	QMTBK-W	39	76205	RVT6-S/S	122	76405	EST-B	19
76033	RBAS4-24	176	76098	QMTBK-W	40	76249	RSA	107	76406	ESTAK-EST	19
76034	RBAS4-30	176	76098	QMTBK-W	47	76249	RSA	130	76406	ESTAK-EST	137
76035	RBAS4-36	176	76098	QMTBK-W	48	76251	HV-42M	83	76407	ESPSBK	19

Index *by Item Code*

ITEM CODE	ORDERING NUMBER	PAGE
76408	ESPBK	19
76409	ESPRK	19
76409	ESPRK	137
76410	ESBK-PS	19
76410	ESBK-PS	137
76411	ESBK-B	19
76412	ESS-S	19
76412	ESS-S	137
76413	ESS-B	19
76414	RMC1-BCP	240
76415	RMC1-BPP	240
76415	RMC1-BPP	243
76415	RMC1-BPP	244
76416	VAK	185
76418	EZP1OTK1	19
76419	EZP1OTK2	19
76450	MMP-624	41
76451	MMP-630	41
76452	MMP-636	41
76453	MMP-642	41
76454	MMP-648	41
76455	MMP-654	41
76456	MMP-660	41
76457	MMP-672	41
76458	MMPCP24	47
76458	MMPCP24	61
76459	MMPCP30	47
76459	MMPCP30	61
76460	MMPCP36	47
76460	MMPCP36	61
76461	MMPCP42	47
76461	MMPCP42	61
76462	MMPCP48	47
76462	MMPCP48	61
76463	MMPCP54	47
76463	MMPCP54	61
76464	MMPCP60	47
76464	MMPCP60	61
76465	MMPCP72	47
76465	MMPCP72	61
76466	MMPBPK	47
76466	MMPBPK	54
76466	MMPBPK	172
76469	FL-M	245
76470	FL-L	245
76472	FLEL-M	245
76473	FLEL-L	245
76474	FLELP	245
76476	FLTW-M	245
76477	FLTW-L	245
76478	FLRP	245
76479	FLCP	245
76481	FLRLB-L	245
76482	FLRLB-M	245
76483	QMT-G	39
76483	QMT-G	47
76483	QMT-G	54
76484	QMTS-G	39
76484	QMTS-G	47
76484	QMTS-G	54
76485	TRB18	45
76485	TRB18	52
76485	TRB18	172
76486	TRB24	45
76486	TRB24	52
76486	TRB24	172
76487	TRB30	45
76487	TRB30	52
76487	TRB30	172
76488	TRB36	45
76488	TRB36	52
76488	TRB36	172
76489	TRB42	45
76489	TRB42	52
76489	TRB42	172

ITEM CODE	ORDERING NUMBER	PAGE
76490	TRB48	45
76490	TRB48	52
76490	TRB48	172
76491	TRB54	45
76491	TRB54	52
76491	TRB54	172
76492	TRB60	45
76492	TRB60	52
76492	TRB60	172
76493	TRB66	45
76493	TRB66	52
76493	TRB66	172
76494	TRB72	45
76494	TRB72	52
76494	TRB72	172
76537	MMPK	34
76537	MMPK	41
76537	MMPK	49
76537	MMPK	50
76537	MMPK	55
76537	MMPK	62
76537	MMPK	63
76537	MMPK	69
76537	MMPK	155
76538	RMC1-LSBPP	240
76540	QMTBK-G	39
76540	QMTBK-G	40
76540	QMTBK-G	47
76540	QMTBK-G	48
76540	QMTBK-G	54
76551	MMP-1230	41
76552	MMP-1236	41
76553	MMP-1242	41
76554	MMP-1248	41
76555	MMP-1254	41
76556	MMP-1260	41
76557	MMP-1272	41
76558	RMC2-FS-1	244
76559	RMC2-FSAPK	244
76560	PFC-SS	120
76560	PFC-SS	122
76570	RB6SA	178
76571	RB6DH	179
76572	RBAGSCM-16	174
76573	RBAGSCM-22	174
76574	RBAGSCM-28	174
76575	RBAGSCM-34	174
76576	RBAGSCM-40	174
76577	RBAGSCM-46	174
76578	RBAGSCM-52	174
76579	RBAGSCM-58	174
76581	RBAGSCM-70	174
76593	CRB-HT10	16
76593	CRB-HT10	22
76593	CRB-HT10	37
76594	CRB-HT16	16
76594	CRB-HT16	22
76594	CRB-HT16	37
76595	CRB-HT22	16
76595	CRB-HT22	22
76595	CRB-HT22	37
76596	CRB-HT28	16
76596	CRB-HT28	22
76596	CRB-HT28	37
76597	CRB-HT34	16
76597	CRB-HT34	22
76597	CRB-HT34	37
76598	CRB-HT40	16
76598	CRB-HT40	22
76598	CRB-HT40	37
76599	CRB-HT46	16
76599	CRB-HT46	22
76599	CRB-HT46	37
76600	CRB-HT52	16
76600	CRB-HT52	22

ITEM CODE	ORDERING NUMBER	PAGE
76600	CRB-HT52	37
76601	CRB-HT58	16
76601	CRB-HT58	22
76601	CRB-HT58	37
76602	CRB-HT64	16
76602	CRB-HT64	22
76602	CRB-HT64	37
76603	CRB-HT70	16
76603	CRB-HT70	22
76603	CRB-HT70	37
76613	MHS-24R	116
76614	MHS-30R	116
76615	MHS-36R	116
76616	MHS-42R	116
76617	MHS-48R	116
76618	MHS-54R	116
76619	MHS-60R	116
76620	MHS-72R	116
76621	MHS-84R	116
76622	PFRS	116
76622	PFRS	120
76622	PFRS	122
76622	PFRS	131
76636	SSTBK-W	112
76636	SSTBK-W	120
76636	SSTBK-W	122
76636	SSTBK-W	141
76636	SSTBK-W	151
76637	SSTBK-B	112
76637	SSTBK-B	120
76637	SSTBK-B	122
76637	SSTBK-B	141
76637	SSTBK-B	151
76638	MHCP-2BC24	73
76639	MHCP-2BC30	73
76640	MHCP-2BC36	73
76641	MHCP-2BC42	73
76642	MHCP-2BC48	73
76643	MHCP-2BC54	73
76644	MHCP-2BC60	73
76645	MHCP-2BC72	73
76646	MHS-18RV	116
76647	MHS-24RV	116
76648	MHS-30RV	116
76649	MHS-36RV	116
76650	MHS-42RV	116
76651	MHS-48RV	116
76652	MHS-54RV	116
76653	MHS-60RV	116
76654	MHS-72RV	116
76655	RBAER-44	177
76658	HTF212	13
76659	HTF218	13
76660	HTF224	13
76661	HTF230	13
76662	HTF236	13
76663	HTF242	13
76664	HTF248	13
76665	HTF254	13
76666	HTF260	13
76667	HTF272	13
76668	CBC18	148
76669	CBC24	148
76670	CBC30	148
76671	CBC36	148
76672	CBC42	148
76673	CBC48	148
76674	CBC54	148
76675	CBC60	148
76692	CPB	148
76695	MSPP66	141
76697	TRB78	45
76697	TRB78	52
76697	TRB78	172
76712	UTC18	135

ITEM CODE	ORDERING NUMBER	PAGE
76713	UTC24	135
76714	UTC30	135
76715	UTC36	135
76716	UTC42	135
76717	UTC48	135
76718	UTC54	135
76719	UTC60	135
76720	UTC72	135
76721	UTC84	135
76724	UTF18	135
76725	UTF24	135
76726	UTF30	135
76727	UTF36	135
76728	UTF42	135
76729	UTF48	135
76730	UTF54	135
76731	UTF60	135
76732	UTF72	135
76733	UTF84	135
76748	URCB18/450	135
76749	URCB24/600	135
76750	URCB30/750	135
76751	URCB36/900	135
76752	URCB42/1050	135
76753	URCB48/1200	135
76754	URCB54/1350	135
76755	URCB60/1500	135
76756	URCB72/1800	135
76757	URCB84/2100	135
76772	USP18/450	137
76773	USP24/600	137
76774	USP30/750	137
76775	USP36/900	137
76776	USP42/1050	137
76777	USP48/1200	137
76778	USP54/1350	137
76779	USP60/1500	137
76780	USP72/1800	137
76781	USP84/2100	137
76784	UPSBK	137
76785	UPBK	137
76788	ABU	137
76788	ABU	137
76789	UMBK	137
76789	UMBK	137
76790	USPK	137
76790	USPK	137
76791	UHSPK	137
76791	UHSPK	137
76792	USMK	137
76792	USMK	137
76793	UHMK	137
76793	UHMK	137
76794	UST-P	137
76795	UST-W	137
76796	MSP-284	34
76797	MSP-884	34
76798	MMP-684	41
76799	MMP-1284	41
76800	MHCP-84S	69
76803	MHS-84	114
76804	MHS-84V	114
76805	MHS-84RV	116
76806	MDWS-84	138
76807	MSPP84	39
76808	MMPCP84	47
76808	MMPCP84	61
76809	MHCP-BPA84	71
76810	MHCP-BCK84	71
76811	MHP-CP84	73
76812	MHCP-2BC84	73
76814	MHSP-84	120
76815	DWP-84	141
76816	DRXL-24-420	206
76817	DRXL-30-420	206

Index *by Item Code*

ITEM CODE	ORDERING NUMBER	PAGE	ITEM CODE	ORDERING NUMBER	PAGE	ITEM CODE	ORDERING NUMBER	PAGE	ITEM CODE	ORDERING NUMBER	PAGE
76818	DRXL-36-420	206	76893	DRXH-54-520	210	76942	CDWB84	138	77101	CRB-LS34W	27
76819	DRXL-42-420	206	76894	DRXH-60-520	210	76943	SST-BUK	120	77101	CRB-LS34W	31
76820	DRXL-48-420	206	76895	DRXH-72-520	210	76943	SST-BUK	141	77102	CRB-LS40W	27
76821	DRXL-54-420	206	76896	DRXH-24-435	210	76950	OIBBK	214	77102	CRB-LS40W	31
76822	DRXL-60-420	206	76897	DRXH-30-435	210	76965	IB4-1U	214	77103	CRB-LS46W	27
76823	DRXL-72-420	206	76898	DRXH-36-435	210	76966	IB5-1U	214	77103	CRB-LS46W	31
76824	DRXL-24-520	206	76899	DRXH-42-435	210	76967	RBAGS-18	173	77104	CRB-LS52W	27
76825	DRXL-30-520	206	76900	DRXH-48-435	210	76968	RBAGS-24	173	77104	CRB-LS52W	31
76826	DRXL-36-520	206	76901	DRXH-54-435	210	76969	RBAGS-30	173	77105	CRB-LS58W	27
76827	DRXL-42-520	206	76902	DRXH-60-435	210	76970	RBAGS-36	173	77105	CRB-LS58W	31
76828	DRXL-48-520	206	76903	DRXH-72-435	210	76971	RBAGS-42	173	77106	RBAGM-16	29
76829	DRXL-54-520	206	76904	DRXH-24-535	210	76972	RBAGS-48	173	77106	RBAGM-16	173
76830	DRXL-60-520	206	76905	DRXH-30-535	210	76973	RBAGS-54	173	77107	RBAGM-22	29
76831	DRXL-72-520	206	76906	DRXH-36-535	210	76974	RBAGS-60	173	77107	RBAGM-22	173
76832	DRXL-24-435	206	76907	DRXH-42-535	210	76975	RBAGS-72	173	77108	RBAGM-28	29
76833	DRXL-30-435	206	76908	DRXH-48-535	210	76976	RBAGS-84	173	77108	RBAGM-28	173
76834	DRXL-36-435	206	76909	DRXH-54-535	210	76977	UBTK	137	77109	RBAGM-34	29
76835	DRXL-42-435	206	76910	DRXH-60-535	210	76978	UHDBTK	137	77109	RBAGM-34	173
76836	DRXL-48-435	206	76911	DRXH-72-535	210	76983	FL-XL	245	77110	RBAGM-40	29
76837	DRXL-54-435	206	76912	DRXD-42-520	212	76984	FLVRL-XL	245	77110	RBAGM-40	173
76838	DRXL-60-435	206	76913	DRXD-48-520	212	76985	FLTW-XL	245	77111	RBAGM-46	29
76839	DRXL-72-435	206	76914	DRXD-54-520	212	76986	FLELK-XL	245	77111	RBAGM-46	173
76840	DRXL-24-535	206	76915	DRXD-60-520	212	77037	CSTBK	134	77114	LS-BP	29
76841	DRXL-30-535	206	76916	DRXD-72-520	212	77047	TRB84	45	77115	LS-BP-S/S	33
76842	DRXL-36-535	206	76917	DRXD-84-520	212	77047	TRB84	52	77117	LS-SW	29
76843	DRXL-42-535	206	76918	DRXD-96-520	212	77047	TRB84	172	77118	LS-SS	29
76844	DRXL-48-535	206	76919	DRXD-42-535	212	77048	TRB90	45	77120	LST-TAK	29
76845	DRXL-54-535	206	76920	DRXD-48-535	212	77048	TRB90	52	77121	LST-P	29
76846	DRXL-60-535	206	76921	DRXD-54-535	212	77048	TRB90	172	77122	LST-W	29
76847	DRXL-72-535	206	76922	DRXD-60-535	212	77052	SACSK	134	77123	LST-S	29
76848	DRXM-24-420	208	76923	DRXD-72-535	212	77065	SACSRC	134	77124	LST-B-S/S	33
76849	DRXM-30-420	208	76924	DRXD-84-535	212	77070	LSP12	29	77125	LST-W-S/S	33
76850	DRXM-36-420	208	76925	DRXD-96-535	212	77071	LSP18	29	77126	LST-W-S/S-2	33
76851	DRXM-42-420	208	76926	IB4	192	77072	LSP24	29	77127	EZP-LS212	25
76852	DRXM-48-420	208	76926	IB4	195	77073	LSP30	29	77128	EZP-LS218	25
76853	DRXM-54-420	208	76926	IB4	198	77074	LSP36	29	77129	EZP-LS224	25
76854	DRXM-60-420	208	76926	IB4	206	77075	LSP42	29	77130	EZP-LS230	25
76855	DRXM-72-420	208	76926	IB4	208	77076	LSP48	29	77131	EZP-LS236	25
76856	DRXM-24-520	208	76926	IB4	210	77077	LSP54	29	77132	EZP-LS242	25
76857	DRXM-30-520	208	76927	IB5	192	77078	LSP60	29	77133	EZP-LS248	25
76858	DRXM-36-520	208	76927	IB5	195	77079	LSP12-S/S	33	77134	EZP-LS254	25
76859	DRXM-42-520	208	76927	IB5	198	77080	LSP18-S/S	33	77135	EZP-LS260	25
76860	DRXM-48-520	208	76927	IB5	206	77081	LSP24-S/S	33	77136	EZP-LS818	25
76861	DRXM-54-520	208	76927	IB5	208	77082	LSP30-S/S	33	77137	EZP-LS824	25
76862	DRXM-60-520	208	76927	IB5	210	77083	LSP36-S/S	33	77138	EZP-LS830	25
76863	DRXM-72-520	208	76927	IB5	212	77084	LSP42-S/S	33	77139	EZP-LS836	25
76864	DRXM-24-435	208	76928	IBBK	189	77085	LSP48-S/S	33	77140	EZP-LS842	25
76865	DRXM-30-435	208	76928	IBBK	192	77086	LSP54-S/S	33	77141	EZP-LS848	25
76866	DRXM-36-435	208	76928	IBBK	195	77087	LSP60-S/S	33	77142	EZP-LS854	25
76867	DRXM-42-435	208	76928	IBBK	198	77088	CRB-LS10	27	77143	EZP-LS860	25
76868	DRXM-48-435	208	76928	IBBK	206	77088	CRB-LS10	31	77144	CLSFG-212	30
76869	DRXM-54-435	208	76928	IBBK	208	77089	CRB-LS16	27	77145	CLSFG-218	30
76870	DRXM-60-435	208	76928	IBBK	210	77089	CRB-LS16	31	77146	CLSFG-224	30
76871	DRXM-72-435	208	76928	IBBK	212	77090	CRB-LS22	27	77147	CLSFG-230	30
76872	DRXM-24-535	208	76929	IBS-L4	206	77090	CRB-LS22	31	77148	CLSFG-236	30
76873	DRXM-30-535	208	76930	IBS-L5	206	77091	CRB-LS28	27	77149	CLSFG-242	30
76874	DRXM-36-535	208	76931	IBS-M4	198	77091	CRB-LS28	31	77150	CLSFG-248	30
76875	DRXM-42-535	208	76931	IBS-M4	208	77092	CRB-LS34	27	77151	CLSFG-254	30
76876	DRXM-48-535	208	76932	IBS-M5	198	77092	CRB-LS34	31	77152	CLSFG-260	30
76877	DRXM-54-535	208	76932	IBS-M5	208	77093	CRB-LS40	27	77153	CLSFG-818	30
76878	DRXM-60-535	208	76933	IBS-H4	210	77093	CRB-LS40	31	77154	CLSFG-824	30
76879	DRXM-72-535	208	76934	IBS-H5	210	77094	CRB-LS46	27	77155	CLSFG-830	30
76880	DRXH-24-420	210	76935	ISABK	212	77094	CRB-LS46	31	77156	CLSFG-836	30
76881	DRXH-30-420	210	76936	IMK	206	77095	CRB-LS52	27	77157	CLSFG-842	30
76882	DRXH-36-420	210	76936	IMK	208	77095	CRB-LS52	31	77158	CLSFG-848	30
76883	DRXH-42-420	210	76936	IMK	210	77096	CRB-LS58	27	77159	CLSFG-854	30
76884	DRXH-48-420	210	76937	IEA-42-60	212	77096	CRB-LS58	31	77160	CLSFG-860	30
76885	DRXH-54-420	210	76938	IEA-72-96	212	77097	CRB-LS10W	27	77250	FL-PKIT-ML	245
76886	DRXH-60-420	210	76939	HW-IMPB	214	77097	CRB-LS10W	31	77251	FL-PKIT-XL	245
76887	DRXH-72-420	210	76940	CRB76	16	77098	CRB-LS16W	27	77324	MMKU	137
76888	DRXH-24-520	210	76940	CRB76	22	77098	CRB-LS16W	31	77327	MMKUHD	137
76889	DRXH-30-520	210	76940	CRB76	37	77099	CRB-LS22W	27	77330	RMC2-FS-50	244
76890	DRXH-36-520	210	76941	CRB82	16	77099	CRB-LS22W	31	77365	LS-SPK	29
76891	DRXH-42-520	210	76941	CRB82	22	77100	CRB-LS28W	27	77366	LSTMPK	29
76892	DRXH-48-520	210	76941	CRB82	37	77100	CRB-LS28W	31	77367	LSTPB-RK	29

Index *by Item Code*

ITEM CODE	ORDERING NUMBER	PAGE
77384	EZPTBT	20
77385	EZPTBTHD	20
77387	SPG-CVR-A	156
77388	SPG-CVR-B	156
77389	SPG-CVR-C	156
77390	SPG-CVR-D	156
77391	SPG-CVR-E	156
77392	SPG-CVR-F	156
77393	SPG-CVR-G	156
77423	RAPEK	155
77424	MMP-624-S/S	42
77425	MMP-630-S/S	42
77426	MMP-636-S/S	42
77427	MMP-642-S/S	42
77428	MMP-648-S/S	42
77429	MMP-654-S/S	42
77430	MMP-660-S/S	42
77431	MMP-672-S/S	42
77432	MMP-684-S/S	42
77433	MMP-1230-S/S	42
77434	MMP-1236-S/S	42
77435	MMP-1242-S/S	42
77436	MMP-1248-S/S	42
77437	MMP-1254-S/S	42
77438	MMP-1260-S/S	42
77439	MMP-1272-S/S	42
77440	MMP-1284-S/S	42
77442	PSTA-S/S	40
77442	PSTA-S/S	48
77443	TEN-LOCK-KIT	156
77450	QMTS-P-S/S	24
77450	QMTS-P-S/S	40
77450	QMTS-P-S/S	48
77451	QMTS-W-S/S	24
77451	QMTS-W-S/S	40
77451	QMTS-W-S/S	48
77452	QMTS-G-S/S	24
77452	QMTS-G-S/S	40
77452	QMTS-G-S/S	48
77453	MSP-224-S/S	36
77454	MSP-230-S/S	36
77455	MSP-236-S/S	36
77456	MSP-242-S/S	36
77457	MSP-248-S/S	36
77458	MSP-254-S/S	36
77459	MSP-260-S/S	36
77460	MSP-272-S/S	36
77461	MSP-284-S/S	36
77462	MSP-824-S/S	36
77463	MSP-830-S/S	36
77464	MSP-836-S/S	36
77465	MSP-842-S/S	36
77466	MSP-848-S/S	36
77467	MSP-854-S/S	36
77468	MSP-860-S/S	36
77470	MSP-872-S/S	36
77471	MSP-884-S/S	36
77472	MSPP24-S/S	40
77473	MSPP30-S/S	40
77474	MSPP36-S/S	40
77475	MSPP42-S/S	40
77476	MSPP48-S/S	40
77477	MSPP54-S/S	40
77478	MSPP60-S/S	40
77479	MSPP72-S/S	40
77480	MSPP84-S/S	40
77517	RBDTXHD-6.5C	181
77524	MSPPL-S/S	40
77529	ISABK-LMH	206
77529	ISABK-LMH	208
77529	ISABK-LMH	210
77530	IBS-D5	212
77531	MRB18	58
77531	MRB18	65
77532	MRB24	58

ITEM CODE	ORDERING NUMBER	PAGE
77532	MRB24	65
77533	MRB30	58
77533	MRB30	65
77534	MRB36	58
77534	MRB36	65
77535	MRB42	58
77535	MRB42	65
77536	MRB48	58
77536	MRB48	65
77537	MRB54	58
77537	MRB54	65
77538	MRB60	58
77538	MRB60	65
77539	MRB66	58
77539	MRB66	65
77540	MRB72	58
77540	MRB72	65
77541	MRB78	58
77541	MRB78	65
77542	MRB84	58
77542	MRB84	65
77543	MRB90	58
77543	MRB90	65
77544	MRB96	58
77544	MRB96	65
77545	MRB102	58
77545	MRB102	65
77546	MRB108	58
77546	MRB108	65
77547	MRB114	58
77547	MRB114	65
77548	SHIM-KITL	189
77548	SHIM-KITL	192
77548	SHIM-KITL	195
77548	SHIM-KITL	206
77549	SHIM-KITM	198
77549	SHIM-KITM	208
77550	SHIM-KITH	210
77551	CRB-LS10HT	27
77551	CRB-LS10HT	31
77552	CRB-LS16HT	27
77552	CRB-LS16HT	31
77553	CRB-LS22HT	27
77553	CRB-LS22HT	31
77554	CRB-LS28HT	27
77554	CRB-LS28HT	31
77555	CRB-LS34HT	27
77555	CRB-LS34HT	31
77556	CRB-LS40HT	27
77556	CRB-LS40HT	31
77557	CRB-LS46HT	27
77557	CRB-LS46HT	31
77558	CRB-LS52HT	27
77558	CRB-LS52HT	31
77559	CRB-LS58HT	27
77559	CRB-LS58HT	31
77575	MMP-1836	41
77576	MMP-1842	41
77577	MMP-1848	41
77578	MMP-1854	41
77579	MMP-1860	41
77580	MMP-1872	41
77581	MMP-1884	41
77582	MSPMPK-S/S	40
77582	MSPMPK-S/S	48
77583	MSPBPK-S/S	24
77583	MSPBPK-S/S	40
77584	QMT-P-S/S	40
77584	QMT-P-S/S	48
77585	QMT-W-S/S	40
77585	QMT-W-S/S	48
77586	QMT-G-S/S	40
77586	QMT-G-S/S	48
77587	QMTPAK-S/S	40
77587	QMTPAK-S/S	48

ITEM CODE	ORDERING NUMBER	PAGE
77588	QMTPSBK-S/S	40
77588	QMTPSBK-S/S	48
77590	MMPCP24-S/S	48
77591	MMPCP30-S/S	48
77592	MMPCP36-S/S	48
77593	MMPCP42-S/S	48
77594	MMPCP48-S/S	48
77595	MMPCP54-S/S	48
77596	MMPCP60-S/S	48
77597	MMPCP72-S/S	48
77598	MMPCP84-S/S	48
77599	MHP-EP-S/S	48
77600	MMPBPK-S/S	48
77601	MHS-24-S/S	118
77602	MHS-30-S/S	118
77603	MHS-36-S/S	118
77604	MHS-42-S/S	118
77605	MHS-48-S/S	118
77606	MHS-54-S/S	118
77607	MHS-60-S/S	118
77608	MHS-72-S/S	118
77609	MHS-84-S/S	118
77610	MHS-24V-S/S	118
77611	MHS-30V-S/S	118
77612	MHS-36V-S/S	118
77613	MHS-42V-S/S	118
77614	MHS-48V-S/S	118
77615	MHS-54V-S/S	118
77616	MHS-60V-S/S	118
77617	MHS-72V-S/S	118
77618	MHS-84V-S/S	118
77620	MHSP24-S/S	122
77621	MHSP30-S/S	122
77622	MHSP36-S/S	122
77623	MHSP42-S/S	122
77624	MHSP48-S/S	122
77625	MHSP54-S/S	122
77626	MHSP60-S/S	122
77627	MHSP72-S/S	122
77628	MHSP84-S/S	122
77630	STS-W-S/S	122
77631	STS-S-S/S	122
77632	STS-B-S/S	122
77633	STHDPM2-S/S	122
77634	STHDMK2-S/S	122
77635	STGK2-S/S	122
77636	SST-BUK-S/S	122
77637	SST2HD-W-S/S	122
77638	SST2HD-S-S/S	122
77639	SST2HD-B-S/S	122
77640	MHS-24R-S/S	118
77641	MHS-30R-S/S	118
77642	MHS-36R-S/S	118
77643	MHS-42R-S/S	118
77644	MHS-48R-S/S	118
77645	MHS-54R-S/S	118
77646	MHS-60R-S/S	118
77647	MHS-72R-S/S	118
77648	MHS-84R-S/S	118
77649	MHS-24RV-S/S	118
77650	MHS-30RV-S/S	118
77651	MHS-36RV-S/S	118
77652	MHS-42RV-S/S	118
77653	MHS-48RV-S/S	118
77654	MHS-54RV-S/S	118
77655	MHS-60RV-S/S	118
77656	MHS-72RV-S/S	118
77657	MHS-84RV-S/S	118
77664	PTS-18R	223
77665	PTS-24R	223
77666	PTS-30R	223
77667	PTS-36R	223
77668	PTS-42R	223
77669	PTS-48R	223
77670	PTS-54R	223

ITEM CODE	ORDERING NUMBER	PAGE
77671	PTS-60R	223
77672	PTS-72R	223
77673	PTS-30R-UG	223
77674	PTS-36R-UG	223
77675	PTS-42R-UG	223
77676	PTS-48R-UG	223
77677	PTS-54R-UG	223
77678	PTS-60R-UG	223
77679	PTS-72R-UG	223
77680	PTS-RR21	223
77681	PTS-RR27	223
77682	PTS-RR33	223
77683	PTS-RR39	223
77683	PTS-RR39	223
77684	PTS-RR45	223
77684	PTS-RR45	223
77685	PTS-RR51	223
77685	PTS-RR51	223
77686	PTS-RR57	223
77686	PTS-RR57	223
77687	PTS-RR63	223
77687	PTS-RR63	223
77688	PTS-RR69	223
77689	PTS-RR75	223
77690	PTS-RR81	223
77691	PTS-SR	225
77692	PTS-HDSR	225
77694	PTS-SAK	225
77696	PTS-IBK	225
77697	PTS-HIBK	225
77698	PTS-PS	225
77699	PTS-PA	225
77700	PTS-MBK	225
77701	PTS-MBKUG	225
77702	PTS-EBK	225
77703	MHP-624	55
77704	MHP-630	55
77705	MHP-636	55
77706	MHP-642	55
77707	MHP-648	55
77708	MHP-654	55
77709	MHP-660	55
77710	MHP-672	55
77711	MHP-684	55
77712	MHP-696	55
77713	MHP-1230	55
77714	MHP-1236	55
77715	MHP-1242	55
77716	MHP-1248	55
77717	MHP-1254	55
77718	MHP-1260	55
77719	MHP-1272	55
77720	MHP-1284	55
77721	MHP-1296	55
77722	MMPCP96	47
77722	MMPCP96	61
77723	PST2-W	61
77723	PST2-W	68
77723	PST2-W	71
77723	PST2-W	73
77724	PST2-S	61
77724	PST2-S	68
77724	PST2-S	71
77724	PST2-S	73
77725	PST2-R	61
77725	PST2-R	68
77725	PST2-R	71
77725	PST2-R	73
77726	PSTS-R	61
77726	PSTS-R	68
77726	PSTS-R	73
77727	MHPMPK	61
77727	MHPMPK	68
77727	MHPMPK	73
77728	MHPBPK	61

Index *by Item Code*

ITEM CODE	ORDERING NUMBER	PAGE	ITEM CODE	ORDERING NUMBER	PAGE	ITEM CODE	ORDERING NUMBER	PAGE	ITEM CODE	ORDERING NUMBER	PAGE
77728	MHPBPK	68	77881	SST2HD-B	120	77906	CART-60/1500	130	77968	RC24-ESAC	127
77729	FLCK	245	77881	SST2HD-B	141	77906	CART-60/1500	134	77969	RC30-ESAC	127
77741	SPG-CVR-H	156	77882	SACRKN	126	77907	CART-72/1800	126	77970	RC36-ESAC	127
77742	CTS-W	134	77882	SACRKN	130	77907	CART-72/1800	130	77971	RC42-ESAC	127
77743	CTS-S	96	77882	SACRKN	134	77907	CART-72/1800	134	77972	RC48-ESAC	127
77743	CTS-S	134	77883	SACRH	126	77908	CART2-60/1500	126	77973	RC54-ESAC	127
77744	CTS-B	134	77883	SACRH	130	77908	CART2-60/1500	130	77974	RC60-ESAC	127
77745	CTS-G	134	77883	SACRH	134	77908	CART2-60/1500	134	77975	RC72-ESAC	127
77746	EZP-LS212HT	26	77884	SACRHL	126	77909	CART2-72/1800	126	77976	RC60-2ESAC	127
77747	EZP-LS218HT	26	77884	SACRHL	130	77909	CART2-72/1800	130	77977	RC72-2ESAC	127
77748	EZP-LS224HT	26	77884	SACRHL	134	77909	CART2-72/1800	134	77978	RC84-2ESAC	127
77749	EZP-LS230HT	26	77885	SACKRP	126	77910	CART2-84/2100	126	77979	RC96-2ESAC	127
77750	EZP-LS236HT	26	77885	SACKRP	130	77910	CART2-84/2100	130	77980	RC120-2ESAC	127
77751	EZP-LS242HT	26	77885	SACKRP	134	77910	CART2-84/2100	134	77981	PV24-ESAC	123
77752	EZP-LS248HT	26	77886	SACRKT	126	77911	CART2-96/2400	126	77982	PV30-ESAC	123
77753	EZP-LS254HT	26	77886	SACRKT	130	77911	CART2-96/2400	130	77983	PV36-ESAC	123
77754	EZP-LS260HT	26	77886	SACRKT	134	77911	CART2-96/2400	134	77984	PV42-ESAC	123
77755	PTS-RHSAA	225	77887	SACPL-24/600	126	77912	CART2-120/3000	126	77985	PV48-ESAC	123
77756	PTS-LHSAA	225	77887	SACPL-24/600	130	77912	CART2-120/3000	130	77986	PV54-ESAC	123
77757	UST-S	137	77887	SACPL-24/600	134	77912	CART2-120/3000	134	77987	PV60-ESAC	123
77768	SACHP2	126	77888	SACPL-30/750	126	77913	PCAP-24/600	126	77988	PV72-ESAC	123
77768	SACHP2	130	77888	SACPL-30/750	130	77914	PCAP-30/750	126	77989	PV60-2ESAC	123
77768	SACHP2	134	77888	SACPL-30/750	134	77915	PCAP-36/900	126	77990	PV72-2ESAC	123
77840	MHS-24-ESAC	131	77889	SACPL-36/900	126	77916	PCAP-42/1050	126	77991	PV84-2ESAC	123
77841	MHS-30-ESAC	131	77889	SACPL-36/900	130	77917	PCAP-48/1200	126	77992	PV96-2ESAC	123
77842	MHS-36-ESAC	131	77889	SACPL-36/900	134	77918	PCAP-54/1350	126	77993	PV120-2ESAC	123
77843	MHS-42-ESAC	131	77890	SACPL-42/1050	126	77919	PCAP-60/1500	126	77994	RV24-ESAC	127
77844	MHS-48-ESAC	131	77890	SACPL-42/1050	130	77920	PCAP-72/1800	126	77995	RV30-ESAC	127
77845	MHS-54-ESAC	131	77890	SACPL-42/1050	134	77921	RCAP-24/600	130	77996	RV36-ESAC	127
77846	MHS-60-ESAC	131	77891	SACPL-48/1200	126	77922	RCAP-30/750	130	77997	RV42-ESAC	127
77847	MHS-72-ESAC	131	77891	SACPL-48/1200	130	77923	RCAP-36/900	130	77998	RV48-ESAC	127
77848	MHS-60-2ESAC	131	77891	SACPL-48/1200	134	77924	RCAP-42/1050	130	77999	RV54-ESAC	127
77849	MHS-72-2ESAC	131	77892	SACPL-54/1350	126	77925	RCAP-48/1200	130	78000	RV60-ESAC	127
77850	MHS-84-2ESAC	131	77892	SACPL-54/1350	130	77926	RCAP-54/1350	130	78001	RV72-ESAC	127
77851	MHS-96-2ESAC	131	77892	SACPL-54/1350	134	77927	RCAP-60/1500	130	78002	RV60-2ESAC	127
77852	MHS-120-2ESAC	131	77893	SACPL-60/1500	126	77928	RCAP-72/1800	130	78003	RV72-2ESAC	127
77853	MHS-24V-ESAC	131	77893	SACPL-60/1500	130	77929	MHS-CARK-C24/600	132	78004	RV84-2ESAC	127
77854	MHS-30V-ESAC	131	77893	SACPL-60/1500	134	77930	MHS-CARK-C30/750	132	78005	RV96-2ESAC	127
77855	MHS-36V-ESAC	131	77894	SACPL-72/1800	126	77931	MHS-CARK-C36/900	132	78006	RV120-2ESAC	127
77856	MHS-42V-ESAC	131	77894	SACPL-72/1800	130	77932	MHS-CARK-C42/1050	132	78072	P-CARK-C24/600	124
77857	MHS-48V-ESAC	131	77894	SACPL-72/1800	134	77933	MHS-CARK-C48/1200	132	78073	P-CARK-C30/750	124
77858	MHS-54V-ESAC	131	77895	SACPL2-60/1500	126	77934	MHS-CARK-C54/1350	132	78074	P-CARK-C36/900	124
77859	MHS-60V-ESAC	131	77895	SACPL2-60/1500	130	77935	MHS-CARK-C60/1500	132	78075	P-CARK-C42/1050	124
77860	MHS-72V-ESAC	131	77895	SACPL2-60/1500	134	77936	MHS-CARK-C72/1800	132	78076	P-CARK-C48/1200	124
77861	MHS-60V-2ESAC	131	77896	SACPL2-72/1800	126	77937	MHS-CARK-V24/600	132	78077	P-CARK-C54/1350	124
77862	MHS-72V-2ESAC	131	77896	SACPL2-72/1800	130	77938	MHS-CARK-V30/750	132	78078	P-CARK-C60/1500	124
77863	MHS-84V-2ESAC	131	77896	SACPL2-72/1800	134	77939	MHS-CARK-V36/900	132	78079	P-CARK-C72/1800	124
77864	MHS-96V-2ESAC	131	77897	SACPL2-84/2100	126	77940	MHS-CARK-V42/1050	132	78080	P-CARK-V24/600	124
77865	MHS-120V-2ESAC	131	77897	SACPL2-84/2100	130	77941	MHS-CARK-V48/1200	132	78081	P-CARK-V30/750	124
77866	SAC2-TIP-TL	126	77897	SACPL2-84/2100	134	77942	MHS-CARK-V54/1350	132	78082	P-CARK-V36/900	124
77866	SAC2-TIP-TL	130	77898	SACPL2-96/2400	126	77943	MHS-CARK-V60/1500	132	78083	P-CARK-V42/1050	124
77866	SAC2-TIP-TL	134	77898	SACPL2-96/2400	130	77944	MHS-CARK-V72/1800	132	78084	P-CARK-V48/1200	124
77867	STGK2	112	77898	SACPL2-96/2400	134	77945	MHS-CARK2-C60/1500	132	78085	P-CARK-V54/1350	124
77867	STGK2	120	77899	SACPL2-120/3000	126	77946	MHS-CARK2-C72/1800	132	78086	P-CARK-V60/1500	124
77867	STGK2	121	77899	SACPL2-120/3000	130	77947	MHS-CARK2-C84/2100	132	78087	P-CARK-V72/1800	124
77867	STGK2	141	77899	SACPL2-120/3000	134	77948	MHS-CARK2-C96/2400	132	78088	P-CARK2-C60/1500	124
77867	STGK2	141	77900	CART-24/600	126	77949	MHS-CARK2-C120/3000	132	78089	P-CARK2-C72/1800	124
77867	STGK2	151	77900	CART-24/600	130	77950	MHS-CARK2-V60/1500	132	78090	P-CARK2-C84/2100	124
77867	STGK2	151	77900	CART-24/600	134	77951	MHS-CARK2-V72/1800	132	78091	P-CARK2-C96/2400	124
77868	SSTHDPM	112	77901	CART-30/750	126	77952	MHS-CARK2-V84/2100	132	78092	P-CARK2-C120/3000	124
77868	SSTHDPM	120	77901	CART-30/750	130	77953	MHS-CARK2-V96/2400	132	78093	P-CARK2-V60/1500	124
77868	SSTHDPM	141	77901	CART-30/750	134	77954	MHS-CARK2-V120/3000	132	78094	P-CARK2-V72/1800	124
77868	SSTHDPM	151	77902	CART-36/900	126	77955	PC24-ESAC	123	78095	P-CARK2-V84/2100	124
77869	CSTHDPM	134	77902	CART-36/900	130	77956	PC30-ESAC	123	78096	P-CARK2-V96/2400	124
77870	SSTHDMK	120	77902	CART-36/900	134	77957	PC36-ESAC	123	78097	P-CARK2-V120/3000	124
77870	SSTHDMK	141	77903	CART-42/1050	126	77958	PC42-ESAC	123	78098	R-CARK-C24/600	128
77871	CSTHDMK	134	77903	CART-42/1050	130	77959	PC48-ESAC	123	78099	R-CARK-C30/750	128
77872	CST1HD-W	134	77903	CART-42/1050	134	77960	PC54-ESAC	123	78100	R-CARK-C36/900	128
77873	CST1HD-S	134	77904	CART-48/1200	126	77961	PC60-ESAC	123	78101	R-CARK-C42/1050	128
77874	CST1HD-B	134	77904	CART-48/1200	130	77962	PC72-ESAC	123	78102	R-CARK-C48/1200	128
77875	CST1HD-G	134	77904	CART-48/1200	134	77963	PC60-2ESAC	123	78103	R-CARK-C54/1350	128
77879	SST2HD-W	120	77905	CART-54/1350	126	77964	PC72-2ESAC	123	78104	R-CARK-C60/1500	128
77879	SST2HD-W	141	77905	CART-54/1350	130	77965	PC84-2ESAC	123	78105	R-CARK-C72/1800	128
77880	SST2HD-S	120	77905	CART-54/1350	134	77966	PC96-2ESAC	123	78106	R-CARK-V24/600	128
77880	SST2HD-S	141	77906	CART-60/1500	126	77967	PC120-2ESAC	123	78107	R-CARK-V30/750	128

Index *by Item Code*

ITEM CODE	ORDERING NUMBER	PAGE
78108	R-CARK-V36/900	128
78109	R-CARK-V42/1050	128
78110	R-CARK-V48/1200	128
78111	R-CARK-V54/1350	128
78112	R-CARK-V60/1500	128
78113	R-CARK-V72/1800	128
78114	R-CARK2-C60/1500	128
78115	R-CARK2-C72/1800	128
78116	R-CARK2-C84/2100	128
78117	R-CARK2-C96/2400	128
78118	R-CARK2-C120/3000	128
78119	R-CARK2-V60/1500	128
78120	R-CARK2-V72/1800	128
78121	R-CARK2-V84/2100	128
78122	R-CARK2-V96/2400	128
78123	R-CARK2-V120/3000	128
78142	STS-G	120
78142	STS-G	141
78142	STS-G	151
78387	CTS-B-S/S	33
78402	RV-18	105
78403	RV-24	105
78404	RV-30	105
78405	RV-36	105
78406	RV-42	105
78407	RV-48	105
78408	RV-54	105
78409	RV-60	105
78414	PP-18	104
78415	PV-24	101
78416	PP-24	104
78417	PV-30	101
78418	PP-30	104
78419	PV-36	101
78420	PP-36	104
78421	PV-42	101
78422	PP-42	104
78423	PV-48	101
78424	PP-48	104
78425	PP-54	104
78426	RP-18	107
78427	RP-24	107
78428	RP-30	107
78429	RP-36	107
78430	RP-42	107
78431	RP-48	107
78432	RP-54	107
78433	RP-60	107
78451	PP-60	104
78453	PV-18	101
78454	PV-54	101
78455	PV-60	101
78462	LSTMPK2-S/S	33
78471	CRB-W10	16
78471	CRB-W10	22
78471	CRB-W10	37
78472	CRB-W16	16
78472	CRB-W16	22
78472	CRB-W16	37
78473	CRB-W22	16
78473	CRB-W22	22
78473	CRB-W22	37
78474	CRB-W28	16
78474	CRB-W28	22
78474	CRB-W28	37
78475	CRB-W34	16
78475	CRB-W34	22
78475	CRB-W34	37
78476	CRB-W40	16
78476	CRB-W40	22
78476	CRB-W40	37
78477	CRB-W46	16
78477	CRB-W46	22
78477	CRB-W46	37
78478	CRB-W52	16

ITEM CODE	ORDERING NUMBER	PAGE
78478	CRB-W52	22
78478	CRB-W52	37
78479	CRB-W58	16
78479	CRB-W58	22
78479	CRB-W58	37
78488	EZP1T-212	12
78489	EZP1T-218	12
78490	EZP1T-224	12
78491	EZP1T-230	12
78492	EZP1T-236	12
78493	EZP1T-242	12
78494	EZP1T-248	12
78495	EZP1T-254	12
78496	EZP1T-260	12
78497	EZP1T-272	12
78498	EZP1T-818	12
78499	EZP1T-824	12
78500	EZP1T-830	12
78501	EZP1T-836	12
78502	EZP1T-842	12
78503	EZP1T-848	12
78504	EZP1T-854	12
78505	EZP1T-860	12
78506	EZP1T-872	12
78507	EZPTMPK	20
78508	EZPTCK	20
78509	EZPTCKHD	20
78510	EZPTSR	20
78511	EZPTSK	20
78512	EZPTSKHD	20
78591	MHP-1836	55
78592	MHP-1842	55
78593	MHP-1848	55
78594	MHP-1854	55
78595	MHP-1860	55
78596	MHP-1872	55
78597	MHP-1884	55
78598	MHP-1896	55
78599	MHP-624P	56
78600	MHP-630P	56
78601	MHP-636P	56
78602	MHP-642P	56
78603	MHP-648P	56
78604	MHP-654P	56
78605	MHP-660P	56
78606	MHP-672P	56
78607	MHP-684P	56
78608	MHP-696P	56
78609	MHP-1230P	56
78610	MHP-1236P	56
78611	MHP-1242P	56
78612	MHP-1248P	56
78613	MHP-1254P	56
78614	MHP-1260P	56
78615	MHP-1272P	56
78616	MHP-1284P	56
78617	MHP-1296P	56
78618	MHP-1836P	56
78619	MHP-1842P	56
78620	MHP-1848P	56
78621	MHP-1854P	56
78622	MHP-1860P	56
78623	MHP-1872P	56
78624	MHP-1884P	56
78625	MHP-1896P	56
78669	MHP-2442	55
78670	MHP-2448	55
78671	MHP-2454	55
78672	MHP-2460	55
78673	MHP-2472	55
78674	MHP-2484	55
78675	MHP-2496	55
78676	MHP-2442P	56
78677	MHP-2448P	56
78678	MHP-2454P	56

ITEM CODE	ORDERING NUMBER	PAGE
78679	MHP-2460P	56
78680	MHP-2472P	56
78681	MHP-2484P	56
78682	MHP-2496P	56
78683	PACB60	47
78683	PACB60	54
78683	PACB60	61
78683	PACB60	68
78683	PACB60	73
78684	PAT1	44
78684	PAT1	51
78684	PAT1	57
78684	PAT1	64
78684	PAT1	70
78684	PAT1	117
78684	PAT1	139
78685	PAT2	44
78685	PAT2	51
78685	PAT2	57
78685	PAT2	64
78685	PAT2	70
78685	PAT2	117
78685	PAT2	139
78686	MMPCP96-S/S	48
78700	ICT6-S/S	122
78703	SAT2NCB	121
78703	SAT2NCB	141
78704	SAT2MK	121
78704	SAT2MK	141
78705	PAK	47
78705	PAK	54
78705	PAK	61
78705	PAK	68
78705	PAK	71
78705	PAK	73
78706	MMP-624P	43
78707	MMP-630P	43
78708	MMP-636P	43
78709	MMP-642P	43
78710	MMP-648P	43
78711	MMP-654P	43
78712	MMP-660P	43
78713	MMP-672P	43
78714	MMP-684P	43
78715	MMP-1230P	43
78716	MMP-1236P	43
78717	MMP-1242P	43
78718	MMP-1248P	43
78719	MMP-1254P	43
78720	MMP-1260P	43
78721	MMP-1272P	43
78722	MMP-1284P	43
78723	MHCP-24P	69
78724	MHCP-30P	69
78725	MHCP-36P	69
78726	MHCP-42P	69
78727	MHCP-48P	69
78728	MHCP-54P	69
78729	MHCP-60P	69
78730	MHCP-72P	69
78731	MHCP-84P	69
78732	SAT2PM	121
78732	SAT2PM	141
78732	SAT2PM	151
78733	SAT2AK	120
78733	SAT2AK	121
78733	SAT2AK	141
78733	SAT2AK	151
78735	SAT2PAT	121
78735	SAT2PAT	141
78736	MHS-24P	116
78737	MHS-30P	116
78738	MHS-36P	116
78739	MHS-42P	116
78740	MHS-48P	116

ITEM CODE	ORDERING NUMBER	PAGE
78741	MHS-54P	116
78742	MHS-60P**	116
78743	MHS-72P**	116
78744	MHS-84P**	116
78745	MDWS-24P	138
78746	MDWS-30P	138
78747	MDWS-36P	138
78748	MDWS-42P	138
78749	MDWS-48P	138
78750	MDWS-54P	138
78751	MDWS-60P	138
78752	MDWS-72P	138
78753	MDWS-84P	138
78754	TRB-HT18	45
78754	TRB-HT18	52
78755	TRB-HT24	45
78755	TRB-HT24	52
78756	TRB-HT30	45
78756	TRB-HT30	52
78757	TRB-HT36	45
78757	TRB-HT36	52
78758	TRB-HT42	45
78758	TRB-HT42	52
78759	TRB-HT48	45
78759	TRB-HT48	52
78760	TRB-HT54	45
78760	TRB-HT54	52
78761	TRB-HT60	45
78761	TRB-HT60	52
78762	TRB-HT66	45
78762	TRB-HT66	52
78763	TRB-HT72	45
78763	TRB-HT72	52
78764	TRB-HT78	45
78764	TRB-HT78	52
78765	TRB-HT84	45
78765	TRB-HT84	52
78766	TRB-HT90	45
78766	TRB-HT90	52
78767	PTS-WMK	225
78786	HAR-K	19
78786	HAR-K	165
78789	SB4	189
78789	SB4	192
78789	SB4	195
78789	SB4	198
78789	SB4	206
78789	SB4	208
78789	SB4	210
78790	SB5	189
78790	SB5	192
78790	SB5	195
78790	SB5	198
78790	SB5	206
78790	SB5	208
78790	SB5	210
78790	SB5	212
78791	PATLK	44
78791	PATLK	51
78791	PATLK	57
78791	PATLK	64
78791	PATLK	70
78791	PATLK	117
78791	PATLK	139
78794	PATHK	44
78794	PATHK*	44
78794	PATHK	51
78794	PATHK*	51
78794	PATHK	57
78794	PATHK*	57
78794	PATHK	64
78794	PATHK*	64
78794	PATHK	70
78794	PATHK*	70
78794	PATHK	117

Index *by Item Code*

ITEM CODE	ORDERING NUMBER	PAGE
78794	PATHK*	117
78794	PATHK	139
78794	PATHK*	139
78799	PANK*	44
78799	PANK*	51
78799	PANK*	57
78799	PANK*	64
78799	PANK*	70
78799	PANK*	117
78799	PANK*	139
78801	H-MK2	165
78808	EST-P-S/S	24
78809	EST-W-S/S	24
78810	EST-G-S/S	24
78812	EZP1P12-S/S	24
78813	EZP1P18-S/S	24
78814	EZP1P24-S/S	24
78815	EZP1P30-S/S	24
78816	EZP1P36-S/S	24
78817	EZP1P42-S/S	24
78818	EZP1P48-S/S	24
78819	EZP1P54-S/S	24
78820	EZP1P60-S/S	24
78821	EZP1P72-S/S	24
78838	CFG-212	21
78839	CFG-218	21
78840	CFG-224	21
78841	CFG-230	21
78842	CFG-236	21
78843	CFG-242	21
78844	CFG-248	21
78845	CFG-254	21
78846	CFG-260	21
78848	EZP1PL-S/S	24
78849	ESTAK-EST-S/S	24
78850	LS-SW-S/S	33
78855	EZSB24-4C	187
78856	EZSB30-4C	187
78857	EZSB36-4C	187
78858	EZSB42-4C	187
78859	EZSB48-4C	187
78860	EZSB54-4C	187
78861	EZSB60-4C	187
78862	EZSB72-4C	187
78863	EZSB24-5C	187
78864	EZSB30-5C	187
78865	EZSB36-5C	187
78866	EZSB42-5C	187
78867	EZSB48-5C	187
78868	EZSB54-5C	187
78869	EZSB60-5C	187
78870	EZSB72-5C	187
78871	EZSB24-4I	190
78872	EZSB30-4I	190
78873	EZSB36-4I	190
78874	EZSB42-4I	190
78875	EZSB48-4I	190
78876	EZSB54-4I	190
78877	EZSB60-4I	190
78878	EZSB72-4I	190
78879	EZSB24-5I	190
78880	EZSB30-5I	190
78881	EZSB36-5I	190
78882	EZSB42-5I	190
78883	EZSB48-5I	190
78884	EZSB54-5I	190
78885	EZSB60-5I	190
78886	EZSB72-5I	190
78887	EZIB24-4L	193
78888	EZIB30-4L	193
78889	EZIB36-4L	193
78890	EZIB42-4L	193
78891	EZIB48-4L	193
78892	EZIB54-4L	193
78893	EZIB60-4L	193
78894	EZIB72-4L	193
78895	EZIB24-5L	193
78896	EZIB30-5L	193
78897	EZIB36-5L	193
78898	EZIB42-5L	193
78899	EZIB48-5L	193
78900	EZIB54-5L	193
78901	EZIB60-5L	193
78902	EZIB72-5L	193
78903	EZIB24-4M	196
78904	EZIB30-4M	196
78905	EZIB36-4M	196
78906	EZIB42-4M	196
78907	EZIB48-4M	196
78908	EZIB54-4M	196
78909	EZIB60-4M	196
78910	EZIB72-4M	196
78911	EZIB24-5M	196
78912	EZIB30-5M	196
78913	EZIB36-5M	196
78914	EZIB42-5M	196
78915	EZIB48-5M	196
78916	EZIB54-5M	196
78917	EZIB60-5M	196
78918	EZIB72-5M	196
78919	CCMK	92
78919	CCMK	104
78919	CCMK	107
78919	CCMK	166
78920	CCMKHD	92
78920	CCMKHD	126
78920	CCMKHD	130
78920	CCMKHD	166
78923	EZP1MPK-S/S	24
78924	CFG-818	21
78925	CFG-824	21
78926	CFG-830	21
78927	CFG-836	21
78928	CFG-842	21
78929	CFG-848	21
78930	CFG-854	21
78931	CFG-860	21
78933	LSTMPK-S/S	33
78934	EZP1-212W	15
78935	EZP1-218W	15
78936	EZP1-224W	15
78937	EZP1-230W	15
78938	EZP1-236W	15
78939	EZP1-242W	15
78940	EZP1-248W	15
78941	EZP1-254W	15
78942	EZP1-260W	15
78943	EZP1-272W	15
78944	EZBMK-24	195
78944	EZBMK-24	198
78945	EZBMK-30	195
78945	EZBMK-30	198
78946	EZBMK-36	195
78946	EZBMK-36	198
78947	EZBMK-42	195
78947	EZBMK-42	198
78948	EZBMK-48	195
78948	EZBMK-48	198
78949	EZBMK-54	195
78949	EZBMK-54	198
78950	EZBMK-60	195
78950	EZBMK-60	198
78951	EZBMK-72	195
78951	EZBMK-72	198
78952	EZRMK	189
78953	EZBS-L4	192
78953	EZBS-L4	195
78954	EZBS-L5	192
78954	EZBS-L5	195
78955	MHCP-96S	69
78956	MHCP-BPA96	71
78957	MHCP-BCK96	71
78958	MHP-CP96	73
78959	MHCP-96P	69
78970	EZWPK-24	189
78970	EZWPK-24	192
78970	EZWPK-24	195
78970	EZWPK-24	198
78971	EZWPK-30	189
78971	EZWPK-30	192
78971	EZWPK-30	195
78971	EZWPK-30	198
78972	EZWPK-36	189
78972	EZWPK-36	192
78972	EZWPK-36	195
78972	EZWPK-36	198
78973	EZWPK-42	189
78973	EZWPK-42	192
78973	EZWPK-42	195
78973	EZWPK-42	198
78974	EZWPK-48	189
78974	EZWPK-48	192
78974	EZWPK-48	195
78974	EZWPK-48	198
78975	EZWPK-54	189
78975	EZWPK-54	192
78975	EZWPK-54	195
78975	EZWPK-54	198
78976	EZWPK-60	189
78976	EZWPK-60	192
78976	EZWPK-60	195
78976	EZWPK-60	198
78977	EZWPK-72	189
78977	EZWPK-72	192
78977	EZWPK-72	195
78977	EZWPK-72	198
78978	EZCSK-24	189
78978	EZCSK-24	192
78978	EZCSK-24	195
78978	EZCSK-24	198
78979	EZCSK-30	189
78979	EZCSK-30	192
78979	EZCSK-30	195
78979	EZCSK-30	198
78980	EZCSK-36	189
78980	EZCSK-36	192
78980	EZCSK-36	195
78980	EZCSK-36	198
78981	EZCSK-42	189
78981	EZCSK-42	192
78981	EZCSK-42	195
78981	EZCSK-42	198
78982	EZCSK-48	189
78982	EZCSK-48	192
78982	EZCSK-48	195
78982	EZCSK-48	198
78983	EZCSK-54	189
78983	EZCSK-54	192
78983	EZCSK-54	195
78983	EZCSK-54	198
78984	EZCSK-60	189
78984	EZCSK-60	192
78984	EZCSK-60	195
78984	EZCSK-60	198
78985	EZCSK-72	189
78985	EZCSK-72	192
78985	EZCSK-72	195
78985	EZCSK-72	198
78986	MHCP-2BC96	73
78987	H-MK1	165
78990	HP-18	165
78991	HP-24	165
78992	HP-30	165
78993	HP-36	165
78994	HP-42	165
78995	HP-48	165
78996	HP-54	165
78997	HP-60	165
78998	HP-72	165
79000	EZAI-24	187
79001	EZAI-30	187
79002	EZAI-36	187
79003	EZAI-42	187
79004	EZAI-48	187
79005	EZAI-54	187
79006	EZAI-60	187
79007	EZAI-72	187
79009	HDRBK	163
79010	HDR24	163
79011	HDR30	163
79012	HDR36	163
79013	HDR42	163
79014	HDR48	163
79015	HDR54	163
79016	HDR60	163
79017	HDRS72*	163
79018	HDRS84*	163
79019	HDRR24	163
79020	HDRR30	163
79021	HDRR36	163
79022	HDRR42	163
79023	HDRR48	163
79024	HDRR54	163
79025	HDRR60	163
79026	HDRRS72*	163
79027	HDRRS84*	163
79033	MMP-696	41
79034	MMP-1296	41
79035	MMP-696-S/S	42
79036	MMP-1296-S/S	42
79037	MMP-696P	43
79038	MMP-1296P	43
79039	QMT-S	47
79039	QMT-S	54
79039	QMT-S	80
79039	QMT-S	87
79040	MMP-1896	41
79041	SST2HD-G	120
79041	SST2HD-G	141
79042	SST2HD-G-S/S	122
79043	MHS-96	114
79044	MHS-96V	114
79045	MHS-96R	116
79046	MHS-96RV	116
79047	MHS-96P**	116
79048	MHS-96-S/S	118
79049	MHS-96V-S/S	118
79050	MHS-96R-S/S	118
79051	MHS-96RV-S/S	118
79052	MHSP-96	120
79053	MHSP96-S/S	122
79056	QMTS-S-S/S	48
79057	STS-G-S/S	122
79059	QMT-S-S/S	48
79060	DWP-96	141
79062	CDWB96	138
79063	MDWS-96	138
79064	MDWS-96P	138
79068	HTTS-HT	88
79070	SSTHK	120
79070	SSTHK	134
79070	SSTHK	141
79071	SSTHK-S/S	122
79072	HDRBK-HD	163
79073	PFS-ESAC	131
79080	LAGGING-TB	250
79091	EZAI-24I	190
79091	EZAI-24I	199
79091	EZAI-24I	202
79092	EZAI-30I	190

Index *by Item Code*

ITEM CODE	ORDERING NUMBER	PAGE
79092	EZAI-30I	199
79092	EZAI-30I	202
79093	EZAI-36I	190
79093	EZAI-36I	199
79093	EZAI-36I	202
79094	EZAI-42I	190
79094	EZAI-42I	199
79094	EZAI-42I	202
79095	EZAI-48I	190
79095	EZAI-48I	199
79095	EZAI-48I	202
79096	EZAI-54I	190
79096	EZAI-54I	199
79096	EZAI-54I	202
79097	EZAI-60I	190
79097	EZAI-60I	199
79097	EZAI-60I	202
79098	EZAI-72I	190
79098	EZAI-72I	199
79098	EZAI-72I	202
79099	LAGGING-TB2	250
79202	USTSCK	137
79204	USTSCKHD	137
79206	USPB2	137
79207	UHPB2	137
79224	CCKL	92
79224	CCKL	104
79224	CCKL	107
79224	CCKL	166
79225	CCKHDL	92
79225	CCKHDL	126
79225	CCKHDL	130
79225	CCKHDL	166
79228	CCKR	92
79228	CCKR	104
79228	CCKR	107
79228	CCKR	166
79229	CCKHDR	92
79229	CCKHDR	126
79229	CCKHDR	130
79229	CCKHDR	166
79232	CCKTS	92
79232	CCKTS	104
79232	CCKTS	107
79232	CCKTS	166
79233	CCKHDTS	92
79233	CCKHDTS	126
79233	CCKHDTS	130
79233	CCKHDTS	166
79236	HDRGEK	163
79299	USTSC	137
79299	USTSC	137
79300	USTSCHD	137
79300	USTSCHD	137
79303	INDR-1212	157
79304	INDR-1218	157
79305	INDR-1824	157
79306	INDR-2424	157
79307	INDR-1212S	157
79308	INDR-1218S	157
79309	INDR-1824S	157
79310	INDR-2424S	157
79311	IDSC-1212	157
79312	IDSC-1218	157
79313	IDSC-1824	157
79314	IDSC-2424	157
79315	IDSEAL	157
79316	IDHINGE	157
79317	IDLATCH	157
79318	EZIRMK	192
79320	UPFCC	113
79320	UPFCC	120
79323	HV2-18SS	78
79324	HV2-18S	78
79325	HV2-18M	78

ITEM CODE	ORDERING NUMBER	PAGE
79326	HV2-24SS	78
79327	HV2-24S	78
79328	HV2-24M	78
79329	HV2-30SS	78
79330	HV2-30S	78
79331	HV2-30M	78
79332	HV2-36SS	78
79333	HV2-36S	78
79334	HV2-36M	78
79335	HV2-36L	78
79336	HV2-42SS	78
79337	HV2-42S	78
79338	HV2-42M	78
79339	HV2-42L	78
79340	HV2-42LL	78
79341	HV2-48SS	78
79342	HV2-48S	78
79343	HV2-48M	78
79344	HV2-48L	78
79345	HV2-48LL	78
79346	HV2-54S	78
79347	HV2-54M	78
79348	HV2-54L	78
79349	HV2-54LL	78
79350	HV2-60S	78
79351	HV2-60M	78
79352	HV2-60L	78
79353	HV2-60LL	78
79354	HV2-72S	78
79355	HV2-72M	78
79356	HV2-72L	78
79357	HV2-72LL	78
79358	H2P18	80
79359	H2P24	80
79360	H2P30	80
79361	H2P36	80
79362	H2P42	80
79363	H2P48	80
79364	H2P54	80
79365	H2P60	80
79366	H2P72	80
79367	HV2T-S/S	78
79367	HV2T-S/S	80
79368	HV2PT	78
79368	HV2PT	80
79369	H2SA6SS	78
79369	H2SA6SS	80
79370	H2SA6S	78
79370	H2SA6S	80
79371	H2SA6M	78
79371	H2SA6M	80
79372	H2SA6L	78
79372	H2SA6L	80
79373	H2SA6LL	78
79373	H2SA6LL	80
79374	H2RC	80
79375	HV2SSTS	80
79378	MSR2	230
79378	MSR2	231
79379	MIB2-1U	201
79379	MIB2-1U	204
79380	PMSMK2	230
79380	PMSMK2	231
79381	MAK2	231
79382	MAKHD2	231
79383	CLN460/18.4-12S	249
79384	CLN600/24-12S	249
79385	CLN760/30.4-12S	249
79387	CLN900/36-12S	249
79388	CLN1060/42.4-12S	249
79389	CLN1200/48-12S	249
79390	CLN1360/54.4-12S	249
79392	CLN1520/60.8-12S	249
79395	CLN1800/72-12S	249
79398	CLN2100/84-12S	249

ITEM CODE	ORDERING NUMBER	PAGE
79406	CLFR460/18.4-12S	249
79407	CLFR600/24-12S	249
79408	CLFR760/30.4-12S	249
79410	CLFR900/36-12S	249
79411	CLFR1060/42.4-12S	249
79412	CLFR1200/48-12S	249
79413	CLFR1360/54.4-12S	249
79415	CLFR1520/60.8-12S	249
79418	CLFR1800/72-12S	249
79421	CLFR2100/84-12S	249
79431	MSTHD-W	111
79431	MSTHD-W	121
79432	MSTHD-S	111
79432	MSTHD-S	121
79433	MSTHD-B	111
79433	MSTHD-B	121
79434	MSTDB	108
79434	MSTDB	111
79434	MSTDB	115
79434	MSTDB	121
79434	MSTDB	155
79435	MSTAM	111
79435	MSTAM	121
79436	MST-MBL	111
79436	MST-MBL	121
79437	MST-MBR	111
79437	MST-MBR	121
79439	MSTCHD	111
79439	MSTCHD	121
79440	MSTBK	111
79440	MSTBK	121
79441	MSTGT	111
79441	MSTGT	121
79442	MHS-18V-MST	115
79443	MHS-24V-MST	115
79444	MHS-30V-MST	115
79445	MHS-36V-MST	115
79446	MHS-42V-MST	115
79447	MHS-48V-MST	115
79448	MHS-54V-MST	115
79449	MHS-60V-MST	115
79450	MHS-72V-MST	115
79451	MSTPMHD	111
79451	MSTPMHD	121
79453	UHVC	80
79481	RB38BP	170
79481	RB38BP	176
79481	RB38BP	177
79493	SSTLBK	112
79493	SSTLBK	120
79493	SSTLBK	122
79493	SSTLBK	141
79493	SSTLBK	151
79494	MBC-18	142
79495	MBC-24	142
79496	MBC-30	142
79497	MBC-36	142
79498	MBC-42	142
79499	MBC-48	142
79500	MBC-54	142
79501	MBC-60	142
79502	MBC-72	142
79503	MBC-84	142
79504	MBDS-18	144
79505	MBDS-24	144
79506	MBDS-30	144
79507	MBDS-36	144
79508	MBDS-42	144
79509	MBDS-48	144
79510	MBDS-54	144
79511	MBDS-60	144
79512	MBDS-72	144
79513	MBDS-84	144
79514	MBRD-18	142
79514	MBRD-18	144

ITEM CODE	ORDERING NUMBER	PAGE
79515	MBRD-24	142
79515	MBRD-24	144
79515	MBRD-24	145
79515	MBRD-24	147
79516	MBRD-30	142
79516	MBRD-30	144
79516	MBRD-30	145
79516	MBRD-30	147
79517	MBRD-36	142
79517	MBRD-36	144
79517	MBRD-36	145
79517	MBRD-36	147
79518	MBRD-42	142
79518	MBRD-42	144
79518	MBRD-42	145
79518	MBRD-42	147
79519	MBRD-48	142
79519	MBRD-48	144
79519	MBRD-48	145
79519	MBRD-48	147
79520	MBRD-54	142
79520	MBRD-54	144
79520	MBRD-54	145
79520	MBRD-54	147
79521	MBRD-60	142
79521	MBRD-60	144
79521	MBRD-60	145
79521	MBRD-60	147
79522	MBRD-72	142
79522	MBRD-72	144
79522	MBRD-72	145
79522	MBRD-72	147
79523	MBRD-84	142
79523	MBRD-84	144
79524	MBCMK	144
79525	MBCBC	144
79526	MBCB	144
79527	MBADB	144
79528	MBCBM	144
79529	MBCM-1	144
79530	MBCM-2	144
79531	MBCTA	144
79532	MBCBL	144
79533	MBCMKK	144
79534	MBCEC	144
79535	STLP	144
79536	MBCDBK	142
79536	MBCDBK	144
79536	MBCDBK	145
79536	MBCDBK	147
79536	MBCDBK	155
79571	MFASKHD	231
79572	YT-W*	94
79572	YT-W	96
79573	YT-P*	94
79573	YT-P	96
79574	YT-C*	94
79574	YT-C	96
79582	SSTHB	112
79582	SSTHB	120
79582	SSTHB	141
79582	SSTHB	151
79586	SSTHB-S/S	122
79587	YTP-18/450	96
79588	YTP-24/600	96
79589	YTP-30/750	96
79590	YTP-36/900	96
79591	YTP-42/1050	96
79592	YTP-48/1200	96
79593	YTA-18/450	96
79594	YTA-24/600	96
79595	YTA-30/750	96
79596	YTA-36/900	96
79597	YTA-42/1050	96
79598	YTA-48/1200	96

Index *by Item Code*

ITEM CODE	ORDERING NUMBER	PAGE
79611	YCART-18/450-W	94
79611	YCART-18/450-W	96
79612	YCART-24/600-W	94
79612	YCART-24/600-W	96
79613	YCART-30/750-W	94
79613	YCART-30/750-W	96
79614	YCART-36/900-W	94
79614	YCART-36/900-W	96
79615	YCART-42/1050-W	94
79615	YCART-42/1050-W	96
79616	YCART-48/1200-W	94
79616	YCART-48/1200-W	96
79617	YCART-18/450-P	94
79617	YCART-18/450-P	96
79618	YCART-24/600-P	94
79618	YCART-24/600-P	96
79619	YCART-30/750-P	94
79619	YCART-30/750-P	96
79620	YCART-36/900-P	94
79620	YCART-36/900-P	96
79621	YCART-42/1050-P	94
79621	YCART-42/1050-P	96
79622	YCART-48/1200-P	94
79622	YCART-48/1200-P	96
79623	YTAC	96
79624	MHS-18RMV	115
79625	MHS-24RMV	115
79626	MHS-30RMV	115
79627	MHS-36RMV	115
79628	MHS-42RMV	115
79629	MHS-48RMV	115
79630	MHS-54RMV	115
79631	MHS-60RMV	115
79632	MHS-72RMV	115
79637	FMS-18	108
79638	FMS-24	108
79639	FMS-30	108
79640	FMS-36	108
79641	FMS-42	108
79642	FMS-48	108
79643	FMS-54	108
79644	FMS-60	108
79645	FMS-72	108
79646	FMS-18V	108
79647	FMS-24V	108
79648	FMS-30V	108
79649	FMS-36V	108
79650	FMS-42V	108
79651	FMS-48V	108
79652	FMS-54V	108
79653	FMS-60V	108
79654	FMS-72V	108
79656	PACB100	121
79656	PACB100	141
79656	PACB100	151
79665	PTMHD54VR	227
79666	PTMHD60VR	227
79667	PTMHD72VR	227
79668	PTMHD84VR	227
79669	PTM24VR	227
79670	PTM30VR	227
79671	PTM36VR	227
79672	PTM42VR	227
79673	PTM48VR	227
79674	PTM54VR	227
79675	PTM60VR	227
79676	YT-HDW*	98
79676	YT-HDW	100
79677	YT-HDP*	98
79677	YT-HDP	100
79699	FMSC	111
79699	FMSC	112
79728	YT-HDC*	98
79728	YT-HDC	100
79738	MHS-24RU	113
79739	MHS-30RU	113
79740	MHS-36RU	113
79741	MHS-42RU	113
79742	MHS-48RU	113
79743	MHS-54RU	113
79744	MHS-60RU	113
79745	MHS-72RU	113
79746	MHS-84RU	113
79747	MHS-96RU	113
79748	MHS-18RUV	113
79749	MHS-24RUV	113
79750	MHS-30RUV	113
79751	MHS-36RUV	113
79752	MHS-42RUV	113
79753	MHS-48RUV	113
79754	MHS-54RUV	113
79755	MHS-60RUV	113
79756	MHS-72RUV	113
79757	MHS-84RUV	113
79758	MHS-96RUV	113
79759	YT-TC-18S	93
79760	YT-TC-24S	93
79761	YT-TC-30S	93
79762	YT-TC-36S	93
79763	YT-TC-42S	93
79764	YT-TC-48S	93
79765	YT-18S	93
79766	YT-24S	93
79767	YT-30S	93
79768	YT-36S	93
79769	YT-42S	93
79770	YT-48S	93
79771	YTW-18S	93
79772	YTW-24S	93
79773	YTW-30S	93
79774	YTW-36S	93
79775	YTW-42S	93
79776	YTW-48S	93
79777	YTHD-TC-36S	97
79778	YTHD-TC-42S	97
79779	YTHD-TC-48S	97
79780	YTHD-TC-54S	97
79781	YTHD-TC-60S	97
79782	YTHD-TC-72S	97
79783	YTHD-36S	97
79784	YTHD-42S	97
79785	YTHD-48S	97
79786	YTHD-54S	97
79787	YTHD-60S	97
79788	YTHD-72S	97
79789	YTHDW-36S	97
79790	YTHDW-42S	97
79791	YTHDW-48S	97
79792	YTHDW-54S	97
79793	YTHDW-60S	97
79794	YTHDW-72S	97
79795	YSTS-Y	96
79796	YSTS-P	96
79797	YSTHDS-GR	100
79798	YSTHDS-BL	100
79799	YTPHD-36/900	100
79800	YTPHD-42/1050	100
79801	YTPHD-48/1200	100
79802	YTPHD-54/1350	100
79803	YTPHD-60/1500	100
79804	YTPHD-72/1800	100
79805	YTAHD-36/900	100
79806	YTAHD-42/1050	100
79807	YTAHD-48/1200	100
79808	YTAHD-54/1350	100
79809	YTAHD-60/1500	100
79810	YTAHD-72/1800	100
79811	YCART-18/450-TC	94
79811	YCART-18/450-TC	96
79812	YCART-24/600-TC	94
79812	YCART-24/600-TC	96
79813	YCART-30/750-TC	94
79813	YCART-30/750-TC	96
79814	YCART-36/900-TC	94
79814	YCART-36/900-TC	96
79815	YCART-42/1050-TC	94
79815	YCART-42/1050-TC	96
79816	YCART-48/1200-TC	94
79816	YCART-48/1200-TC	96
79817	YCART-36/900-HDP	98
79817	YCART-36/900-HDP	100
79818	YCART-42/1050-HDP	98
79818	YCART-42/1050-HDP	100
79819	YCART-48/1200-HDP	98
79819	YCART-48/1200-HDP	100
79820	YCART-54/1350-HDP	98
79820	YCART-54/1350-HDP	100
79821	YCART-60/1500-HDP	98
79821	YCART-60/1500-HDP	100
79822	YCART-72/1800-HDP	98
79822	YCART-72/1800-HDP	100
79823	YCART-36/900-HDW	98
79823	YCART-36/900-HDW	100
79824	YCART-42/1050-HDW	98
79824	YCART-42/1050-HDW	100
79825	YCART-48/1200-HDW	98
79825	YCART-48/1200-HDW	100
79826	YCART-54/1350-HDW	98
79826	YCART-54/1350-HDW	100
79827	YCART-60/1500-HDW	98
79827	YCART-60/1500-HDW	100
79828	YCART-72/1800-HDW	98
79828	YCART-72/1800-HDW	100
79829	YCART-36/900-HDTC	98
79829	YCART-36/900-HDTC	100
79830	YCART-42/1050-HDTC	98
79830	YCART-42/1050-HDTC	100
79831	YCART-48/1200-HDTC	98
79831	YCART-48/1200-HDTC	100
79832	YCART-54/1350-HDTC	98
79832	YCART-54/1350-HDTC	100
79833	YCART-60/1500-HDTC	98
79833	YCART-60/1500-HDTC	100
79834	YCART-72/1800-HDTC	98
79834	YCART-72/1800-HDTC	100
79835	YTACHD	100
79836	YST-Y	96
79837	YST-P	96
79838	YST-S	96
79839	YSTHD-GR	100
79840	YSTHD-S	100
79841	YSTHD-BL	100
79842	YSTHD-BK	100
79843	YSTMB	96
79844	YSTDBK	93
79844	YSTDBK	96
79844	YSTDBK	155
79845	YSTGBK	96
79846	YSTLBK	96
79847	YSTTBK-W	96
79848	YSTPMK	96
79849	YSTHDMB	100
79850	YSTHDDBK	97
79850	YSTHDDBK	100
79850	YSTHDDBK	155
79851	YSTHDGBK	100
79852	YSTHDLBK	100
79853	YSTHDBK-W	100
79854	YSTPHDMK	100
79855	YSTTBK-B	96
79856	YSTHDBK-B	100
79857	YSTANK	96
79858	YSTANKHD	100
79861	RBSE-10	175
79862	RBSE-16	175
79863	RBSE-22	175
79864	RBSE-28	175
79865	RBSE-34	175
79866	RBSE-40	175
79867	RBSE-46	175
79868	RBSE-52	175
79869	RBSE-58	175
79870	RBSE-64	175
79871	RBSE-70	175
79874	RRTD6-24	189
79875	RRTD6-30	189
79876	RRTD6-36	189
79877	RRTD6-42	189
79878	RRTD6-48	189
79879	RRTD6-54	189
79880	RRTD6-60	189
79881	RRTD6-72	189
79883	RRTID6-24	192
79883	RRTID6-24	201
79884	RRTID6-30	192
79884	RRTID6-30	201
79885	RRTID6-36	192
79885	RRTID6-36	201
79886	RRTID6-42	192
79886	RRTID6-42	201
79887	RRTID6-48	192
79887	RRTID6-48	201
79888	RRTID6-54	192
79888	RRTID6-54	201
79889	RRTID6-60	192
79889	RRTID6-60	201
79890	RRTID6-72	192
79890	RRTID6-72	201
79891	JNK-A	19
79892	JNK-B	29
79893	JNK-C	39
79893	JNK-C	47
79893	JNK-C	54
79893	JNK-C	80
79893	JNK-C	87
79893	JNK-C	120
79893	JNK-C	137
79893	JNK-C	141
79894	JNK-D	61
79894	JNK-D	68
79894	JNK-D	73
79896	JNK-F	137
79908	MIB2-1UF	201
79908	MIB2-1UF	204
79914	MBC-18-575V	142
79915	MBC-24-575V	142
79916	MBC-30-575V	142
79917	MBC-36-575V	142
79918	MBC-42-575V	142
79919	MBC-48-575V	142
79920	MBC-54-575V	142
79921	MBC-60-575V	142
79922	MBC-72-575V	142
79923	MBC-84-575V	142
79924	MBCM-575-1	144
79925	MBCM-575-2	144
79936	CBS18SF	149
79937	CBS24SF	149
79938	CBS30SF	149
79939	CBS36SF	149
79940	CBS42SF	149
79941	CBS48SF	149
79942	CBS54SF	149
79943	CBS60SF	149
79944	CBS72SF	149
79945	CBS84SF	149
79946	CBS96SF	149
79947	CBSBLD18F	149
79947	CBSBLD18F	151
79947	CBSBLD18F	154

Index *by Item Code*

ITEM CODE	ORDERING NUMBER	PAGE	ITEM CODE	ORDERING NUMBER	PAGE	ITEM CODE	ORDERING NUMBER	PAGE	ITEM CODE	ORDERING NUMBER	PAGE
79948	CBSBLD24F	149	90000	AWTPBA	68	90084	RWPREC-1272	152	90234	SE6-VR54	230
79948	CBSBLD24F	151	90000	AWTPBA	73	90085	RWPREC-1284	152	90235	SE6-VR60	230
79948	CBSBLD24F	154	90001	PTM24T-S/S	228	90086	RWPREC-1296	152	90236	SE6-VR72	230
79949	CBSBLD30F	149	90002	PTM30T-S/S	228	90087	RWPBLD-18	153	90237	MIB24CSK	201
79949	CBSBLD30F	151	90003	PTM36T-S/S	228	90088	RWPBLD-24	153	90237	MIB24CSK	204
79949	CBSBLD30F	154	90004	PTM42T-S/S	228	90089	RWPBLD-30	153	90238	MIB30CSK	201
79950	CBSBLD36F	149	90005	PTM48T-S/S	228	90090	RWPBLD-36	153	90238	MIB30CSK	204
79950	CBSBLD36F	151	90006	PTM54T-S/S	228	90091	RWPBLD-42	153	90239	MIB36CSK	201
79950	CBSBLD36F	154	90007	PTM60T-S/S	228	90092	RWPBLD-48	153	90239	MIB36CSK	204
79951	CBSBLD42F	149	90008	PTMHD54T-S/S	228	90093	RWPBLD-54	153	90240	MIB42CSK	201
79951	CBSBLD42F	151	90009	PTMHD60T-S/S	228	90094	RWPBLD-60	153	90240	MIB42CSK	204
79951	CBSBLD42F	154	90010	PTMHD72T-S/S	228	90095	RWPBLD-66	153	90241	MIB48CSK	201
79952	CBSBLD48F	149	90011	PTMHD84T-S/S	228	90096	RWPBLD-72	153	90241	MIB48CSK	204
79952	CBSBLD48F	151	90012	PTM24R-S/S	228	90097	RWPBLD-78	153	90242	MIB54CSK	201
79952	CBSBLD48F	154	90013	PTM30R-S/S	228	90098	RWPBLD-84	153	90242	MIB54CSK	204
79953	CBSBLD54F	149	90014	PTM36R-S/S	228	90099	RWPBLD-90	153	90243	MIB60CSK	201
79953	CBSBLD54F	151	90015	PTM42R-S/S	228	90100	PTS-DRK	225	90243	MIB60CSK	204
79953	CBSBLD54F	154	90016	PTM48R-S/S	228	90101	CBSBP18F	151	90244	MIB72CSK	201
79954	CBSBLD60F	149	90017	PTM54R-S/S	228	90102	CBSBP24F	151	90244	MIB72CSK	204
79954	CBSBLD60F	151	90018	PTM60R-S/S	228	90103	CBSBP30F	151	90245	MIB24WPK	201
79954	CBSBLD60F	154	90019	PTMHD54R-S/S	228	90104	CBSBP36F	151	90245	MIB24WPK	204
79955	CBSBLD72F	149	90020	PTMHD60R-S/S	228	90105	CBSBP42F	151	90246	MIB30WPK	201
79955	CBSBLD72F	151	90021	PTMHD72R-S/S	228	90106	CBSBP48F	151	90246	MIB30WPK	204
79955	CBSBLD72F	154	90022	PTMHD84R-S/S	228	90107	CBSBP54F	151	90247	MIB36WPK	201
79956	CBSBLD84F	149	90023	PTM24VR-S/S	228	90108	CBSBP60F	151	90247	MIB36WPK	204
79956	CBSBLD84F	151	90024	PTM30VR-S/S	228	90109	CBSBP72F	151	90248	MIB42WPK	201
79956	CBSBLD84F	154	90025	PTM36VR-S/S	228	90110	CBSBP84F	151	90248	MIB42WPK	204
79957	CBSBLD96F	149	90026	PTM42VR-S/S	228	90111	CBSBP96F	151	90249	MIB48WPK	201
79957	CBSBLD96F	151	90027	PTM48VR-S/S	228	90147	MMP-6108	41	90249	MIB48WPK	204
79957	CBSBLD96F	154	90028	PTM54VR-S/S	228	90148	MMP-6120	41	90250	MIB54WPK	201
79958	CBS18PF	149	90029	PTM60VR-S/S	228	90149	MMP-12108	41	90250	MIB54WPK	204
79959	CBS24PF	149	90030	PTMHD54VR-S/S	228	90150	MMP-12120	41	90251	MIB60WPK	201
79960	CBS30PF	149	90031	PTMHD60VR-S/S	228	90151	MHP-6108	55	90251	MIB60WPK	204
79961	CBS36PF	149	90032	PTMHD72VR-S/S	228	90152	MHP-6120	55	90252	MIB72WPK	201
79962	CBS42PF	149	90033	PTMHD84VR-S/S	228	90153	MHP-12108	55	90252	MIB72WPK	204
79963	CBS48PF	149	90034	PTMSD72T-S/S	228	90154	MHP-12120	55	90253	MIB24CPK	204
79964	CBS54PF	149	90035	PTMSD84T-S/S	228	90155	MHP-18108	55	90254	MIB30CPK	204
79965	CBS60PF	149	90036	PTMSD96T-S/S	228	90156	MHP-18120	55	90255	MIB36CPK	204
79966	CBS72PF	149	90037	PTMSD120T-S/S	228	90157	MHP-24108	55	90256	MIB42CPK	204
79967	CBS84PF	149	90038	PTMSD72R-S/S	228	90158	MHP-24120	55	90257	MIB48CPK	204
79968	CBS96PF	149	90039	PTMSD84R-S/S	228	90159	MHP-6108P	56	90258	MIB54CPK	204
79970	SB2	201	90040	PTMSD96R-S/S	228	90160	MHP-6120P	56	90259	MIB60CPK	204
79970	SB2	204	90041	PTMSD120R-S/S	228	90161	MHP-12108P	56	90260	MIB72CPK	204
79971	MIB24-2H	202	90042	PTMSD72VR-S/S	228	90162	MHP-12120P	56	90261	EZCRMK54-60	192
79972	MIB30-2H	202	90043	PTMSD84VR-S/S	228	90163	MHP-18108P	56	90262	EZCRMK72	192
79973	MIB36-2H	202	90044	PTMSD96VR-S/S	228	90164	MHP-18120P	56	90264	ESBK-ATEX	19
79974	MIB42-2H	202	90045	PTMSD120VR-S/S	228	90165	MHP-24108P	56	90265	PTEZ-18	219
79975	MIB48-2H	202	90046	MSR2-S/S	232	90166	MHP-24120P	56	90266	PTEZ-24	219
79976	MIB54-2H	202	90047	PMSMK2-S/S	232	90185	PTMAFMKT	230	90267	PTEZ-30	219
79977	MIB60-2H	202	90048	MAK2-S/S	232	90186	PTMAFMKR	230	90268	PTEZ-36	219
79978	MIB72-2H	202	90049	MAKHD2-S/S	232	90187	PTMAFMKHDR	230	90269	PTEZ-42	219
79979	MSB24-2I	199	90050	MFASKHD-S/S	232	90188	PTMAEKT	230	90270	PTEZ-48	219
79980	MSB30-2I	199	90051	PTMSD72VR	227	90189	PTMAEKR	230	90283	SKPU-6X1/2X25	238
79981	MSB36-2I	199	90052	PTMSD84VR	227	90190	PTMAEKVR	230	90284	SKPU-6X3/4X25	238
79982	MSB42-2I	199	90053	PTMSD96VR	227	90191	PTMAEKHDT	230	90285	SKPU-8X1/2X25	238
79983	MSB48-2I	199	90054	PTMSD120VR	227	90192	PTMAEKHDR	230	90286	SKPU-8X3/4X25	238
79984	MSB54-2I	199	90055	MSRSD-S/S	232	90193	PTMAEKHDVR	230	90319	SE6-VR84	230
79985	MSB60-2I	199	90056	PMSMKSD-S/S	232	90194	PTMAAK	230	90326	MMPCP108	47
79986	MSB72-2I	199	90057	MAKSD-S/S	232	90195	PTMAAKHD	230	90326	MMPCP108	61
79987	MSBRMK	201	90068	RWPREC-624	152	90196	PTMAFASK	230	90327	MMPCP120	47
79988	SB2F	201	90069	RWPREC-630	152	90197	PTMAORK	230	90327	MMPCP120	61
79988	SB2F	204	90070	RWPREC-636	152	90220	SE6-R36	230	90351	PTEZMB	219
79989	SHIM-KITMOD	201	90071	RWPREC-642	152	90221	SE6-R42	230	90352	PTEZPB	219
79989	SHIM-KITMOD	204	90072	RWPREC-648	152	90222	SE6-R48	230	90353	PTEZDC	219
79991	MSB24RMK	199	90073	RWPREC-654	152	90223	SE6-R54	230	90358	TRB96	45
79992	MSB30RMK	199	90074	RWPREC-660	152	90224	SE6-R60	230	90358	TRB96	52
79993	MSB36RMK	199	90075	RWPREC-672	152	90225	SE6-R72	230	90359	TRB102	45
79994	MSB42RMK	199	90076	RWPREC-684	152	90226	SE6-R84	230	90359	TRB102	52
79995	MSB48RMK	199	90077	RWPREC-696	152	90227	SE6-T36	230	90360	TRB108	45
79996	MSB54RMK	199	90078	RWPREC-1230	152	90228	SE6-T42	230	90360	TRB108	52
79997	MSB60RMK	199	90079	RWPREC-1236	152	90229	SE6-T48	230	90361	TRB114	45
79998	MSB72RMK	199	90080	RWPREC-1242	152	90230	SE6-T54/VR36	230	90361	TRB114	52
90000	AWTPBA	47	90081	RWPREC-1248	152	90231	SE6-T60/VR42	230	90362	PTMA36T	226
90000	AWTPBA	54	90082	RWPREC-1254	152	90232	SE6-T72/VR48	230	90363	PTMA42T	226
90000	AWTPBA	61	90083	RWPREC-1260	152	90233	SE6-T84	230	90364	PTMA48T	226

Index *by Item Code*

ITEM CODE	ORDERING NUMBER	PAGE
90365	PTMA54T	226
90366	PTMA60T	226
90367	PTMA36R	226
90368	PTMA42R	226
90369	PTMA48R	226
90370	PTMA54R	226
90371	PTMA60R	226
90372	PTMA36VR	226
90373	PTMA42VR	226
90374	PTMA48VR	226
90375	PTMA54VR	226
90376	PTMA60VR	226
90377	PTMAHD54T	226
90378	PTMAHD60T	226
90379	PTMAHD72T	226
90380	PTMAHD84T	226
90381	PTMAHD54R	226
90382	PTMAHD60R	226
90383	PTMAHD72R	226
90384	PTMAHD84R	226
90385	PTMAHD54VR	226
90386	PTMAHD60VR	226
90387	PTMAHD72VR	226
90388	PTMAHD84VR	226
90389	MMP-6108P	43
90390	MMP-6120P	43
90391	MMP-12108P	43
90392	MMP-12120P	43
90393	MXP-642	74
90394	MXP-648	74
90395	MXP-654	74
90396	MXP-660	74
90397	MXP-672	74
90398	MXP-684	74
90399	MXP-696	74
90400	MXP-6120	74
90409	USB12	74
90409	USB12	77
90410	USB6	74
90410	USB6	77
90411	USBP	77
90412	USBBRP	77
90434	EZCRMK24-48	192
90435	QMT-ATEX	39
90537	CBCS18	148
90538	CBCS24	148
90539	CBCS30	148
90540	CBCS36	148
90541	CBCS42	148
90542	CBCS48	148
90543	CBCS54	148
90544	CBCS60	148
90554	CBCS72	148
90555	CBCS84	148
90581	MXP-1242	74
90582	MXP-1248	74
90583	MXP-1254	74
90584	MXP-1260	74
90585	MXP-1272	74
90586	MXP-1284	74
90587	MXP-1296	74
90588	MXP-12120	74
90589	MXPP-642	77
90590	MXPP-648	77
90591	MXPP-654	77
90592	MXPP-660	77
90593	MXPP-672	77
90594	MXPP-684	77
90595	MXPP-696	77
90596	MXPP-6120	77
90598	MXPPE	77
90599	XDSTMPK	77
90600	XDSTPAK	77
90601	XDSTS-W	77
90602	XDSTS-P	77

ITEM CODE	ORDERING NUMBER	PAGE
90603	XDSTS-B	77
90604	XDSTBK-W	77
90605	XDSTBK-P	77
90606	XDSTBK-B	77
90607	MXPPBK	77
90608	XDSTPSBK	77
90609	XDSTTAK	77
90610	XDSTJNK	77
90611	XDST-W	77
90612	XDST-P	77
90613	XDST-B	77
90614	RBDT-6C	180
90615	RBDTXHD-13C	181
90616	PTEZHD-42/1050	219
90617	PTEZHD-48/1200	219
90618	PTEZHD-54/1350	219
90619	PTEZHD-60/1500	219
90620	PTEZHD-72/1800	219
90621	PTEZHD-84/2100	219
90622	MXPP-1242	77
90623	MXPP-1248	77
90624	MXPP-1254	77
90625	MXPP-1260	77
90626	MXPP-1272	77
90627	MXPP-1284	77
90628	MXPP-1296	77
90629	MXPP-12120	77
90631	CRDF18	148
90632	CRDF24	148
90633	CRDF30	148
90634	CRDF36	148
90635	CRDF42	148
90636	CRDF48	148
90637	CRDF54	148
90638	CRDF60	148
90639	CRDF72	148
90640	CRDF84	148
90641	CBC3R	148
90642	MXP-6108	74
90643	MXP-12108	74
90644	MXPP-6108	77
90645	MXPP-12108	77
90646	RBP1R-S	216
90647	RBP1R-M	216
90648	RBP1R-L	216
90649	RBP1R-XL	216
90650	RBPRR-S	218
90651	RBPRR-M	218
90652	RBPRR-L	218
90653	RBPRR-XL	218
90762	CBC72	148
90763	CBC84	148
90795	PTEZHD-56/1400	219
90796	PTEZHD-64/1600	219
90797	PTEZHD-80/2000	219
90798	PTEZHD-42/1050-UG	219
90799	PTEZHD-48/1200-UG	219
90800	PTEZHD-54/1350-UG	219
90801	PTEZHD-60/1500-UG	219
90802	PTEZHD-72/1800-UG	219
90803	PTEZHD-MBK	219
90804	PTEZHD-PBK	219
90805	PTEZHD-DCK	219
90806	PTEZHD-WRBK	219
90807	PTEZHD-JBBK	219
90814	EST-A-P	19
90815	EST-A-S	19
90816	EST-A-B	19
90935	RBQB1-16/400	171
90936	RBQB1-18/450	171
90937	RBQB1-22/550	171
90938	RBQB1-24/600	171
90939	RBQB1-28/700	171
90940	RBQB1-30/750	171
90941	RBQB1-34/850	171

ITEM CODE	ORDERING NUMBER	PAGE
90942	RBQB1-36/900	171
90943	RBQB1-40/1000	171
90944	RBQB1-42/1050	171
90945	RBQB1-46/1150	171
90946	RBQB1-48/1200	171
90947	RBQB1-52/1300	171
90948	RBQB1-54/1350	171
90949	RBQB1-58/1450	171
90950	RBQB1-60/1500	171
90951	RBQB1-64/1600	171
90952	RBQB1-70/1750	171
90953	RBQB1-72/1800	171
90954	QB1PCK	171
91214	RWPREC-1836	152
91215	RWPREC-1842	152
91216	RWPREC-1848	152
91217	RWPREC-1854	152
91218	RWPREC-1860	152
91219	RWPREC-1872	152
91220	RWPREC-1884	152
91221	RWPREC-1896	152
91222	SKPU-6X1/2X50	238
91223	SKPU-6X3/4X50	238
91224	SKPU-8X1/2X50	238
91225	SKPU-8X3/4X50	238
91226	EZP1-UHT212	14
91227	EZP1-UHT218	14
91228	EZP1-UHT224	14
91229	EZP1-UHT230	14
91230	EZP1-UHT236	14
91231	EZP1-UHT242	14
91232	EZP1-UHT248	14
91233	EZP1-UHT254	14
91234	EZP1-UHT260	14
91235	EZP1-UHT272	14
91236	EZP1-UHT818	14
91237	EZP1-UHT824	14
91238	EZP1-UHT830	14
91239	EZP1-UHT836	14
91240	EZP1-UHT842	14
91241	EZP1-UHT848	14
91242	EZP1-UHT854	14
91243	EZP1-UHT860	14
91244	EZP1-UHT872	14
91245	EZP1-UHT1424	14
91246	EZP1-UHT1430	14
91247	EZP1-UHT1436	14
91248	EZP1-UHT1442	14
91249	EZP1-UHT1448	14
91250	EZP1-UHT1454	14
91251	EZP1-UHT1460	14
91252	EZP1-UHT1472	14
91253	CRB-UHT10	16
91253	CRB-UHT10	37
91254	CRB-UHT16	16
91254	CRB-UHT16	37
91255	CRB-UHT22	16
91255	CRB-UHT22	37
91256	CRB-UHT28	16
91256	CRB-UHT28	37
91257	CRB-UHT34	16
91257	CRB-UHT34	37
91258	CRB-UHT40	16
91258	CRB-UHT40	37
91259	CRB-UHT46	16
91259	CRB-UHT46	37
91260	CRB-UHT52	16
91260	CRB-UHT52	37
91261	CRB-UHT58	16
91261	CRB-UHT58	37
91262	CRB-UHT64	16
91262	CRB-UHT64	37
91263	CRB-UHT70	16
91263	CRB-UHT70	37
91264	MSP-UHT224	35

ITEM CODE	ORDERING NUMBER	PAGE
91265	MSP-UHT230	35
91266	MSP-UHT236	35
91267	MSP-UHT242	35
91268	MSP-UHT248	35
91269	MSP-UHT254	35
91270	MSP-UHT260	35
91271	MSP-UHT272	35
91272	MSP-UHT824	35
91273	MSP-UHT830	35
91274	MSP-UHT836	35
91275	MSP-UHT842	35
91276	MSP-UHT848	35
91277	MSP-UHT854	35
91278	MSP-UHT860	35
91279	MSP-UHT872	35
91280	MSP-UHT1442	35
91281	MSP-UHT1448	35
91282	MSP-UHT1454	35
91283	MSP-UHT1460	35
91284	MSP-UHT1472	35
91285	QMT-A-P	39
91286	QMT-A-W	39
91288	SKPU-4X3/8X25	238
91289	SKPU-4X1/2X25	238
91290	SKPU-4X5/8X25	238
91291	SKPU-4X3/4X25	238
91292	SKPU-4X1X25	238
91293	SKPU-4X3/8X50	238
91294	SKPU-4X1/2X50	238
91295	SKPU-4X5/8X50	238
91296	SKPU-4X3/4X50	238
91297	SKPU-4X1X50	238
91298	SKPU-6X3/8X25	238
91299	SKPU-6X5/8X25	238
91300	SKPU-6X1X25	238
91301	SKPU-6X3/8X50	238
91302	SKPU-6X5/8X50	238
91303	SKPU-6X1X50	238
91304	SKPU-8X3/8X25	238
91305	SKPU-8X5/8X25	238
91306	SKPU-8X1X25	238
91307	SKPU-8X3/8X50	238
91308	SKPU-8X5/8X50	238
91309	SKPU-8X1X50	238
91310	SKPU-10X3/8X25	238
91311	SKPU-10X1/2X25	238
91312	SKPU-10X5/8X25	238
91313	SKPU-10X3/4X25	238
91314	SKPU-10X1X25	238
91315	SKPU-10X3/8X50	238
91316	SKPU-10X1/2X50	238
91317	SKPU-10X5/8X50	238
91318	SKPU-10X3/4X50	238
91319	SKPU-10X1X50	238
91320	SKPU-12X3/8X25	238
91321	SKPU-12X1/2X25	238
91322	SKPU-12X5/8X25	238
91323	SKPU-12X3/4X25	238
91324	SKPU-12X1X25	238
91325	SKPU-12X3/8X50	238
91326	SKPU-12X1/2X50	238
91327	SKPU-12X5/8X50	238
91328	SKPU-12X3/4X50	238
91329	SKPU-12X1X50	238
91347	MHP-EPHD-54	54
91347	MHP-EPHD-54	68
91400	SKPU-DUAL-6X1/2X25	239
91401	SKPU-DUAL-6X3/4X25	239
91402	SKPU-DUAL-8X1/2X25	239
91403	SKPU-DUAL-8X3/4X25	239
91404	SKPU-DUAL-6X1/2X50	239
91405	SKPU-DUAL-6X3/4X50	239
91406	SKPU-DUAL-8X1/2X50	239
91407	SKPU-DUAL-8X3/4X50	239
91408	SSTXD-W	112

Index *by Item Code*

ITEM CODE	ORDERING NUMBER	PAGE	ITEM CODE	ORDERING NUMBER	PAGE	ITEM CODE	ORDERING NUMBER	PAGE	ITEM CODE	ORDERING NUMBER	PAGE
91408	SSTXD-W	151	91669	ES54-4-SF	233	91744	DC-72	234	91836	LA-60	237
91409	SSTXD-S	112	91670	ES60-4-SF	233	91745	DC-84	234	91837	LA-66	237
91409	SSTXD-S	151	91671	ES66-4-SF	233	91746	DC-96	234	91838	LA-72	237
91410	SSTXD-B	112	91672	ES72-4-SF	233	91747	SP-24	234	91839	LA-84	237
91410	SSTXD-B	151	91673	ES84-4-SF	233	91748	SP-48	234	91840	LA-96	237
91411	SSTXD-G	151	91674	ES96-4-SF	233	91749	SP-72	234	91841	SL-48	237
91412	SSTXDMK	112	91675	ES48-4-TN	233	91750	SP-96	234	91841	SL-48	243
91412	SSTXDMK	151	91676	ES54-4-TN	233	91751	SKC-24	237	91842	TL-48	237
91413	SATXDPAT	151	91677	ES60-4-TN	233	91752	SKC-30	237	91842	TL-48	243
91414	SATXDNCB	151	91678	ES66-4-TN	233	91753	SKC-36	237	91865	TRB-UHT18	45
91415	SAT2MK	151	91679	ES72-4-TN	233	91754	SKC-42	237	91865	TRB-UHT18	52
91417	RWSECS-18F	154	91680	ES84-4-TN	233	91755	SKC-48	237	91866	TRB-UHT24	45
91418	RWSECS-24F	154	91681	ES96-4-TN	233	91756	SKC-54	237	91866	TRB-UHT24	52
91419	RWSECS-30F	154	91682	ES48-4-TF	233	91757	SKC-60	237	91867	TRB-UHT30	45
91420	RWSECS-36F	154	91683	ES54-4-TF	233	91758	SKC-66	237	91867	TRB-UHT30	52
91421	RWSECS-42F	154	91684	ES60-4-TF	233	91759	SKC-72	237	91868	TRB-UHT36	45
91422	RWSECS-48F	154	91685	ES66-4-TF	233	91760	SKC-84	237	91868	TRB-UHT36	52
91423	RWSECS-54F	154	91686	ES72-4-TF	233	91761	SKC-96	237	91869	TRB-UHT42	45
91424	RWSECS-60F	154	91687	ES84-4-TF	233	91762	LA-24	237	91869	TRB-UHT42	52
91425	RWSECS-72F	154	91688	ES96-4-TF	233	91763	LA-30	237	91870	TRB-UHT48	45
91426	RWSECS-84F	154	91689	ES24-8-SN	233	91764	LA-36	237	91870	TRB-UHT48	52
91427	RWSECS-96F	154	91690	ES30-8-SN	233	91765	LA-42	237	91871	TRB-UHT54	45
91430	FLXCP	134	91691	ES36-8-SN	233	91766	LA-48	237	91871	TRB-UHT54	52
91431	FLXEP	134	91692	ES42-8-SN	233	91798	YTR-18S	93	91872	TRB-UHT60	45
91432	CBSP18	151	91693	ES48-8-SN	233	91799	YTR-24S	93	91872	TRB-UHT60	52
91433	CBSP24	151	91694	ES54-8-SN	233	91800	YTR-30S	93	91873	TRB-UHT66	45
91434	CBSP30	151	91695	ES60-8-SN	233	91801	YTR-36S	93	91873	TRB-UHT66	52
91435	CBSP36	151	91696	ES66-8-SN	233	91802	YTR-42S	93	91874	TRB-UHT72	45
91436	CBSP42	151	91697	ES72-8-SN	233	91803	YTR-48S	93	91874	TRB-UHT72	52
91437	CBSP48	151	91698	ES84-8-SN	233	91804	YT-R*	94	91875	TRB-UHT78	45
91438	CBSP54	151	91699	ES96-8-SN	233	91804	YT-R	96	91875	TRB-UHT78	52
91439	CBSP60	151	91700	ES24-8-SF	233	91805	YCART-18/450-R	94	91876	TRB-UHT84	45
91440	CBSP72	151	91701	ES30-8-SF	233	91805	YCART-18/450-R	96	91876	TRB-UHT84	52
91441	CBSP84	151	91702	ES36-8-SF	233	91806	YCART-24/600-R	94	91877	TRB-UHT90	45
91442	CBSP96	151	91703	ES42-8-SF	233	91806	YCART-24/600-R	96	91877	TRB-UHT90	52
91571	MBC-18-S	142	91704	ES48-8-SF	233	91807	YCART-30/750-R	94	91918	MMPCP48UG	54
91572	MBC-24-S	142	91705	ES54-8-SF	233	91807	YCART-30/750-R	96	91918	MMPCP48UG	68
91573	MBC-30-S	142	91706	ES60-8-SF	233	91808	YCART-36/900-R	94	91919	MMPCP54UG	54
91574	MBC-36-S	142	91707	ES66-8-SF	233	91808	YCART-36/900-R	96	91919	MMPCP54UG	68
91575	MBC-42-S	142	91708	ES72-8-SF	233	91809	YCART-42/1050-R	94	91920	MMPCP60UG	54
91576	MBC-48-S	142	91709	ES84-8-SF	233	91809	YCART-42/1050-R	96	91920	MMPCP60UG	68
91577	MBC-54-S	142	91710	ES96-8-SF	233	91810	YCART-48/1200-R	94	91921	MMPCP72UG	54
91578	MBC-60-S	142	91711	ES48-8-TN	233	91810	YCART-48/1200-R	96	91921	MMPCP72UG	68
91579	MBC-72-S	142	91712	ES54-8-TN	233	91811	YSTGBK-R	96	91922	MMPCP84UG	54
91580	MBC-84-S	142	91713	ES60-8-TN	233	91812	YSTLBK-R	96	91922	MMPCP84UG	68
91581	MBC-18-575V-S	142	91714	ES66-8-TN	233	91813	YSTBKPU-R	96	91923	MMPCP96UG	54
91582	MBC-24-575V-S	142	91715	ES72-8-TN	233	91814	YST-Y-R	96	91923	MMPCP96UG	68
91583	MBC-30-575V-S	142	91716	ES84-8-TN	233	91815	YST-P-R	96	91924	MMPCP108UG	54
91584	MBC-36-575V-S	142	91717	ES96-8-TN	233	91816	YTHDR-36S	97	91924	MMPCP108UG	68
91585	MBC-42-575V-S	142	91718	ES48-8-TF	233	91817	YTHDR-42S	97	91925	MMPCP120UG	54
91586	MBC-48-575V-S	142	91719	ES54-8-TF	233	91818	YTHDR-48S	97	91925	MMPCP120UG	68
91587	MBC-54-575V-S	142	91720	ES60-8-TF	233	91819	YTHDR-54S	97	91926	MMP-18108	41
91588	MBC-60-575V-S	142	91721	ES66-8-TF	233	91820	YTHDR-60S	97	91927	MMP-18120	41
91589	MBC-72-575V-S	142	91722	ES72-8-TF	233	91821	YTHDR-72S	97	91928	MMP-2442	41
91590	MBC-84-575V-S	142	91723	ES84-8-TF	233	91822	YT-HDR*	98	91929	MMP-2448	41
91591	MBCM-1-S	144	91724	ES96-8-TF	233	91822	YT-HDR	100	91930	MMP-2454	41
91592	MBCM-2-S	144	91725	RS-24	234	91823	YCART-36/900-HDR	98	91931	MMP-2460	41
91593	MBCM-575-1-S	144	91726	RS-30	234	91823	YCART-36/900-HDR	100	91932	MMP-2472	41
91594	MBCM-575-2-S	144	91727	RS-36	234	91824	YCART-42/1050-HDR	98	91933	MMP-2484	41
91653	ES24-4-SN	233	91728	RS-42	234	91824	YCART-42/1050-HDR	100	91934	MMP-2496	41
91654	ES30-4-SN	233	91729	RS-48	234	91825	YCART-48/1200-HDR	98	91935	MMP-24108	41
91655	ES36-4-SN	233	91730	RS-54	234	91825	YCART-48/1200-HDR	100	91936	MMP-24120	41
91656	ES42-4-SN	233	91731	RS-60	234	91826	YCART-54/1350-HDR	98	91943	MMP-648-UG	49
91657	ES48-4-SN	233	91732	RS-66	234	91826	YCART-54/1350-HDR	100	91944	MMP-654-UG	49
91658	ES54-4-SN	233	91733	RS-72	234	91827	YCART-60/1500-HDR	98	91945	MMP-660-UG	49
91659	ES60-4-SN	233	91734	RS-84	234	91827	YCART-60/1500-HDR	100	91946	MMP-672-UG	49
91660	ES66-4-SN	233	91735	RS-96	234	91828	YCART-72/1800-HDR	98	91947	MMP-684-UG	49
91661	ES72-4-SN	233	91736	DC-24	234	91828	YCART-72/1800-HDR	100	91948	MMP-696-UG	49
91662	ES84-4-SN	233	91737	DC-30	234	91829	YSTHDGBK-R	100	91949	MMP-6108-UG	49
91663	ES96-4-SN	233	91738	DC-36	234	91830	YSTHDLBK-R	100	91950	MMP-6120-UG	49
91664	ES24-4-SF	233	91739	DC-42	234	91831	YSTHDBK-BL-R	100	91951	MMP-1248-UG	49
91665	ES30-4-SF	233	91740	DC-48	234	91832	YSTHDBK-GR-R	100	91952	MMP-1254-UG	49
91666	ES36-4-SF	233	91741	DC-54	234	91833	YSTHD-GR-R	100	91953	MMP-1260-UG	49
91667	ES42-4-SF	233	91742	DC-60	234	91834	YSTHD-BL-R	100	91954	MMP-1272-UG	49
91668	ES48-4-SF	233	91743	DC-66	234	91835	LA-54	237	91955	MMP-1284-UG	49

Index *by Item Code*

ITEM CODE	ORDERING NUMBER	PAGE	ITEM CODE	ORDERING NUMBER	PAGE	ITEM CODE	ORDERING NUMBER	PAGE	ITEM CODE	ORDERING NUMBER	PAGE
91956	MMP-1296-UG	49	92036	MMP-18108P-UG	50	92111	MHP-696P-UG	63	92198	FMS-42V-SSTXD	109
91957	MMP-12108-UG	49	92037	MMP-18120P-UG	50	92112	MHP-6108P-UG	63	92199	FMS-48V-SSTXD	109
91958	MMP-12120-UG	49	92038	MMP-2448P-UG	50	92113	MHP-1248P-UG	63	92200	FMS-54V-SSTXD	109
91959	MMP-1848-UG	49	92039	MMP-2454P-UG	50	92114	MHP-1254P-UG	63	92201	FMS-60V-SSTXD	109
91960	MMP-1854-UG	49	92040	MMP-2460P-UG	50	92115	MHP-1260P-UG	63	92202	FMS-72V-SSTXD	109
91961	MMP-1860-UG	49	92041	MMP-2472P-UG	50	92116	MHP-1272P-UG	63	92698	TRB-HT96	45
91962	MMP-1872-UG	49	92042	MMP-2484P-UG	50	92117	MHP-1284P-UG	63	92698	TRB-HT96	52
91963	MMP-1884-UG	49	92043	MMP-2496P-UG	50	92118	MHP-1296P-UG	63	92704	TRB-HT102	45
91964	MMP-1896-UG	49	92044	MMP-24108P-UG	50	92119	MHP-12108P-UG	63	92704	TRB-HT102	52
91965	MMP-18108-UG	49	92045	MMP-24120P-UG	50	92120	MHP-1848P-UG	63	92710	TRB-HT108	45
91966	MMP-18120-UG	49	92046	MMP-3048P-UG	50	92121	MHP-1854P-UG	63	92710	TRB-HT108	52
91967	MMP-2448-UG	49	92047	MMP-3054P-UG	50	92122	MHP-1860P-UG	63	92716	TRB-HT114	45
91968	MMP-2454-UG	49	92048	MMP-3060P-UG	50	92123	MHP-1872P-UG	63	92716	TRB-HT114	52
91969	MMP-2460-UG	49	92049	MMP-3072P-UG	50	92124	MHP-1884P-UG	63	92782	TRB-UHT96	45
91970	MMP-2472-UG	49	92050	MMP-3084P-UG	50	92125	MHP-1896P-UG	63	92782	TRB-UHT96	52
91971	MMP-2484-UG	49	92051	MMP-3096P-UG	50	92126	MHP-18108P-UG	63	92788	TRB-UHT102	45
91972	MMP-2496-UG	49	92052	MMP-30108P-UG	50	92127	MHP-18120P-UG	63	92788	TRB-UHT102	52
91973	MMP-24108-UG	49	92053	MMP-30120P-UG	50	92128	MHP-2448P-UG	63	92794	TRB-UHT108	45
91974	MMP-24120-UG	49	92054	MMP-3654P-UG	50	92129	MHP-2454P-UG	63	92794	TRB-UHT108	52
91975	MMP-3048-UG	49	92055	MMP-3660P-UG	50	92130	MHP-2460P-UG	63	92800	TRB-UHT114	45
91976	MMP-3054-UG	49	92056	MMP-3672P-UG	50	92131	MHP-2472P-UG	63	92800	TRB-UHT114	52
91977	MMP-3060-UG	49	92057	MMP-3684P-UG	50	92132	MHP-2484P-UG	63	93089	PTS-ASR	225
91978	MMP-3072-UG	49	92058	MMP-3696P-UG	50	92133	MHP-2496P-UG	63	93090	PTS-AHDSR	225
91979	MMP-3084-UG	49	92059	MMP-36108P-UG	50	92134	MHP-24108P-UG	63	93113	SLU-48	243
91980	MMP-3096-UG	49	92060	MMP-36120P-UG	50	92135	MHP-24120P-UG	63	93114	TLU-48	243
91981	MMP-30108-UG	49	92061	MHP-648-UG	62	92136	MHP-3048P-UG	63	93115	SLAWK-48	242
91982	MMP-30120-UG	49	92062	MHP-654-UG	62	92137	MHP-3054P-UG	63	93116	SLUWK-48	242
91983	MMP-3654-UG	49	92063	MHP-660-UG	62	92138	MHP-3060P-UG	63	93117	TLAWK-48	242
91984	MMP-3660-UG	49	92064	MHP-672-UG	62	92139	MHP-3072P-UG	63	93118	TLUWK-48	242
91985	MMP-3672-UG	49	92065	MHP-684-UG	62	92140	MHP-3084P-UG	63	93119	BDBC-24	145
91986	MMP-3684-UG	49	92066	MHP-696-UG	62	92141	MHP-3096P-UG	63	93120	BDBC-30	145
91987	MMP-3696-UG	49	92067	MHP-6108-UG	62	92142	MHP-30108P-UG	63	93121	BDBC-36	145
91988	MMP-36108-UG	49	92068	MHP-1248-UG	62	92143	MHP-30120P-UG	63	93122	BDBC-42	145
91989	MMP-36120-UG	49	92069	MHP-1254-UG	62	92144	MHP-3654P-UG	63	93123	BDBC-48	145
91995	MMP-1836P	43	92070	MHP-1260-UG	62	92145	MHP-3660P-UG	63	93124	BDBC-54	145
91996	MMP-1842P	43	92071	MHP-1272-UG	62	92146	MHP-3672P-UG	63	93125	BDBC-60	145
91997	MMP-1848P	43	92072	MHP-1284-UG	62	92147	MHP-3684P-UG	63	93126	BDBC-72	145
91998	MMP-1854P	43	92073	MHP-1296-UG	62	92148	MHP-3696P-UG	63	93127	BDBCR-HDR-24	147
91999	MMP-1860P	43	92074	MHP-12108-UG	62	92149	MHP-36108P-UG	63	93128	BDBCR-HDR-30	147
92000	MMP-1872P	43	92075	MHP-1848-UG	62	92150	MHP-36120P-UG	63	93129	BDBCR-HDR-36	147
92001	MMP-1884P	43	92076	MHP-1854-UG	62	92159	DCRR-24	237	93130	BDBCR-HDR-42	147
92002	MMP-1896P	43	92077	MHP-1860-UG	62	92160	DCRR-30	237	93131	BDBCR-HDR-48	147
92003	MMP-18108P	43	92078	MHP-1872-UG	62	92161	DCRR-36	237	93132	BDBCR-HDR-54	147
92004	MMP-18120P	43	92079	MHP-1884-UG	62	92162	DCRR-42	237	93133	BDBCR-HDR-60	147
92005	MMP-2442P	43	92080	MHP-1896-UG	62	92163	DCRR-48	237	93134	BDBCR-HDR-72	147
92006	MMP-2448P	43	92081	MHP-18108-UG	62	92164	DCRR-54	237	93135	BDBCR-BS-24	147
92007	MMP-2454P	43	92082	MHP-18120-UG	62	92165	DCRR-60	237	93136	BDBCR-BS-30	147
92008	MMP-2460P	43	92083	MHP-2448-UG	62	92166	DCRR-66	237	93137	BDBCR-BS-36	147
92009	MMP-2472P	43	92084	MHP-2454-UG	62	92167	DCRR-72	237	93138	BDBCR-BS-42	147
92010	MMP-2484P	43	92085	MHP-2460-UG	62	92168	DCRR-84	237	93139	BDBCR-BS-48	147
92011	MMP-2496P	43	92086	MHP-2472-UG	62	92169	DCRR-96	237	93140	BDBCR-BS-54	147
92012	MMP-24108P	43	92087	MHP-2484-UG	62	92170	RSRR-24	237	93141	BDBCR-BS-60	147
92013	MMP-24120P	43	92088	MHP-2496-UG	62	92171	RSRR-30	237	93142	BDBCR-BS-72	147
92014	MMP-648P-UG	50	92089	MHP-24108-UG	62	92172	RSRR-36	237	93370	BDBDR-SPACER	147
92015	MMP-654P-UG	50	92090	MHP-24120-UG	62	92173	RSRR-42	237	93371	BDBDR-GUARD	147
92016	MMP-660P-UG	50	92091	MHP-3048-UG	62	92174	RSRR-48	237	93372	BDBCR-B-HW	147
92017	MMP-672P-UG	50	92092	MHP-3054-UG	62	92175	RSRR-54	237	93373	BDBCR-R-HW	147
92018	MMP-684P-UG	50	92093	MHP-3060-UG	62	92176	RSRR-60	237	93374	BDBCR-ADJARM	147
92019	MMP-696P-UG	50	92094	MHP-3072-UG	62	92177	RSRR-66	237	93375	BDBCR-BL	147
92020	MMP-6108P-UG	50	92095	MHP-3084-UG	62	92178	RSRR-72	237	93376	BDBCR-VBELT	147
92021	MMP-6120P-UG	50	92096	MHP-3096-UG	62	92179	RSRR-84	237	93440	MHP-6120-UG	62
92022	MMP-1248P-UG	50	92097	MHP-30108-UG	62	92180	RSRR-96	237	93441	MHP-12120-UG	62
92023	MMP-1254P-UG	50	92098	MHP-30120-UG	62	92185	FMS-18-SSTXD	109	93442	MHP-6120P-UG	63
92024	MMP-1260P-UG	50	92099	MHP-3654-UG	62	92186	FMS-24-SSTXD	109	93443	MHP-12120P-UG	63
92025	MMP-1272P-UG	50	92100	MHP-3660-UG	62	92187	FMS-30-SSTXD	109	A1636	CLFR1360/54.4-12	249
92026	MMP-1284P-UG	50	92101	MHP-3672-UG	62	92188	FMS-36-SSTXD	109	K2546	WB24-2-S/S	160
92027	MMP-1296P-UG	50	92102	MHP-3684-UG	62	92189	FMS-42-SSTXD	109	K2547	WB30-2-S/S	160
92028	MMP-12108P-UG	50	92103	MHP-3696-UG	62	92190	FMS-48-SSTXD	109	K2548	WB36-2-S/S	160
92029	MMP-12120P-UG	50	92104	MHP-36108-UG	62	92191	FMS-54-SSTXD	109	K2549	WB42-2-S/S	160
92030	MMP-1848P-UG	50	92105	MHP-36120-UG	62	92192	FMS-60-SSTXD	109	K2550	WB48-2-S/S	160
92031	MMP-1854P-UG	50	92106	MHP-648P-UG	63	92193	FMS-72-SSTXD	109	K2551	WB54-2-S/S	160
92032	MMP-1860P-UG	50	92107	MHP-654P-UG	63	92194	FMS-18V-SSTXD	109	K2552	WB60-2-S/S	160
92033	MMP-1872P-UG	50	92108	MHP-660P-UG	63	92195	FMS-24V-SSTXD	109	K2553	WB72-2-S/S	160
92034	MMP-1884P-UG	50	92109	MHP-672P-UG	63	92196	FMS-30V-SSTXD	109	K2554	WB84-2-S/S	160
92035	MMP-1896P-UG	50	92110	MHP-684P-UG	63	92197	FMS-36V-SSTXD	109	K2555	WB96-2-S/S	160

ITEM CODE	ORDERING NUMBER	PAGE	ITEM CODE	ORDERING NUMBER	PAGE	ITEM CODE	ORDERING NUMBER	PAGE	ITEM CODE	ORDERING NUMBER	PAGE
K2686	WB24C-2-S/S	160									
K2687	WB30C-2-S/S	160									
K2688	WB36C-2-S/S	160									
K2689	WB42C-2-S/S	160									
K2690	WB48C-2-S/S	160									
K2691	WB54C-2-S/S	160									
K2692	WB60C-2-S/S	160									
K2693	WB72C-2-S/S	160									
K2694	WB84C-2-S/S	160									
K2695	WB96C-2-S/S	160									

Index *by Ordering Number*

ORDERING NUMBER	ITEM CODE	PAGE	ORDERING NUMBER	ITEM CODE	PAGE	ORDERING NUMBER	ITEM CODE	PAGE	ORDERING NUMBER	ITEM CODE	PAGE
900924	04200	246	BDBCR-BS-42	93138	147	CBCS72	90554	148	CBSP60	91439	151
900936	04143	246	BDBCR-BS-48	93139	147	CBCS84	90555	148	CBSP72	91440	151
900948	04144	246	BDBCR-BS-54	93140	147	CBS18PF	79958	149	CBSP84	91441	151
900960	04145	246	BDBCR-BS-60	93141	147	CBS18SF	79936	149	CBSP96	91442	151
900972	04146	246	BDBCR-BS-72	93142	147	CBS24PF	79959	149	CBV-72	74389	182
900984	04147	246	BDBCR-HDR-24	93127	147	CBS24SF	79937	149	CBV-84	74390	182
10FRD6.5/21	71014	247	BDBCR-HDR-30	93128	147	CBS30PF	79960	149	CBV-96	74391	182
10FRP6.5/21	71020	247	BDBCR-HDR-36	93129	147	CBS30SF	79938	149	CBV-L	73134	182
10ND6.5/21	71002	247	BDBCR-HDR-42	93130	147	CBS36PF	79961	149	CBV-M	73133	182
10NP6.5/21	71010	247	BDBCR-HDR-48	93131	147	CBS36SF	79939	149	CBV-S	73132	182
12FRD6.5/21	71016	247	BDBCR-HDR-54	93132	147	CBS42PF	79962	149	CBV-XS	73131	182
12FRDC6.5/21	71159	247	BDBCR-HDR-60	93133	147	CBS42SF	79940	149	CCKHDL	79225	92
12FRP6.5/21	71022	247	BDBCR-HDR-72	93134	147	CBS48PF	79963	149	CCKHDL	79225	126
12ND6.5/21	71004	247	BDBCR-R-HW	93373	147	CBS48SF	79941	149	CCKHDL	79225	130
12NDC6.5/21	71155	247	BDBCR-VBELT	93376	147	CBS54PF	79964	149	CCKHDL	79225	166
12NP6.5/21	71012	247	BDBDR-GUARD	93371	147	CBS54SF	79942	149	CCKHDR	79229	92
15FRD6.5/21	71018	247	BDBDR-SPACER	93370	147	CBS60PF	79965	149	CCKHDR	79229	126
15FRP6.5/21	71015	247	CART-24/600	77900	126	CBS60SF	79943	149	CCKHDR	79229	130
15ND6.5/21	71006	247	CART-24/600	77900	130	CBS72PF	79966	149	CCKHDR	79229	166
15NP6.5/21	71017	247	CART-24/600	77900	134	CBS72SF	79944	149	CCKHDTS	79233	92
20FRD6.5/21	71019	247	CART-30/750	77901	126	CBS84PF	79967	149	CCKHDTS	79233	126
20FRP6.5/21	72129	247	CART-30/750	77901	130	CBS84SF	79945	149	CCKHDTS	79233	130
20ND6.5/21	71008	247	CART-30/750	77901	134	CBS96PF	79968	149	CCKHDTS	79233	166
20NP6.5/21	71021	247	CART-36/900	77902	126	CBS96SF	79946	149	CCKL	79224	92
25ND6.5/21	71152	247	CART-36/900	77902	130	CBSBLD18F	79947	149	CCKL	79224	104
25NP6.5/21	71163	247	CART-36/900	77902	134	CBSBLD18F	79947	151	CCKL	79224	107
7.5NLD3.3/11	71077	247	CART-42/1050	77903	126	CBSBLD18F	79947	154	CCKL	79224	166
7.5WLD3.3/11	71076	247	CART-42/1050	77903	130	CBSBLD24F	79948	149	CCKR	79228	92
900CBK	04149	246	CART-42/1050	77903	134	CBSBLD24F	79948	151	CCKR	79228	104
ABU	76788	137	CART-48/1200	77904	126	CBSBLD24F	79948	154	CCKR	79228	107
ABU	76788	137	CART-48/1200	77904	130	CBSBLD30F	79949	149	CCKR	79228	166
AWTA	75907	47	CART-48/1200	77904	134	CBSBLD30F	79949	151	CCKTS	79232	92
AWTA	75907	54	CART-54/1350	77905	126	CBSBLD30F	79949	154	CCKTS	79232	104
AWTA	75907	61	CART-54/1350	77905	130	CBSBLD36F	79950	149	CCKTS	79232	107
AWTA	75907	68	CART-54/1350	77905	134	CBSBLD36F	79950	151	CCKTS	79232	166
AWTA	75907	73	CART-60/1500	77906	126	CBSBLD36F	79950	154	CCMK	78919	92
AWTB	75905	47	CART-60/1500	77906	130	CBSBLD42F	79951	149	CCMK	78919	104
AWTB	75905	54	CART-60/1500	77906	134	CBSBLD42F	79951	151	CCMK	78919	107
AWTB	75905	61	CART-72/1800	77907	126	CBSBLD42F	79951	154	CCMK	78919	166
AWTB	75905	68	CART-72/1800	77907	130	CBSBLD48F	79952	149	CCMKHD	78920	92
AWTB	75905	73	CART-72/1800	77907	134	CBSBLD48F	79952	151	CCMKHD	78920	126
AWTHK	75909	47	CART2-120/3000	77912	126	CBSBLD48F	79952	154	CCMKHD	78920	130
AWTHK	75909	54	CART2-120/3000	77912	130	CBSBLD54F	79953	149	CCMKHD	78920	166
AWTHK	75909	61	CART2-120/3000	77912	134	CBSBLD54F	79953	151	CDWB24	75884	138
AWTHK	75909	68	CART2-60/1500	77908	126	CBSBLD54F	79953	154	CDWB30	75885	138
AWTHK	75909	73	CART2-60/1500	77908	130	CBSBLD60F	79954	149	CDWB36	75886	138
AWTMB	75906	47	CART2-60/1500	77908	134	CBSBLD60F	79954	151	CDWB42	75887	138
AWTMB	75906	54	CART2-72/1800	77909	126	CBSBLD60F	79954	154	CDWB48	75888	138
AWTMB	75906	61	CART2-72/1800	77909	130	CBSBLD72F	79955	149	CDWB54	75889	138
AWTMB	75906	68	CART2-72/1800	77909	134	CBSBLD72F	79955	151	CDWB60	75890	138
AWTMB	75906	73	CART2-84/2100	77910	126	CBSBLD72F	79955	154	CDWB72	75891	138
AWTNCB	76069	47	CART2-84/2100	77910	130	CBSBLD84F	79956	149	CDWB84	76942	138
AWTNCB	76069	54	CART2-84/2100	77910	134	CBSBLD84F	79956	151	CDWB96	79062	138
AWTNCB	76069	61	CART2-96/2400	77911	126	CBSBLD84F	79956	154	CEBC1	30018	246
AWTNCB	76069	68	CART2-96/2400	77911	130	CBSBLD96F	79957	149	CEBC1-220	30021	246
AWTNCB	76069	73	CART2-96/2400	77911	134	CBSBLD96F	79957	151	CEBC1-DRNS4A	37043	246
AWTPBA	90000	47	CBC18	76668	148	CBSBLD96F	79957	154	CEBC1/CEBC2-BAT4A	37076	246
AWTPBA	90000	54	CBC24	76669	148	CBSBP18F	90101	151	CEBC1/CEBC2-BAT5A	37447	246
AWTPBA	90000	61	CBC30	76670	148	CBSBP24F	90102	151	CEBC1CPLG	30031	246
AWTPBA	90000	68	CBC36	76671	148	CBSBP30F	90103	151	CEBC2	30019	246
AWTPBA	90000	73	CBC3R	90641	148	CBSBP36F	90104	151	CEBC2-220	30022	246
BDBC-24	93119	145	CBC42	76672	148	CBSBP42F	90105	151	CEBC2-DR18V	30040	246
BDBC-30	93120	145	CBC48	76673	148	CBSBP48F	90106	151	CEBC2CLPG	30032	246
BDBC-36	93121	145	CBC54	76674	148	CBSBP54F	90107	151	CFG-212	78838	21
BDBC-42	93122	145	CBC60	76675	148	CBSBP60F	90108	151	CFG-218	78839	21
BDBC-48	93123	145	CBC72	90762	148	CBSBP72F	90109	151	CFG-224	78840	21
BDBC-54	93124	145	CBC84	90763	148	CBSBP84F	90110	151	CFG-230	78841	21
BDBC-60	93125	145	CBCS18	90537	148	CBSBP96F	90111	151	CFG-236	78842	21
BDBC-72	93126	145	CBCS24	90538	148	CBSP18	91432	151	CFG-242	78843	21
BDBCR-ADJARM	93374	147	CBCS30	90539	148	CBSP24	91433	151	CFG-248	78844	21
BDBCR-B-HW	93372	147	CBCS36	90540	148	CBSP30	91434	151	CFG-254	78845	21
BDBCR-BL	93375	147	CBCS42	90541	148	CBSP36	91435	151	CFG-260	78846	21
BDBCR-BS-24	93135	147	CBCS48	90542	148	CBSP42	91436	151	CFG-818	78924	21
BDBCR-BS-30	93136	147	CBCS54	90543	148	CBSP48	91437	151	CFG-824	78925	21
BDBCR-BS-36	93137	147	CBCS60	90544	148	CBSP54	91438	151	CFG-830	78926	21

Index *by Ordering Number*

ORDERING NUMBER	ITEM CODE	PAGE	ORDERING NUMBER	ITEM CODE	PAGE	ORDERING NUMBER	ITEM CODE	PAGE	ORDERING NUMBER	ITEM CODE	PAGE
CFG-836	78927	21	CLN1800/72-12	71042	249	CRB-LS22	77090	27	CRB-W28	78474	37
CFG-842	78928	21	CLN1800/72-12S	79395	249	CRB-LS22	77090	31	CRB-W34	78475	16
CFG-848	78929	21	CLN2100/84-12	71044	249	CRB-LS22HT	77553	27	CRB-W34	78475	22
CFG-854	78930	21	CLN2100/84-12S	79398	249	CRB-LS22HT	77553	31	CRB-W34	78475	37
CFG-860	78931	21	CLN460/18.4-12	71111	249	CRB-LS22W	77099	27	CRB-W40	78476	16
CLFR1060/42.4-12	71123	249	CLN460/18.4-12S	79383	249	CRB-LS22W	77099	31	CRB-W40	78476	22
CLFR1060/42.4-12S	79411	249	CLN600/24-12	71112	249	CRB-LS28	77091	27	CRB-W40	78476	37
CLFR1200/48-12	71005	249	CLN600/24-12S	79384	249	CRB-LS28	77091	31	CRB-W46	78477	16
CLFR1200/48-12S	79412	249	CLN760/30.4-12	71113	249	CRB-LS28HT	77554	27	CRB-W46	78477	22
CLFR1360/54.4-12	A1636	249	CLN760/30.4-12S	79385	249	CRB-LS28HT	77554	31	CRB-W46	78477	37
CLFR1360/54.4-12S	79413	249	CLN900/36-12	71115	249	CRB-LS28W	77100	27	CRB-W52	78478	16
CLFR1520/60.8-12	71009	249	CLN900/36-12S	79387	249	CRB-LS28W	77100	31	CRB-W52	78478	22
CLFR1520/60.8-12S	79415	249	CLSFG-212	77144	30	CRB-LS34	77092	27	CRB-W52	78478	37
CLFR1800/72-12	71079	249	CLSFG-218	77145	30	CRB-LS34	77092	31	CRB-W58	78479	16
CLFR1800/72-12S	79418	249	CLSFG-224	77146	30	CRB-LS34HT	77555	27	CRB-W58	78479	22
CLFR2100/84-12	71082	249	CLSFG-230	77147	30	CRB-LS34HT	77555	31	CRB-W58	78479	37
CLFR2100/84-12S	79421	249	CLSFG-236	77148	30	CRB-LS34W	77101	27	CRB10	75628	16
CLFR460/18.4-12	71118	249	CLSFG-242	77149	30	CRB-LS34W	77101	31	CRB10	75628	22
CLFR460/18.4-12S	79406	249	CLSFG-248	77150	30	CRB-LS40	77093	27	CRB10	75628	37
CLFR600/24-12	71119	249	CLSFG-254	77151	30	CRB-LS40	77093	31	CRB10	75628	169
CLFR600/24-12S	79407	249	CLSFG-260	77152	30	CRB-LS40HT	77556	27	CRB16	75629	16
CLFR760/30.4-12	71120	249	CLSFG-818	77153	30	CRB-LS40HT	77556	31	CRB16	75629	22
CLFR760/30.4-12S	79408	249	CLSFG-824	77154	30	CRB-LS40W	77102	27	CRB16	75629	37
CLFR900/36-12	71122	249	CLSFG-830	77155	30	CRB-LS40W	77102	31	CRB16	75629	169
CLFR900/36-12S	79410	249	CLSFG-836	77156	30	CRB-LS46	77094	27	CRB22	75630	16
CLMFR1050/42-15	61312	248	CLSFG-842	77157	30	CRB-LS46	77094	31	CRB22	75630	22
CLMFR1050/42-15S	62067	248	CLSFG-848	77158	30	CRB-LS46HT	77557	27	CRB22	75630	37
CLMFR1200/48-15	61313	248	CLSFG-854	77159	30	CRB-LS46HT	77557	31	CRB22	75630	169
CLMFR1200/48-15S	62068	248	CLSFG-860	77160	30	CRB-LS46W	77103	27	CRB28	75631	16
CLMFR1350/54-15	61314	248	CPB	76692	148	CRB-LS46W	77103	31	CRB28	75631	22
CLMFR1350/54-15S	62069	248	CRB-HT10	76593	16	CRB-LS52	77095	27	CRB28	75631	37
CLMFR1500/60-15	61315	248	CRB-HT10	76593	22	CRB-LS52	77095	31	CRB28	75631	169
CLMFR1500/60-15S	62070	248	CRB-HT10	76593	37	CRB-LS52HT	77558	27	CRB34	75632	16
CLMFR1800/72-15	61316	248	CRB-HT16	76594	16	CRB-LS52HT	77558	31	CRB34	75632	22
CLMFR1800/72-15S	62071	248	CRB-HT16	76594	22	CRB-LS52W	77104	27	CRB34	75632	37
CLMFR2100/84-15	61317	248	CRB-HT16	76594	37	CRB-LS52W	77104	31	CRB34	75632	169
CLMFR2100/84-15S	62072	248	CRB-HT22	76595	16	CRB-LS58	77096	27	CRB40	75633	16
CLMFR450/18-15	61308	248	CRB-HT22	76595	22	CRB-LS58	77096	31	CRB40	75633	22
CLMFR450/18-15S	62063	248	CRB-HT22	76595	37	CRB-LS58HT	77559	27	CRB40	75633	37
CLMFR6.5/21-15	61319	247	CRB-HT28	76596	16	CRB-LS58HT	77559	31	CRB40	75633	169
CLMFR600/24-15	61309	248	CRB-HT28	76596	22	CRB-LS58W	77105	27	CRB46	75634	16
CLMFR600/24-15S	62064	248	CRB-HT28	76596	37	CRB-LS58W	77105	31	CRB46	75634	22
CLMFR750/30-15	61310	248	CRB-HT34	76597	16	CRB-UHT10	91253	16	CRB46	75634	37
CLMFR750/30-15S	62065	248	CRB-HT34	76597	22	CRB-UHT10	91253	37	CRB46	75634	169
CLMFR900/36-15	61311	248	CRB-HT34	76597	37	CRB-UHT16	91254	16	CRB52	75635	16
CLMFR900/36-15S	62066	248	CRB-HT40	76598	16	CRB-UHT16	91254	37	CRB52	75635	22
CLMN1050/42-15	61298	248	CRB-HT40	76598	22	CRB-UHT22	91255	16	CRB52	75635	37
CLMN1050/42-15S	62056	248	CRB-HT40	76598	37	CRB-UHT22	91255	37	CRB52	75635	169
CLMN1200/48-15	61299	248	CRB-HT46	76599	16	CRB-UHT28	91256	16	CRB58	75636	16
CLMN1200/48-15S	62057	248	CRB-HT46	76599	22	CRB-UHT28	91256	37	CRB58	75636	22
CLMN1350/54-15	61300	248	CRB-HT46	76599	37	CRB-UHT34	91257	16	CRB58	75636	37
CLMN1350/54-15S	62058	248	CRB-HT52	76600	16	CRB-UHT34	91257	37	CRB58	75636	169
CLMN1500/60-15	61301	248	CRB-HT52	76600	22	CRB-UHT40	91258	16	CRB64	75775	16
CLMN1500/60-15S	62059	248	CRB-HT52	76600	37	CRB-UHT40	91258	37	CRB64	75775	22
CLMN1800/72-15	61302	248	CRB-HT58	76601	16	CRB-UHT46	91259	16	CRB64	75775	37
CLMN1800/72-15S	62060	248	CRB-HT58	76601	22	CRB-UHT46	91259	37	CRB70	75773	16
CLMN2100/84-15	61303	248	CRB-HT58	76601	37	CRB-UHT52	91260	16	CRB70	75773	22
CLMN2100/84-15S	62061	248	CRB-HT64	76602	16	CRB-UHT52	91260	37	CRB70	75773	37
CLMN450/18-15	61294	248	CRB-HT64	76602	22	CRB-UHT58	91261	16	CRB70	75773	169
CLMN450/18-15S	62052	248	CRB-HT64	76602	37	CRB-UHT58	91261	37	CRB76	76940	16
CLMN6.5/21-15	62216	247	CRB-HT70	76603	16	CRB-UHT64	91262	16	CRB76	76940	22
CLMN600/24-15	61295	248	CRB-HT70	76603	22	CRB-UHT64	91262	37	CRB76	76940	37
CLMN600/24-15S	62053	248	CRB-HT70	76603	37	CRB-UHT70	91263	16	CRB82	76941	16
CLMN750/30-15	61296	248	CRB-LS10	77088	27	CRB-UHT70	91263	37	CRB82	76941	22
CLMN750/30-15S	62054	248	CRB-LS10	77088	31	CRB-W10	78471	16	CRB82	76941	37
CLMN900/36-15	61297	248	CRB-LS10HT	77551	27	CRB-W10	78471	22	CRDF18	90631	148
CLMN900/36-15S	62055	248	CRB-LS10HT	77551	31	CRB-W10	78471	37	CRDF24	90632	148
CLN1060/42.4-12	71116	249	CRB-LS10W	77097	27	CRB-W16	78472	16	CRDF30	90633	148
CLN1060/42.4-12S	79388	249	CRB-LS10W	77097	31	CRB-W16	78472	22	CRDF36	90634	148
CLN1200/48-12	71039	249	CRB-LS16	77089	27	CRB-W16	78472	37	CRDF42	90635	148
CLN1200/48-12S	79389	249	CRB-LS16	77089	31	CRB-W22	78473	16	CRDF48	90636	148
CLN1360/54.4-12	71126	249	CRB-LS16HT	77552	27	CRB-W22	78473	22	CRDF54	90637	148
CLN1360/54.4-12S	79390	249	CRB-LS16HT	77552	31	CRB-W22	78473	37	CRDF60	90638	148
CLN1520/60.8-12	71127	249	CRB-LS16W	77098	27	CRB-W28	78474	16	CRDF72	90639	148
CLN1520/60.8-12S	79392	249	CRB-LS16W	77098	31	CRB-W28	78474	22	CRDF84	90640	148

Index *by Ordering Number*

ORDERING NUMBER	ITEM CODE	PAGE
CST1HD-B	77874	134
CST1HD-G	77875	134
CST1HD-S	77873	134
CST1HD-W	77872	134
CSTBK	77037	134
CSTHDMK	77871	134
CSTHDPM	77869	134
CTS-B	77744	134
CTS-B-S/S	78387	33
CTS-G	77745	134
CTS-S	77743	96
CTS-S	77743	134
CTS-W	77742	134
DC-24	91736	234
DC-30	91737	234
DC-36	91738	234
DC-42	91739	234
DC-48	91740	234
DC-54	91741	234
DC-60	91742	234
DC-66	91743	234
DC-72	91744	234
DC-84	91745	234
DC-96	91746	234
DCRR-24	92159	237
DCRR-30	92160	237
DCRR-36	92161	237
DCRR-42	92162	237
DCRR-48	92163	237
DCRR-54	92164	237
DCRR-60	92165	237
DCRR-66	92166	237
DCRR-72	92167	237
DCRR-84	92168	237
DCRR-96	92169	237
DRIVE HANDLE 900	4140	246
DRXD-42-520	76912	212
DRXD-42-535	76919	212
DRXD-48-520	76913	212
DRXD-48-535	76920	212
DRXD-54-520	76914	212
DRXD-54-535	76921	212
DRXD-60-520	76915	212
DRXD-60-535	76922	212
DRXD-72-520	76916	212
DRXD-72-535	76923	212
DRXD-84-520	76917	212
DRXD-84-535	76924	212
DRXD-96-520	76918	212
DRXD-96-535	76925	212
DRXH-24-420	76880	210
DRXH-24-435	76896	210
DRXH-24-520	76888	210
DRXH-24-535	76904	210
DRXH-30-420	76881	210
DRXH-30-435	76897	210
DRXH-30-520	76889	210
DRXH-30-535	76905	210
DRXH-36-420	76882	210
DRXH-36-435	76898	210
DRXH-36-520	76890	210
DRXH-36-535	76906	210
DRXH-42-420	76883	210
DRXH-42-435	76899	210
DRXH-42-520	76891	210
DRXH-42-535	76907	210
DRXH-48-420	76884	210
DRXH-48-435	76900	210
DRXH-48-520	76892	210
DRXH-48-535	76908	210
DRXH-54-420	76885	210
DRXH-54-435	76901	210
DRXH-54-520	76893	210
DRXH-54-535	76909	210
DRXH-60-420	76886	210
DRXH-60-435	76902	210
DRXH-60-520	76894	210
DRXH-60-535	76910	210
DRXH-72-420	76887	210
DRXH-72-435	76903	210
DRXH-72-520	76895	210
DRXH-72-535	76911	210
DRXL-24-420	76816	206
DRXL-24-435	76832	206
DRXL-24-520	76824	206
DRXL-24-535	76840	206
DRXL-30-420	76817	206
DRXL-30-435	76833	206
DRXL-30-520	76825	206
DRXL-30-535	76841	206
DRXL-36-420	76818	206
DRXL-36-435	76834	206
DRXL-36-520	76826	206
DRXL-36-535	76842	206
DRXL-42-420	76819	206
DRXL-42-435	76835	206
DRXL-42-520	76827	206
DRXL-42-535	76843	206
DRXL-48-420	76820	206
DRXL-48-435	76836	206
DRXL-48-520	76828	206
DRXL-48-535	76844	206
DRXL-54-420	76821	206
DRXL-54-435	76837	206
DRXL-54-520	76829	206
DRXL-54-535	76845	206
DRXL-60-420	76822	206
DRXL-60-435	76838	206
DRXL-60-520	76830	206
DRXL-60-535	76846	206
DRXL-72-420	76823	206
DRXL-72-435	76839	206
DRXL-72-520	76831	206
DRXL-72-535	76847	206
DRXM-24-420	76848	208
DRXM-24-435	76864	208
DRXM-24-520	76856	208
DRXM-24-535	76872	208
DRXM-30-420	76849	208
DRXM-30-435	76865	208
DRXM-30-520	76857	208
DRXM-30-535	76873	208
DRXM-36-420	76850	208
DRXM-36-435	76866	208
DRXM-36-520	76858	208
DRXM-36-535	76874	208
DRXM-42-420	76851	208
DRXM-42-435	76867	208
DRXM-42-520	76859	208
DRXM-42-535	76875	208
DRXM-48-420	76852	208
DRXM-48-435	76868	208
DRXM-48-520	76860	208
DRXM-48-535	76876	208
DRXM-54-420	76853	208
DRXM-54-435	76869	208
DRXM-54-520	76861	208
DRXM-54-535	76877	208
DRXM-60-420	76854	208
DRXM-60-435	76870	208
DRXM-60-520	76862	208
DRXM-60-535	76878	208
DRXM-72-420	76855	208
DRXM-72-435	76871	208
DRXM-72-520	76863	208
DRXM-72-535	76879	208
DWP-72	75883	141
DWP-84	76815	141
DWP-96	79060	141
EBC-EB	30007	246
EBC-H	30008	246
EBC/CEBC-BK	30024	246
EBC1	30001	246
EBC1-220	30011	246
EBC1-220-DR	30013	246
EBC1-B	30003	246
EBC1-DR	30005	246
EBC1-RK	30033	246
EBC1CLPG	30016	246
EBC2	30002	246
EBC2-220	30012	246
EBC2-220-DR	30014	246
EBC2-B	30004	246
EBC2-DR	30006	246
EBC2-RK	30034	246
EBC2CLPG	30017	246
ELT	74774	164
ES24-4-SF	91664	233
ES24-4-SN	91653	233
ES24-8-SF	91700	233
ES24-8-SN	91689	233
ES30-4-SF	91665	233
ES30-4-SN	91654	233
ES30-8-SF	91701	233
ES30-8-SN	91690	233
ES36-4-SF	91666	233
ES36-4-SN	91655	233
ES36-8-SF	91702	233
ES36-8-SN	91691	233
ES42-4-SF	91667	233
ES42-4-SN	91656	233
ES42-8-SF	91703	233
ES42-8-SN	91692	233
ES48-4-SF	91668	233
ES48-4-SN	91657	233
ES48-4-TF	91682	233
ES48-4-TN	91675	233
ES48-8-SF	91704	233
ES48-8-SN	91693	233
ES48-8-TF	91718	233
ES48-8-TN	91711	233
ES54-4-SF	91669	233
ES54-4-SN	91658	233
ES54-4-TF	91683	233
ES54-4-TN	91676	233
ES54-8-SF	91705	233
ES54-8-SN	91694	233
ES54-8-TF	91719	233
ES54-8-TN	91712	233
ES60-4-SF	91670	233
ES60-4-SN	91659	233
ES60-4-TF	91684	233
ES60-4-TN	91677	233
ES60-8-SF	91706	233
ES60-8-SN	91695	233
ES60-8-TF	91720	233
ES60-8-TN	91713	233
ES66-4-SF	91671	233
ES66-4-SN	91660	233
ES66-4-TF	91685	233
ES66-4-TN	91678	233
ES66-8-SF	91707	233
ES66-8-SN	91696	233
ES66-8-TF	91721	233
ES66-8-TN	91714	233
ES72-4-SF	91672	233
ES72-4-SN	91661	233
ES72-4-TF	91686	233
ES72-4-TN	91679	233
ES72-8-SF	91708	233
ES72-8-SN	91697	233
ES72-8-TF	91722	233
ES72-8-TN	91715	233
ES84-4-SF	91673	233
ES84-4-SN	91662	233
ES84-4-TF	91687	233
ES84-4-TN	91680	233
ES84-8-SF	91709	233
ES84-8-SN	91698	233
ES84-8-TF	91723	233
ES84-8-TN	91716	233
ES96-4-SF	91674	233
ES96-4-SN	91663	233
ES96-4-TF	91688	233
ES96-4-TN	91681	233
ES96-8-SF	91710	233
ES96-8-SN	91699	233
ES96-8-TF	91724	233
ES96-8-TN	91717	233
ESBK-ATEX	90264	19
ESBK-B	76411	19
ESBK-PS	76410	19
ESBK-PS	76410	137
ESPBK	76408	19
ESPRK	76409	19
ESPRK	76409	137
ESPSBK	76407	19
ESS-B	76413	19
ESS-S	76412	19
ESS-S	76412	137
EST-A-B	90816	19
EST-A-P	90814	19
EST-A-S	90815	19
EST-B	76405	19
EST-G-S/S	78810	24
EST-P	76403	19
EST-P-S/S	78808	24
EST-S	76404	19
EST-W-S/S	78809	24
ESTAK-EST	76406	19
ESTAK-EST	76406	137
ESTAK-EST-S/S	78849	24
EZAI-24	79000	187
EZAI-24I	79091	190
EZAI-24I	79091	199
EZAI-24I	79091	202
EZAI-30	79001	187
EZAI-30I	79092	190
EZAI-30I	79092	199
EZAI-30I	79092	202
EZAI-36	79002	187
EZAI-36I	79093	190
EZAI-36I	79093	199
EZAI-36I	79093	202
EZAI-42	79003	187
EZAI-42I	79094	190
EZAI-42I	79094	199
EZAI-42I	79094	202
EZAI-48	79004	187
EZAI-48I	79095	190
EZAI-48I	79095	199
EZAI-48I	79095	202
EZAI-54	79005	187
EZAI-54I	79096	190
EZAI-54I	79096	199
EZAI-54I	79096	202
EZAI-60	79006	187
EZAI-60I	79097	190
EZAI-60I	79097	199
EZAI-60I	79097	202
EZAI-72	79007	187
EZAI-72I	79098	190
EZAI-72I	79098	199
EZAI-72I	79098	202
EZBMK-24	78944	195
EZBMK-24	78944	198
EZBMK-30	78945	195
EZBMK-30	78945	198
EZBMK-36	78946	195
EZBMK-36	78946	198

Index *by Ordering Number*

ORDERING NUMBER	ITEM CODE	PAGE	ORDERING NUMBER	ITEM CODE	PAGE	ORDERING NUMBER	ITEM CODE	PAGE	ORDERING NUMBER	ITEM CODE	PAGE
EZBMK-42	78947	195	EZIB60-5L	78901	193	EZP1-UHT242	91231	14	EZP1T-872	78506	12
EZBMK-42	78947	198	EZIB60-5M	78917	196	EZP1-UHT248	91232	14	EZPTBT	77384	20
EZBMK-48	78948	195	EZIB72-4L	78894	193	EZP1-UHT254	91233	14	EZPTBTHD	77385	20
EZBMK-48	78948	198	EZIB72-4M	78910	196	EZP1-UHT260	91234	14	EZPTCK	78508	20
EZBMK-54	78949	195	EZIB72-5L	78902	193	EZP1-UHT272	91235	14	EZPTCKHD	78509	20
EZBMK-54	78949	198	EZIB72-5M	78918	196	EZP1-UHT818	91236	14	EZPTMPK	78507	20
EZBMK-60	78950	195	EZIRMK	79318	192	EZP1-UHT824	91237	14	EZPTSK	78511	20
EZBMK-60	78950	198	EZP-LS212	77127	25	EZP1-UHT830	91238	14	EZPTSKHD	78512	20
EZBMK-72	78951	195	EZP-LS212HT	77746	26	EZP1-UHT836	91239	14	EZPTSR	78510	20
EZBMK-72	78951	198	EZP-LS218	77128	25	EZP1-UHT842	91240	14	EZRMK	78952	189
EZBS-L4	78953	192	EZP-LS218HT	77747	26	EZP1-UHT848	91241	14	EZS2-18	75643	89
EZBS-L4	78953	195	EZP-LS224	77129	25	EZP1-UHT854	91242	14	EZS2-24	75644	89
EZBS-L5	78954	192	EZP-LS224HT	77748	26	EZP1-UHT860	91243	14	EZS2-30	75645	89
EZBS-L5	78954	195	EZP-LS230	77130	25	EZP1-UHT872	91244	14	EZS2-36	75646	89
EZCRMK24-48	90434	192	EZP-LS230HT	77749	26	EZP1BP	75642	19	EZS2-42	75647	89
EZCRMK54-60	90261	192	EZP-LS236	77131	25	EZP1BP	75642	20	EZS2-48	75648	89
EZCRMK72	90262	192	EZP-LS236HT	77750	26	EZP1BP	75642	169	EZS2-54	75649	89
EZCSK-24	78978	189	EZP-LS242	77132	25	EZP1BP	75642	173	EZS2-60	75650	89
EZCSK-24	78978	192	EZP-LS242HT	77751	26	EZP1BP	75642	174	EZS2-72	75651	89
EZCSK-24	78978	195	EZP-LS248	77133	25	EZP1MPK	75637	19	EZS2MBK	75666	92
EZCSK-24	78978	198	EZP-LS248HT	77752	26	EZP1MPK-S/S	78923	24	EZS2MBK	75666	104
EZCSK-30	78979	189	EZP-LS254	77134	25	EZP1OTK1	76418	19	EZS2MBK	75666	107
EZCSK-30	78979	192	EZP-LS254HT	77753	26	EZP1OTK2	76419	19	EZS2MBK	75666	126
EZCSK-30	78979	195	EZP-LS260	77135	25	EZP1P12	75619	19	EZS2MBK	75666	130
EZCSK-30	78979	198	EZP-LS260HT	77754	26	EZP1P12	75619	20	EZS2MBK	75666	148
EZCSK-36	78980	189	EZP-LS818	77136	25	EZP1P12-S/S	78812	24	EZS2MBK	75666	166
EZCSK-36	78980	192	EZP-LS824	77137	25	EZP1P18	75620	19	EZS2P18	75652	92
EZCSK-36	78980	195	EZP-LS830	77138	25	EZP1P18	75620	20	EZS2P18	75652	166
EZCSK-36	78980	198	EZP-LS836	77139	25	EZP1P18-S/S	78813	24	EZS2P24	75653	92
EZCSK-42	78981	189	EZP-LS842	77140	25	EZP1P24	75621	19	EZS2P24	75653	166
EZCSK-42	78981	192	EZP-LS848	77141	25	EZP1P24	75621	20	EZS2P30	75654	92
EZCSK-42	78981	195	EZP-LS854	77142	25	EZP1P24-S/S	78814	24	EZS2P30	75654	166
EZCSK-42	78981	198	EZP-LS860	77143	25	EZP1P30	75622	19	EZS2P36	75655	92
EZCSK-48	78982	189	EZP1-212	75610	11	EZP1P30	75622	20	EZS2P36	75655	166
EZCSK-48	78982	192	EZP1-212W	78934	15	EZP1P30-S/S	78815	24	EZS2P42	75656	92
EZCSK-48	78982	195	EZP1-218	75611	11	EZP1P36	75623	19	EZS2P42	75656	166
EZCSK-48	78982	198	EZP1-218W	78935	15	EZP1P36	75623	20	EZS2P48	75657	92
EZCSK-54	78983	189	EZP1-224	75612	11	EZP1P36-S/S	78816	24	EZS2P48	75657	166
EZCSK-54	78983	192	EZP1-224W	78936	15	EZP1P42	75624	19	EZS2P54	75658	92
EZCSK-54	78983	195	EZP1-230	75613	11	EZP1P42	75624	20	EZS2P54	75658	166
EZCSK-54	78983	198	EZP1-230W	78937	15	EZP1P42-S/S	78817	24	EZS2P60	75659	92
EZCSK-60	78984	189	EZP1-236	75614	11	EZP1P48	75625	19	EZS2P60	75659	166
EZCSK-60	78984	192	EZP1-236W	78938	15	EZP1P48	75625	20	EZS2P72	75660	92
EZCSK-60	78984	195	EZP1-242	75615	11	EZP1P48-S/S	78818	24	EZS2P72	75660	166
EZCSK-60	78984	198	EZP1-242W	78939	15	EZP1P54	75626	19	EZSB24-4C	78855	187
EZCSK-72	78985	189	EZP1-248	75616	11	EZP1P54	75626	20	EZSB24-4I	78871	190
EZCSK-72	78985	192	EZP1-248W	78940	15	EZP1P54-S/S	78819	24	EZSB24-5C	78863	187
EZCSK-72	78985	195	EZP1-254	75617	11	EZP1P60	75627	19	EZSB24-5I	78879	190
EZCSK-72	78985	198	EZP1-254W	78941	15	EZP1P60	75627	20	EZSB30-4C	78856	187
EZIB24-4L	78887	193	EZP1-260	75618	11	EZP1P60-S/S	78820	24	EZSB30-4I	78872	190
EZIB24-4M	78903	196	EZP1-260W	78942	15	EZP1P72	75772	19	EZSB30-5C	78864	187
EZIB24-5L	78895	193	EZP1-272	75771	11	EZP1P72	75772	20	EZSB30-5I	78880	190
EZIB24-5M	78911	196	EZP1-272W	78943	15	EZP1P72-S/S	78821	24	EZSB36-4C	78857	187
EZIB30-4L	78888	193	EZP1-818	75779	11	EZP1PL	75641	19	EZSB36-4I	78873	190
EZIB30-4M	78904	196	EZP1-824	75780	11	EZP1PL	75641	20	EZSB36-5C	78865	187
EZIB30-5L	78896	193	EZP1-830	75781	11	EZP1PL	75641	165	EZSB36-5I	78881	190
EZIB30-5M	78912	196	EZP1-836	75782	11	EZP1PL-S/S	78848	24	EZSB42-4C	78858	187
EZIB36-4L	78889	193	EZP1-842	75783	11	EZP1T-212	78488	12	EZSB42-4I	78874	190
EZIB36-4M	78905	196	EZP1-848	75784	11	EZP1T-218	78489	12	EZSB42-5C	78866	187
EZIB36-5L	78897	193	EZP1-854	75785	11	EZP1T-224	78490	12	EZSB42-5I	78882	190
EZIB36-5M	78913	196	EZP1-860	75786	11	EZP1T-230	78491	12	EZSB48-4C	78859	187
EZIB42-4L	78890	193	EZP1-872	75774	11	EZP1T-236	78492	12	EZSB48-4I	78875	190
EZIB42-4M	78906	196	EZP1-UHT1424	91245	14	EZP1T-242	78493	12	EZSB48-5C	78867	187
EZIB42-5L	78898	193	EZP1-UHT1430	91246	14	EZP1T-248	78494	12	EZSB48-5I	78883	190
EZIB42-5M	78914	196	EZP1-UHT1436	91247	14	EZP1T-254	78495	12	EZSB54-4C	78860	187
EZIB48-4L	78891	193	EZP1-UHT1442	91248	14	EZP1T-260	78496	12	EZSB54-4I	78876	190
EZIB48-4M	78907	196	EZP1-UHT1448	91249	14	EZP1T-272	78497	12	EZSB54-5C	78868	187
EZIB48-5L	78899	193	EZP1-UHT1454	91250	14	EZP1T-818	78498	12	EZSB54-5I	78884	190
EZIB48-5M	78915	196	EZP1-UHT1460	91251	14	EZP1T-824	78499	12	EZSB60-4C	78861	187
EZIB54-4L	78892	193	EZP1-UHT1472	91252	14	EZP1T-830	78500	12	EZSB60-4I	78877	190
EZIB54-4M	78908	196	EZP1-UHT212	91226	14	EZP1T-836	78501	12	EZSB60-5C	78869	187
EZIB54-5L	78900	193	EZP1-UHT218	91227	14	EZP1T-842	78502	12	EZSB60-5I	78885	190
EZIB54-5M	78916	196	EZP1-UHT224	91228	14	EZP1T-848	78503	12	EZSB72-4C	78862	187
EZIB60-4L	78893	193	EZP1-UHT230	91229	14	EZP1T-854	78504	12	EZSB72-4I	78878	190
EZIB60-4M	78909	196	EZP1-UHT236	91230	14	EZP1T-860	78505	12	EZSB72-5C	78870	187

Index *by Ordering Number*

ORDERING NUMBER	ITEM CODE	PAGE	ORDERING NUMBER	ITEM CODE	PAGE	ORDERING NUMBER	ITEM CODE	PAGE	ORDERING NUMBER	ITEM CODE	PAGE
EZSB72-5I	78886	190	FMS-18V-SSTXD	92194	109	HDR54	79015	163	HTS42	76089	90
EZWPK-24	78970	189	FMS-24	79638	108	HDR60	79016	163	HTS48	76090	90
EZWPK-24	78970	192	FMS-24-SSTXD	92186	109	HDRBK	79009	163	HTS54	76091	90
EZWPK-24	78970	195	FMS-24V	79647	108	HDRBK-HD	79072	163	HTS60	76092	90
EZWPK-24	78970	198	FMS-24V-SSTXD	92195	109	HDRGEK	79236	163	HTS72	76093	90
EZWPK-30	78971	189	FMS-30	79639	108	HDRR24	79019	163	HTSCK	76094	90
EZWPK-30	78971	192	FMS-30-SSTXD	92187	109	HDRR30	79020	163	HTSCK	76094	92
EZWPK-30	78971	195	FMS-30V	79648	108	HDRR36	79021	163	HTTS	74141	164
EZWPK-30	78971	198	FMS-30V-SSTXD	92196	109	HDRR42	79022	163	HTTS-HT	79068	88
EZWPK-36	78972	189	FMS-36	79640	108	HDRR48	79023	163	HTV18S	74828	88
EZWPK-36	78972	192	FMS-36-SSTXD	92188	109	HDRR54	79024	163	HTV18SS	74821	88
EZWPK-36	78972	195	FMS-36V	79649	108	HDRR60	79025	163	HTV24S	74829	88
EZWPK-36	78972	198	FMS-36V-SSTXD	92197	109	HDRRS72*	79026	163	HTV24SS	74822	88
EZWPK-42	78973	189	FMS-42	79641	108	HDRRS84*	79027	163	HTV30S	74830	88
EZWPK-42	78973	192	FMS-42-SSTXD	92189	109	HDRS72*	79017	163	HTV30SS	74823	88
EZWPK-42	78973	195	FMS-42V	79650	108	HDRS84*	79018	163	HTV36M	74838	88
EZWPK-42	78973	198	FMS-42V-SSTXD	92198	109	HDTS	74502	19	HTV36S	74831	88
EZWPK-48	78974	189	FMS-48	79642	108	HDTS	74502	137	HTV36SS	74824	88
EZWPK-48	78974	192	FMS-48-SSTXD	92190	109	HDTS	74502	165	HTV42M	74839	88
EZWPK-48	78974	195	FMS-48V	79651	108	HFC2	75901	87	HTV42S	74832	88
EZWPK-48	78974	198	FMS-48V-SSTXD	92199	109	HFC2	75901	165	HTV42SS	74825	88
EZWPK-54	78975	189	FMS-54	79643	108	HOBK	76399	80	HTV48M	74840	88
EZWPK-54	78975	192	FMS-54-SSTXD	92191	109	HOBK	76399	87	HTV48S	74833	88
EZWPK-54	78975	195	FMS-54V	79652	108	HP-18	78990	165	HTV48SS	74826	88
EZWPK-54	78975	198	FMS-54V-SSTXD	92200	109	HP-24	78991	165	HV-18M	76191	83
EZWPK-60	78976	189	FMS-60	79644	108	HP-30	78992	165	HV-18S	76190	83
EZWPK-60	78976	192	FMS-60-SSTXD	92192	109	HP-36	78993	165	HV-18SS	76101	83
EZWPK-60	78976	195	FMS-60V	79653	108	HP-42	78994	165	HV-24M	76193	83
EZWPK-60	78976	198	FMS-60V-SSTXD	92201	109	HP-48	78995	165	HV-24S	76192	83
EZWPK-72	78977	189	FMS-72	79645	108	HP-54	78996	165	HV-24SS	76102	83
EZWPK-72	78977	192	FMS-72-SSTXD	92193	109	HP-60	78997	165	HV-30M	76195	83
EZWPK-72	78977	195	FMS-72V	79654	108	HP-72	78998	165	HV-30S	76194	83
EZWPK-72	78977	198	FMS-72V-SSTXD	92202	109	HPS8	73050	165	HV-30SS	76103	83
FFCK	75661	92	FMSC	79699	111	HSA8L	73063	83	HV-36L	76198	83
FL-ACT	70186	250	FMSC	79699	112	HSA8L	73063	85	HV-36M	76197	83
FL-ADH-0.8	75017	250	H-MK1	78987	165	HSA8L	73063	87	HV-36S	76196	83
FL-CP-I	71141	241	H-MK2	78801	165	HSA8L	73063	165	HV-36SS	76104	83
FL-CP-I	71141	241	H2P18	79358	80	HSA8LL	73064	83	HV-42L	76252	83
FL-CP-ISS	71164	241	H2P24	79359	80	HSA8LL	73064	85	HV-42LL	76253	83
FL-L	76470	245	H2P30	79360	80	HSA8LL	73064	87	HV-42M	76251	83
FL-M	76469	245	H2P36	79361	80	HSA8LL	73064	165	HV-42S	76199	83
FL-PC-I	71057	241	H2P42	79362	80	HSA8M	73049	83	HV-42SS	76105	83
FL-PC-ISS	71168	241	H2P48	79363	80	HSA8M	73049	85	HV-48L	76256	83
FL-PKIT-ML	77250	245	H2P54	79364	80	HSA8M	73049	87	HV-48LL	76257	83
FL-PKIT-XL	77251	245	H2P60	79365	80	HSA8M	73049	88	HV-48M	76255	83
FL-PR-0.75	70189	250	H2P72	79366	80	HSA8M	73049	165	HV-48S	76254	83
FL-RBI	71060	241	H2RC	79374	80	HSA8S	73048	83	HV-48SS	76106	83
FL-RBI	71060	241	H2SA6L	79372	78	HSA8S	73048	85	HV-54L	76259	83
FL-RPI	71058	241	H2SA6L	79372	80	HSA8S	73048	88	HV-54LL	76260	83
FL-RPI	71058	241	H2SA6LL	79373	78	HSA8S	73048	165	HV-54M	76258	83
FL-XL	76983	245	H2SA6LL	79373	80	HSA8S	73048	87	HV-54S	76107	83
FLCK	77729	245	H2SA6M	79371	78	HSA8SS	73047	83	HV-60L	76262	83
FLCP	76479	245	H2SA6M	79371	80	HSA8SS	73047	85	HV-60LL	76263	83
FLEL-L	76473	245	H2SA6S	79370	78	HSA8SS	73047	87	HV-60M	76261	83
FLEL-M	76472	245	H2SA6S	79370	80	HSA8SS	73047	88	HV-60S	76108	83
FLELK-XL	76986	245	H2SA6SS	79369	78	HSA8SS	73047	165	HV-72L	76265	83
FLELP	76474	245	H2SA6SS	79369	80	HSA8SSS	75565	165	HV-72LL	76266	83
FLM-PC	71140	241	H78P18	76110	87	HSSCS	74772	87	HV-72M	76264	83
FLRLB-L	76481	245	H78P24	76111	87	HSSCS	74772	165	HV-72S	76109	83
FLRLB-M	76482	245	H78P30	76112	87	HSSTS	74771	87	HV2-18M	79325	78
FLRP	76478	245	H78P36	76113	87	HSSTS	74771	165	HV2-18S	79324	78
FLSC-I	71052	241	H78P42	76114	87	HTF212	76658	13	HV2-18SS	79323	78
FLSC-I-50	71054	241	H78P48	76115	87	HTF218	76659	13	HV2-24M	79328	78
FLSC-ISS	75778	241	H78P54	76116	87	HTF224	76660	13	HV2-24S	79327	78
FLSCM-I	71055	241	H78P60	76117	87	HTF230	76661	13	HV2-24SS	79326	78
FLSCM-I-50	71100	241	H78P72	76118	87	HTF236	76662	13	HV2-30M	79331	78
FLTW-L	76477	245	HAR-K	78786	19	HTF242	76663	13	HV2-30S	79330	78
FLTW-M	76476	245	HAR-K	78786	165	HTF248	76664	13	HV2-30SS	79329	78
FLTW-XL	76985	245	HBTK	74776	165	HTF254	76665	13	HV2-36L	79335	78
FLVRL-XL	76984	245	HDARK	74550	165	HTF260	76666	13	HV2-36M	79334	78
FLXCP	91430	134	HDR24	79010	163	HTF272	76667	13	HV2-36S	79333	78
FLXEP	91431	134	HDR30	79011	163	HTS18	76085	90	HV2-36SS	79332	78
FMS-18	79637	108	HDR36	79012	163	HTS24	76086	90	HV2-42L	79339	78
FMS-18-SSTXD	92185	109	HDR42	79013	163	HTS30	76087	90	HV2-42LL	79340	78
FMS-18V	79646	108	HDR48	79014	163	HTS36	76088	90	HV2-42M	79338	78

Index *by Ordering Number*

ORDERING NUMBER	ITEM CODE	PAGE
HV2-42S	79337	78
HV2-42SS	79336	78
HV2-48L	79344	78
HV2-48LL	79345	78
HV2-48M	79343	78
HV2-48S	79342	78
HV2-48SS	79341	78
HV2-54L	79348	78
HV2-54LL	79349	78
HV2-54M	79347	78
HV2-54S	79346	78
HV2-60L	79352	78
HV2-60LL	79353	78
HV2-60M	79351	78
HV2-60S	79350	78
HV2-72L	79356	78
HV2-72LL	79357	78
HV2-72M	79355	78
HV2-72S	79354	78
HV2PT	79368	78
HV2PT	79368	80
HV2SSTS	79375	80
HV2T-S/S	79367	78
HV2T-S/S	79367	80
HVP-18L	76268	85
HVP-18M	76267	85
HVP-18S	76124	85
HVP-24L	76270	85
HVP-24M	76269	85
HVP-24S	76125	85
HVP-30L	76272	85
HVP-30M	76271	85
HVP-30S	76126	85
HVP-36L	76274	85
HVP-36M	76273	85
HVP-36S	76127	85
HVP-42L	76276	85
HVP-42M	76275	85
HVP-42S	76128	85
HVP-48L	76278	85
HVP-48LL	76279	85
HVP-48M	76277	85
HVP-48S	76129	85
HVP-54L	76281	85
HVP-54LL	76282	85
HVP-54M	76280	85
HVP-54S	76130	85
HVP-60L	76284	85
HVP-60LL	76285	85
HVP-60M	76283	85
HVP-60S	76131	85
HVP-72L	76287	85
HVP-72LL	76288	85
HVP-72M	76286	85
HVP-72S	76132	85
HVPT	73631	85
HVPT	73631	87
HVPT	73631	165
HVT8-S/S	75419	83
HVT8-S/S	75419	87
HVT8-S/S	75419	88
HVT8-S/S	75419	165
HW-BC	74100	164
HW-IMPB	76939	214
HXF2-18M	76290	81
HXF2-18S	76289	81
HXF2-18SS	76138	81
HXF2-24M	76292	81
HXF2-24S	76291	81
HXF2-24SS	76139	81
HXF2-30M	76294	81
HXF2-30S	76293	81
HXF2-30SS	76140	81
HXF2-36L	76297	81
HXF2-36M	76296	81
HXF2-36S	76295	81
HXF2-36SS	76141	81
HXF2-42L	76300	81
HXF2-42M	76299	81
HXF2-42S	76298	81
HXF2-42SS	76142	81
HXF2-48L	76303	81
HXF2-48M	76302	81
HXF2-48S	76301	81
HXF2-48SS	76143	81
HXF2-54L	76306	81
HXF2-54M	76305	81
HXF2-54S	76304	81
HXF2-54SS	76144	81
HXF2-60L	76308	81
HXF2-60M	76307	81
HXF2-60S	76145	81
HXF2-72L	76310	81
HXF2-72M	76309	81
HXF2-72S	76146	81
HXF2-L	75982	81
HXF2-L	75982	87
HXF2-L	75982	165
HXF2-M	75981	81
HXF2-M	75981	87
HXF2-M	75981	165
HXF2-S	75980	81
HXF2-S	75980	87
HXF2-S	75980	165
HXF2-SS	75979	81
HXF2-SS	75979	87
HXF2-SS	75979	165
HXF8L	74691	81
HXF8L	74691	165
HXF8M	74690	81
HXF8M	74690	165
HXF8S	74689	81
HXF8S	74689	165
HXF8SS	74307	81
HXF8SS	74307	165
HXFC2	75902	87
HXFC2	75902	165
IB4	76926	192
IB4	76926	195
IB4	76926	198
IB4	76926	206
IB4	76926	208
IB4	76926	210
IB4-1U	76965	214
IB5	76927	192
IB5	76927	195
IB5	76927	198
IB5	76927	206
IB5	76927	208
IB5	76927	210
IB5	76927	212
IB5-1U	76966	214
IBBK	76928	189
IBBK	76928	192
IBBK	76928	195
IBBK	76928	198
IBBK	76928	206
IBBK	76928	208
IBBK	76928	210
IBBK	76928	212
IBS-D5	77530	212
IBS-H4	76933	210
IBS-H5	76934	210
IBS-L4	76929	206
IBS-L5	76930	206
IBS-M4	76931	198
IBS-M4	76931	208
IBS-M5	76932	198
IBS-M5	76932	208
ICT6	74535	89
ICT6	74535	90
ICT6	74535	92
ICT6	74535	101
ICT6	74535	102
ICT6	74535	104
ICT6	74535	105
ICT6	74535	107
ICT6	74535	108
ICT6	74535	111
ICT6	74535	112
ICT6	74535	113
ICT6	74535	114
ICT6	74535	116
ICT6	74535	120
ICT6	74535	122
ICT6	74535	123
ICT6	74535	126
ICT6	74535	127
ICT6	74535	130
ICT6	74535	131
ICT6	74535	134
ICT6	74535	166
ICT6	74535	109
ICT6-S/S	78700	122
IDHINGE	79316	157
IDLATCH	79317	157
IDSC-1212	79311	157
IDSC-1218	79312	157
IDSC-1824	79313	157
IDSC-2424	79314	157
IDSEAL	79315	157
IEA-42-60	76937	212
IEA-72-96	76938	212
IMK	76936	206
IMK	76936	208
IMK	76936	210
INDR-1212	79303	157
INDR-1212S	79307	157
INDR-1218	79304	157
INDR-1218S	79308	157
INDR-1824	79305	157
INDR-1824S	79309	157
INDR-2424	79306	157
INDR-2424S	79310	157
ISABK	76935	212
ISABK-LMH	77529	206
ISABK-LMH	77529	208
ISABK-LMH	77529	210
ISC	74534	166
JNK-A	79891	19
JNK-B	79892	29
JNK-C	79893	39
JNK-C	79893	47
JNK-C	79893	54
JNK-C	79893	80
JNK-C	79893	87
JNK-C	79893	120
JNK-C	79893	137
JNK-C	79893	141
JNK-D	79894	61
JNK-D	79894	68
JNK-D	79894	73
JNK-F	79896	137
LA-24	91762	237
LA-30	91763	237
LA-36	91764	237
LA-42	91765	237
LA-48	91766	237
LA-54	91835	237
LA-60	91836	237
LA-66	91837	237
LA-72	91838	237
LA-84	91839	237
LA-96	91840	237
LAGGING-TB	79080	250
LAGGING-TB2	79099	250
LS-BP	77114	29
LS-BP-S/S	77115	33
LS-SPK	77365	29
LS-SS	77118	29
LS-SW	77117	29
LS-SW-S/S	78850	33
LSHD-RPK	30390	246
LSHD30	30393	246
LSHD36	30394	246
LSHD42	30395	246
LSHD48	30396	246
LSHD54	30397	246
LSHD60	30398	246
LSHD72	30399	246
LSHDB30-2	30418	246
LSHDB36-2	30414	246
LSHDB42-2	30421	246
LSHDB48-2	30423	246
LSHDB54-2	30424	246
LSHDB60-2	30430	246
LSHDB72-2	30408	246
LSHDCBS	30373	246
LSHDLP	30400	246
LSHDPP	30052	246
LSHDS	30392	246
LSP12	77070	29
LSP12-S/S	77079	33
LSP18	77071	29
LSP18-S/S	77080	33
LSP24	77072	29
LSP24-S/S	77081	33
LSP30	77073	29
LSP30-S/S	77082	33
LSP36	77074	29
LSP36-S/S	77083	33
LSP42	77075	29
LSP42-S/S	77084	33
LSP48	77076	29
LSP48-S/S	77085	33
LSP54	77077	29
LSP54-S/S	77086	33
LSP60	77078	29
LSP60-S/S	77087	33
LST-B-S/S	77124	33
LST-P	77121	29
LST-S	77123	29
LST-TAK	77120	29
LST-W	77122	29
LST-W-S/S	77125	33
LST-W-S/S-2	77126	33
LSTMPK	77366	29
LSTMPK-S/S	78933	33
LSTMPK2-S/S	78462	33
LSTPB-RK	77367	29
MAK	74918	231
MAK2	79381	231
MAK2-S/S	90048	232
MAKHD	74919	231
MAKHD2	79382	231
MAKHD2-S/S	90049	232
MAKSD	74920	231
MAKSD-S/S	90057	232
MAPEK	76024	155
MBADB	79527	144
MBC-18	79494	142
MBC-18-575V	79914	142
MBC-18-575V-S	91581	142
MBC-18-S	91571	142
MBC-24	79495	142
MBC-24-575V	79915	142
MBC-24-575V-S	91582	142
MBC-24-S	91572	142
MBC-30	79496	142
MBC-30-575V	79916	142

Index *by Ordering Number*

ORDERING NUMBER	ITEM CODE	PAGE
MBC-30-575V-S	91583	142
MBC-30-S	91573	142
MBC-36	79497	142
MBC-36-575V	79917	142
MBC-36-575V-S	91584	142
MBC-36-S	91574	142
MBC-42	79498	142
MBC-42-575V	79918	142
MBC-42-575V-S	91585	142
MBC-42-S	91575	142
MBC-48	79499	142
MBC-48-575V	79919	142
MBC-48-575V-S	91586	142
MBC-48-S	91576	142
MBC-54	79500	142
MBC-54-575V	79920	142
MBC-54-575V-S	91587	142
MBC-54-S	91577	142
MBC-60	79501	142
MBC-60-575V	79921	142
MBC-60-575V-S	91588	142
MBC-60-S	91578	142
MBC-72	79502	142
MBC-72-575V	79922	142
MBC-72-575V-S	91589	142
MBC-72-S	91579	142
MBC-84	79503	142
MBC-84-575V	79923	142
MBC-84-575V-S	91590	142
MBC-84-S	91580	142
MBCB	79526	144
MBCBC	79525	144
MBCBL	79532	144
MBCBM	79528	144
MBCDBK	79536	142
MBCDBK	79536	144
MBCDBK	79536	145
MBCDBK	79536	155
MBCDBK	79536	147
MBCEC	79534	144
MBCM-1	79529	144
MBCM-1-S	91591	144
MBCM-2	79530	144
MBCM-2-S	91592	144
MBCM-575-1	79924	144
MBCM-575-1-S	91593	144
MBCM-575-2	79925	144
MBCM-575-2-S	91594	144
MBCMK	79524	144
MBCMKK	79533	144
MBCTA	79531	144
MBDS-18	79504	144
MBDS-24	79505	144
MBDS-30	79506	144
MBDS-36	79507	144
MBDS-42	79508	144
MBDS-48	79509	144
MBDS-54	79510	144
MBDS-60	79511	144
MBDS-72	79512	144
MBDS-84	79513	144
MBRD-18	79514	142
MBRD-18	79514	144
MBRD-24	79515	142
MBRD-24	79515	144
MBRD-24	79515	145
MBRD-24	79515	147
MBRD-30	79516	142
MBRD-30	79516	144
MBRD-30	79516	145
MBRD-30	79516	147
MBRD-36	79517	142
MBRD-36	79517	144
MBRD-36	79517	145
MBRD-36	79517	147
MBRD-42	79518	142
MBRD-42	79518	144
MBRD-42	79518	145
MBRD-42	79518	147
MBRD-48	79519	142
MBRD-48	79519	144
MBRD-48	79519	145
MBRD-48	79519	147
MBRD-54	79520	142
MBRD-54	79520	144
MBRD-54	79520	145
MBRD-54	79520	147
MBRD-60	79521	142
MBRD-60	79521	144
MBRD-60	79521	145
MBRD-60	79521	147
MBRD-72	79522	142
MBRD-72	79522	144
MBRD-72	79522	145
MBRD-72	79522	147
MBRD-84	79523	142
MBRD-84	79523	144
MCB	74925	230
MCB	74925	231
MCB	74925	232
MCBK	76025	230
MCBK	76025	231
MCBK	76025	232
MCBKHD	76026	230
MCBKHD	76026	231
MCBKHD	76026	232
MCBKSD	76027	231
MCBKSD	76027	232
MCBSD	74926	231
MCBSD	74926	232
MCRK	74923	230
MCRK	74923	231
MCRK	74923	232
MCRKSD	74924	231
MCRKSD	74924	232
MCS	74930	230
MCS	74930	231
MCS	74930	232
MCSHD	74931	230
MCSHD	74931	231
MCSHD	74931	232
MCSK	74927	230
MCSK	74927	231
MCSK	74927	232
MCSKHD	74928	230
MCSKHD	74928	231
MCSKHD	74928	232
MCSKSD	74929	231
MCSKSD	74929	232
MCSSD	74932	231
MCSSD	74932	232
MDWS-24	75868	138
MDWS-24P	78745	138
MDWS-30	75869	138
MDWS-30P	78746	138
MDWS-36	75870	138
MDWS-36P	78747	138
MDWS-42	75871	138
MDWS-42P	78748	138
MDWS-48	75872	138
MDWS-48P	78749	138
MDWS-54	75873	138
MDWS-54P	78750	138
MDWS-60	75874	138
MDWS-60P	78751	138
MDWS-72	75875	138
MDWS-72P	78752	138
MDWS-84	76806	138
MDWS-84P	78753	138
MDWS-96	79063	138
MDWS-96P	79064	138
MFASK	75531	231
MFASKHD	79571	231
MFASKHD-S/S	90050	232
MHCP-24P	78723	69
MHCP-24S	75929	69
MHCP-2BC24	76638	73
MHCP-2BC30	76639	73
MHCP-2BC36	76640	73
MHCP-2BC42	76641	73
MHCP-2BC48	76642	73
MHCP-2BC54	76643	73
MHCP-2BC60	76644	73
MHCP-2BC72	76645	73
MHCP-2BC84	76812	73
MHCP-2BC96	78986	73
MHCP-30P	78724	69
MHCP-30S	75930	69
MHCP-36P	78725	69
MHCP-36S	75931	69
MHCP-42P	78726	69
MHCP-42S	75932	69
MHCP-48P	78727	69
MHCP-48S	75933	69
MHCP-54P	78728	69
MHCP-54S	75934	69
MHCP-60P	78729	69
MHCP-60S	75935	69
MHCP-72P	78730	69
MHCP-72S	75936	69
MHCP-84P	78731	69
MHCP-84S	76800	69
MHCP-96P	78959	69
MHCP-96S	78955	69
MHCP-BCK24	75953	71
MHCP-BCK30	75954	71
MHCP-BCK36	75955	71
MHCP-BCK42	75956	71
MHCP-BCK48	75957	71
MHCP-BCK54	75958	71
MHCP-BCK60	75959	71
MHCP-BCK72	75960	71
MHCP-BCK84	76810	71
MHCP-BCK96	78957	71
MHCP-BPA24	75945	71
MHCP-BPA30	75946	71
MHCP-BPA36	75947	71
MHCP-BPA42	75948	71
MHCP-BPA48	75949	71
MHCP-BPA54	75950	71
MHCP-BPA60	75951	71
MHCP-BPA72	75952	71
MHCP-BPA84	76809	71
MHCP-BPA96	78956	71
MHCP-BS	76394	73
MHCP-CH	76393	73
MHP-12108	90153	55
MHP-12108-UG	92074	62
MHP-12108P	90161	56
MHP-12108P-UG	92119	63
MHP-12120	90154	55
MHP-12120-UG	93441	62
MHP-12120P	90162	56
MHP-12120P-UG	93443	63
MHP-1230	77713	55
MHP-1230P	78609	56
MHP-1236	77714	55
MHP-1236P	78610	56
MHP-1242	77715	55
MHP-1242P	78611	56
MHP-1248	77716	55
MHP-1248-UG	92068	62
MHP-1248P	78612	56
MHP-1248P-UG	92113	63
MHP-1254	77717	55
MHP-1254-UG	92069	62
MHP-1254P	78613	56
MHP-1254P-UG	92114	63
MHP-1260	77718	55
MHP-1260-UG	92070	62
MHP-1260P	78614	56
MHP-1260P-UG	92115	63
MHP-1272	77719	55
MHP-1272-UG	92071	62
MHP-1272P	78615	56
MHP-1272P-UG	92116	63
MHP-1284	77720	55
MHP-1284-UG	92072	62
MHP-1284P	78616	56
MHP-1284P-UG	92117	63
MHP-1296	77721	55
MHP-1296-UG	92073	62
MHP-1296P	78617	56
MHP-1296P-UG	92118	63
MHP-18108	90155	55
MHP-18108-UG	92081	62
MHP-18108P	90163	56
MHP-18108P-UG	92126	63
MHP-18120	90156	55
MHP-18120-UG	92082	62
MHP-18120P	90164	56
MHP-18120P-UG	92127	63
MHP-1836	78591	55
MHP-1836P	78618	56
MHP-1842	78592	55
MHP-1842P	78619	56
MHP-1848	78593	55
MHP-1848-UG	92075	62
MHP-1848P	78620	56
MHP-1848P-UG	92120	63
MHP-1854	78594	55
MHP-1854-UG	92076	62
MHP-1854P	78621	56
MHP-1854P-UG	92121	63
MHP-1860	78595	55
MHP-1860-UG	92077	62
MHP-1860P	78622	56
MHP-1860P-UG	92122	63
MHP-1872	78596	55
MHP-1872-UG	92078	62
MHP-1872P	78623	56
MHP-1872P-UG	92123	63
MHP-1884	78597	55
MHP-1884-UG	92079	62
MHP-1884P	78624	56
MHP-1884P-UG	92124	63
MHP-1896	78598	55
MHP-1896-UG	92080	62
MHP-1896P	78625	56
MHP-1896P-UG	92125	63
MHP-24108	90157	55
MHP-24108-UG	92089	62
MHP-24108P	90165	56
MHP-24108P-UG	92134	63
MHP-24120	90158	55
MHP-24120-UG	92090	62
MHP-24120P	90166	56
MHP-24120P-UG	92135	63
MHP-2442	78669	55
MHP-2442P	78676	56
MHP-2448	78670	55
MHP-2448-UG	92083	62
MHP-2448P	78677	56
MHP-2448P-UG	92128	63
MHP-2454	78671	55
MHP-2454-UG	92084	62
MHP-2454P	78678	56
MHP-2454P-UG	92129	63
MHP-2460	78672	55
MHP-2460-UG	92085	62

Index *by Ordering Number*

ORDERING NUMBER	ITEM CODE	PAGE
MHP-2460P	78679	56
MHP-2460P-UG	92130	63
MHP-2472	78673	55
MHP-2472-UG	92086	62
MHP-2472P	78680	56
MHP-2472P-UG	92131	63
MHP-2484	78674	55
MHP-2484-UG	92087	62
MHP-2484P	78681	56
MHP-2484P-UG	92132	63
MHP-2496	78675	55
MHP-2496-UG	92088	62
MHP-2496P	78682	56
MHP-2496P-UG	92133	63
MHP-30108-UG	92097	62
MHP-30108P-UG	92142	63
MHP-30120-UG	92098	62
MHP-30120P-UG	92143	63
MHP-3048-UG	92091	62
MHP-3048P-UG	92136	63
MHP-3054-UG	92092	62
MHP-3054P-UG	92137	63
MHP-3060-UG	92093	62
MHP-3060P-UG	92138	63
MHP-3072-UG	92094	62
MHP-3072P-UG	92139	63
MHP-3084-UG	92095	62
MHP-3084P-UG	92140	63
MHP-3096-UG	92096	62
MHP-3096P-UG	92141	63
MHP-36108-UG	92104	62
MHP-36108P-UG	92149	63
MHP-36120-UG	92105	62
MHP-36120P-UG	92150	63
MHP-3654-UG	92099	62
MHP-3654P-UG	92144	63
MHP-3660-UG	92100	62
MHP-3660P-UG	92145	63
MHP-3672-UG	92101	62
MHP-3672P-UG	92146	63
MHP-3684-UG	92102	62
MHP-3684P-UG	92147	63
MHP-3696-UG	92103	62
MHP-3696P-UG	92148	63
MHP-6108	90151	55
MHP-6108-UG	92067	62
MHP-6108P	90159	56
MHP-6108P-UG	92112	63
MHP-6120	90152	55
MHP-6120-UG	93440	62
MHP-6120P	90160	56
MHP-6120P-UG	93442	63
MHP-624	77703	55
MHP-624P	78599	56
MHP-630	77704	55
MHP-630P	78600	56
MHP-636	77705	55
MHP-636P	78601	56
MHP-642	77706	55
MHP-642P	78602	56
MHP-648	77707	55
MHP-648-UG	92061	62
MHP-648P	78603	56
MHP-648P-UG	92106	63
MHP-654	77708	55
MHP-654-UG	92062	62
MHP-654P	78604	56
MHP-654P-UG	92107	63
MHP-660	77709	55
MHP-660-UG	92063	62
MHP-660P	78605	56
MHP-660P-UG	92108	63
MHP-672	77710	55
MHP-672-UG	92064	62
MHP-672P	78606	56
MHP-672P-UG	92109	63
MHP-684	77711	55
MHP-684-UG	92065	62
MHP-684P	78607	56
MHP-684P-UG	92110	63
MHP-696	77712	55
MHP-696-UG	92066	62
MHP-696P	78608	56
MHP-696P-UG	92111	63
MHP-CP24	75961	73
MHP-CP30	75962	73
MHP-CP36	75963	73
MHP-CP42	75964	73
MHP-CP48	75965	73
MHP-CP54	75966	73
MHP-CP60	75967	73
MHP-CP72	75968	73
MHP-CP84	76811	73
MHP-CP96	78958	73
MHP-EP	76392	47
MHP-EP	76392	61
MHP-EP	76392	73
MHP-EP	76392	126
MHP-EP	76392	130
MHP-EP	76392	134
MHP-EP-S/S	77599	48
MHP-EPHD-54	91347	54
MHP-EPHD-54	91347	68
MHPBPK	77728	61
MHPBPK	77728	68
MHPMPK	77727	61
MHPMPK	77727	68
MHPMPK	77727	73
MHS-120-2ESAC	77852	131
MHS-120V-2ESAC	77865	131
MHS-18RMV	79624	115
MHS-18RUV	79748	113
MHS-18RV	76646	116
MHS-18V	76169	114
MHS-18V-MST	79442	115
MHS-24	75910	114
MHS-24-ESAC	77840	131
MHS-24-S/S	77601	118
MHS-24P	78736	116
MHS-24R	76613	116
MHS-24R-S/S	77640	118
MHS-24RMV	79625	115
MHS-24RU	79738	113
MHS-24RUV	79749	113
MHS-24RV	76647	116
MHS-24RV-S/S	77649	118
MHS-24V	76170	114
MHS-24V-ESAC	77853	131
MHS-24V-MST	79443	115
MHS-24V-S/S	77610	118
MHS-30	75911	114
MHS-30-ESAC	77841	131
MHS-30-S/S	77602	118
MHS-30P	78737	116
MHS-30R	76614	116
MHS-30R-S/S	77641	118
MHS-30RMV	79626	115
MHS-30RU	79739	113
MHS-30RUV	79750	113
MHS-30RV	76648	116
MHS-30RV-S/S	77650	118
MHS-30V	76171	114
MHS-30V-ESAC	77854	131
MHS-30V-MST	79444	115
MHS-30V-S/S	77611	118
MHS-36	75912	114
MHS-36-ESAC	77842	131
MHS-36-S/S	77603	118
MHS-36P	78738	116
MHS-36R	76615	116
MHS-36R-S/S	77642	118
MHS-36RMV	79627	115
MHS-36RU	79740	113
MHS-36RUV	79751	113
MHS-36RV	76649	116
MHS-36RV-S/S	77651	118
MHS-36V	76172	114
MHS-36V-ESAC	77855	131
MHS-36V-MST	79445	115
MHS-36V-S/S	77612	118
MHS-42	75913	114
MHS-42-ESAC	77843	131
MHS-42-S/S	77604	118
MHS-42P	78739	116
MHS-42R	76616	116
MHS-42R-S/S	77643	118
MHS-42RMV	79628	115
MHS-42RU	79741	113
MHS-42RUV	79752	113
MHS-42RV	76650	116
MHS-42RV-S/S	77652	118
MHS-42V	76173	114
MHS-42V-ESAC	77856	131
MHS-42V-MST	79446	115
MHS-42V-S/S	77613	118
MHS-48	75914	114
MHS-48-ESAC	77844	131
MHS-48-S/S	77605	118
MHS-48P	78740	116
MHS-48R	76617	116
MHS-48R-S/S	77644	118
MHS-48RMV	79629	115
MHS-48RU	79742	113
MHS-48RUV	79753	113
MHS-48RV	76651	116
MHS-48RV-S/S	77653	118
MHS-48V	76174	114
MHS-48V-ESAC	77857	131
MHS-48V-MST	79447	115
MHS-48V-S/S	77614	118
MHS-54	75915	114
MHS-54-ESAC	77845	131
MHS-54-S/S	77606	118
MHS-54P	78741	116
MHS-54R	76618	116
MHS-54R-S/S	77645	118
MHS-54RMV	79630	115
MHS-54RU	79743	113
MHS-54RUV	79754	113
MHS-54RV	76652	116
MHS-54RV-S/S	77654	118
MHS-54V	76175	114
MHS-54V-ESAC	77858	131
MHS-54V-MST	79448	115
MHS-54V-S/S	77615	118
MHS-60	75916	114
MHS-60-2ESAC	77848	131
MHS-60-ESAC	77846	131
MHS-60-S/S	77607	118
MHS-60P**	78742	116
MHS-60R	76619	116
MHS-60R-S/S	77646	118
MHS-60RMV	79631	115
MHS-60RU	79744	113
MHS-60RUV	79755	113
MHS-60RV	76653	116
MHS-60RV-S/S	77655	118
MHS-60V	76176	114
MHS-60V-2ESAC	77861	131
MHS-60V-ESAC	77859	131
MHS-60V-MST	79449	115
MHS-60V-S/S	77616	118
MHS-72	75917	114
MHS-72-2ESAC	77849	131
MHS-72-ESAC	77847	131
MHS-72-S/S	77608	118
MHS-72P**	78743	116
MHS-72R	76620	116
MHS-72R-S/S	77647	118
MHS-72RMV	79632	115
MHS-72RU	79745	113
MHS-72RUV	79756	113
MHS-72RV	76654	116
MHS-72RV-S/S	77656	118
MHS-72V	76177	114
MHS-72V-2ESAC	77862	131
MHS-72V-ESAC	77860	131
MHS-72V-MST	79450	115
MHS-72V-S/S	77617	118
MHS-84	76803	114
MHS-84-2ESAC	77850	131
MHS-84-S/S	77609	118
MHS-84P**	78744	116
MHS-84R	76621	116
MHS-84R-S/S	77648	118
MHS-84RU	79746	113
MHS-84RUV	79757	113
MHS-84RV	76805	116
MHS-84RV-S/S	77657	118
MHS-84V	76804	114
MHS-84V-2ESAC	77863	131
MHS-84V-S/S	77618	118
MHS-96	79043	114
MHS-96-2ESAC	77851	131
MHS-96-S/S	79048	118
MHS-96P**	79047	116
MHS-96R	79045	116
MHS-96R-S/S	79050	118
MHS-96RU	79747	113
MHS-96RUV	79758	113
MHS-96RV	79046	116
MHS-96RV-S/S	79051	118
MHS-96V	79044	114
MHS-96V-2ESAC	77864	131
MHS-96V-S/S	79049	118
MHS-CARK-C24/600	77929	132
MHS-CARK-C30/750	77930	132
MHS-CARK-C36/900	77931	132
MHS-CARK-C42/1050	77932	132
MHS-CARK-C48/1200	77933	132
MHS-CARK-C54/1350	77934	132
MHS-CARK-C60/1500	77935	132
MHS-CARK-C72/1800	77936	132
MHS-CARK-V24/600	77937	132
MHS-CARK-V30/750	77938	132
MHS-CARK-V36/900	77939	132
MHS-CARK-V42/1050	77940	132
MHS-CARK-V48/1200	77941	132
MHS-CARK-V54/1350	77942	132
MHS-CARK-V60/1500	77943	132
MHS-CARK-V72/1800	77944	132
MHS-CARK2-C120/3000	77949	132
MHS-CARK2-C60/1500	77945	132
MHS-CARK2-C72/1800	77946	132
MHS-CARK2-C84/2100	77947	132
MHS-CARK2-C96/2400	77948	132
MHS-CARK2-V120/3000	77954	132
MHS-CARK2-V60/1500	77950	132
MHS-CARK2-V72/1800	77951	132
MHS-CARK2-V84/2100	77952	132
MHS-CARK2-V96/2400	77953	132
MHSP-18	76178	111
MHSP-18	76178	112
MHSP-18	76178	120
MHSP-24	75918	111
MHSP-24	75918	112
MHSP-24	75918	120
MHSP-30	75919	111
MHSP-30	75919	112
MHSP-30	75919	120

Index *by Ordering Number*

ORDERING NUMBER	ITEM CODE	PAGE	ORDERING NUMBER	ITEM CODE	PAGE	ORDERING NUMBER	ITEM CODE	PAGE	ORDERING NUMBER	ITEM CODE	PAGE
MHSP-36	75920	111	MIB60WPK	90251	204	MMP-1842	77576	41	MMP-3096P-UG	92051	50
MHSP-36	75920	112	MIB72-2H	79978	202	MMP-1842P	91996	43	MMP-36108-UG	91988	49
MHSP-36	75920	120	MIB72CPK	90260	204	MMP-1848	77577	41	MMP-36108P-UG	92059	50
MHSP-42	75921	111	MIB72CSK	90244	201	MMP-1848-UG	91959	49	MMP-36120-UG	91989	49
MHSP-42	75921	112	MIB72CSK	90244	204	MMP-1848P	91997	43	MMP-36120P-UG	92060	50
MHSP-42	75921	120	MIB72WPK	90252	201	MMP-1848P-UG	92030	50	MMP-3654-UG	91983	49
MHSP-48	75922	111	MIB72WPK	90252	204	MMP-1854	77578	41	MMP-3654P-UG	92054	50
MHSP-48	75922	112	MMBK	75830	34	MMP-1854-UG	91960	49	MMP-3660-UG	91984	49
MHSP-48	75922	120	MMBK	75830	41	MMP-1854P	91998	43	MMP-3660P-UG	92055	50
MHSP-54	75923	111	MMBK	75830	49	MMP-1854P-UG	92031	50	MMP-3672-UG	91985	49
MHSP-54	75923	112	MMBK	75830	50	MMP-1860	77579	41	MMP-3672P-UG	92056	50
MHSP-54	75923	120	MMBK	75830	55	MMP-1860-UG	91961	49	MMP-3684-UG	91986	49
MHSP-60	75924	111	MMBK	75830	62	MMP-1860P	91999	43	MMP-3684P-UG	92057	50
MHSP-60	75924	112	MMBK	75830	63	MMP-1860P-UG	92032	50	MMP-3696-UG	91987	49
MHSP-60	75924	120	MMBK	75830	69	MMP-1872	77580	41	MMP-3696P-UG	92058	50
MHSP-72	75925	111	MMBK	75830	155	MMP-1872-UG	91962	49	MMP-6108	90147	41
MHSP-72	75925	112	MMKU	77324	137	MMP-1872P	92000	43	MMP-6108-UG	91949	49
MHSP-72	75925	120	MMKUHD	77327	137	MMP-1872P-UG	92033	50	MMP-6108P	90389	43
MHSP-84	76814	120	MMP-12108	90149	41	MMP-1884	77581	41	MMP-6108P-UG	92020	50
MHSP-96	79052	120	MMP-12108-UG	91957	49	MMP-1884-UG	91963	49	MMP-6120	90148	41
MHSP24-S/S	77620	122	MMP-12108P	90391	43	MMP-1884P	92001	43	MMP-6120-UG	91950	49
MHSP30-S/S	77621	122	MMP-12108P-UG	92028	50	MMP-1884P-UG	92034	50	MMP-6120P	90390	43
MHSP36-S/S	77622	122	MMP-12120	90150	41	MMP-1896	79040	41	MMP-6120P-UG	92021	50
MHSP42-S/S	77623	122	MMP-12120-UG	91958	49	MMP-1896-UG	91964	49	MMP-624	76450	41
MHSP48-S/S	77624	122	MMP-12120P	90392	43	MMP-1896P	92002	43	MMP-624-S/S	77424	42
MHSP54-S/S	77625	122	MMP-12120P-UG	92029	50	MMP-1896P-UG	92035	50	MMP-624P	78706	43
MHSP60-S/S	77626	122	MMP-1230	76551	41	MMP-24108	91935	41	MMP-630	76451	41
MHSP72-S/S	77627	122	MMP-1230-S/S	77433	42	MMP-24108-UG	91973	49	MMP-630-S/S	77425	42
MHSP84-S/S	77628	122	MMP-1230P	78715	43	MMP-24108P	92012	43	MMP-630P	78707	43
MHSP96-S/S	79053	122	MMP-1236	76552	41	MMP-24108P-UG	92044	50	MMP-636	76452	41
MIB2-1U	79379	201	MMP-1236-S/S	77434	42	MMP-24120	91936	41	MMP-636-S/S	77426	42
MIB2-1U	79379	204	MMP-1236P	78716	43	MMP-24120-UG	91974	49	MMP-636P	78708	43
MIB2-1UF	79908	201	MMP-1242	76553	41	MMP-24120P	92013	43	MMP-642	76453	41
MIB2-1UF	79908	204	MMP-1242-S/S	77435	42	MMP-24120P-UG	92045	50	MMP-642-S/S	77427	42
MIB24-2H	79971	202	MMP-1242P	78717	43	MMP-2442	91928	41	MMP-642P	78709	43
MIB24CPK	90253	204	MMP-1248	76554	41	MMP-2442P	92005	43	MMP-648	76454	41
MIB24CSK	90237	201	MMP-1248-S/S	77436	42	MMP-2448	91929	41	MMP-648-S/S	77428	42
MIB24CSK	90237	204	MMP-1248-UG	91951	49	MMP-2448-UG	91967	49	MMP-648-UG	91943	49
MIB24WPK	90245	201	MMP-1248P	78718	43	MMP-2448P	92006	43	MMP-648P	78710	43
MIB24WPK	90245	204	MMP-1248P-UG	92022	50	MMP-2448P-UG	92038	50	MMP-648P-UG	92014	50
MIB30-2H	79972	202	MMP-1254	76555	41	MMP-2454	91930	41	MMP-654	76455	41
MIB30CPK	90254	204	MMP-1254-S/S	77437	42	MMP-2454-UG	91968	49	MMP-654-S/S	77429	42
MIB30CSK	90238	201	MMP-1254-UG	91952	49	MMP-2454P	92007	43	MMP-654-UG	91944	49
MIB30CSK	90238	204	MMP-1254P	78719	43	MMP-2454P-UG	92039	50	MMP-654P	78711	43
MIB30WPK	90246	201	MMP-1254P-UG	92023	50	MMP-2460	91931	41	MMP-654P-UG	92015	50
MIB30WPK	90246	204	MMP-1260	76556	41	MMP-2460-UG	91969	49	MMP-660	76456	41
MIB36-2H	79973	202	MMP-1260-S/S	77438	42	MMP-2460P	92008	43	MMP-660-S/S	77430	42
MIB36CPK	90255	204	MMP-1260-UG	91953	49	MMP-2460P-UG	92040	50	MMP-660-UG	91945	49
MIB36CSK	90239	201	MMP-1260P	78720	43	MMP-2472	91932	41	MMP-660P	78712	43
MIB36CSK	90239	204	MMP-1260P-UG	92024	50	MMP-2472-UG	91970	49	MMP-660P-UG	92016	50
MIB36WPK	90247	201	MMP-1272	76557	41	MMP-2472P	92009	43	MMP-672	76457	41
MIB36WPK	90247	204	MMP-1272-S/S	77439	42	MMP-2472P-UG	92041	50	MMP-672-S/S	77431	42
MIB42-2H	79974	202	MMP-1272-UG	91954	49	MMP-2484	91933	41	MMP-672-UG	91946	49
MIB42CPK	90256	204	MMP-1272P	78721	43	MMP-2484-UG	91971	49	MMP-672P	78713	43
MIB42CSK	90240	201	MMP-1272P-UG	92025	50	MMP-2484P	92010	43	MMP-672P-UG	92017	50
MIB42CSK	90240	204	MMP-1284	76799	41	MMP-2484P-UG	92042	50	MMP-684	76798	41
MIB42WPK	90248	201	MMP-1284-S/S	77440	42	MMP-2496	91934	41	MMP-684-S/S	77432	42
MIB42WPK	90248	204	MMP-1284-UG	91955	49	MMP-2496-UG	91972	49	MMP-684-UG	91947	49
MIB48-2H	79975	202	MMP-1284P	78722	43	MMP-2496P	92011	43	MMP-684P	78714	43
MIB48CPK	90257	204	MMP-1284P-UG	92026	50	MMP-2496P-UG	92043	50	MMP-684P-UG	92018	50
MIB48CSK	90241	201	MMP-1296	79034	41	MMP-30108-UG	91981	49	MMP-696	79033	41
MIB48CSK	90241	204	MMP-1296-S/S	79036	42	MMP-30108P-UG	92052	50	MMP-696-S/S	79035	42
MIB48WPK	90249	201	MMP-1296-UG	91956	49	MMP-30120-UG	91982	49	MMP-696-UG	91948	49
MIB48WPK	90249	204	MMP-1296P	79038	43	MMP-30120P-UG	92053	50	MMP-696P	79037	43
MIB54-2H	79976	202	MMP-1296P-UG	92027	50	MMP-3048-UG	91975	49	MMP-696P-UG	92019	50
MIB54CPK	90258	204	MMP-18108	91926	41	MMP-3048P-UG	92046	50	MMPBPK	76466	47
MIB54CSK	90242	201	MMP-18108-UG	91965	49	MMP-3054-UG	91976	49	MMPBPK	76466	54
MIB54CSK	90242	204	MMP-18108P	92003	43	MMP-3054P-UG	92047	50	MMPBPK	76466	172
MIB54WPK	90250	201	MMP-18108P-UG	92036	50	MMP-3060-UG	91977	49	MMPBPK-S/S	77600	48
MIB54WPK	90250	204	MMP-18120	91927	41	MMP-3060P-UG	92048	50	MMPCP108	90326	47
MIB60-2H	79977	202	MMP-18120-UG	91966	49	MMP-3072-UG	91978	49	MMPCP108	90326	61
MIB60CPK	90259	204	MMP-18120P	92004	43	MMP-3072P-UG	92049	50	MMPCP108UG	91924	54
MIB60CSK	90243	201	MMP-18120P-UG	92037	50	MMP-3084-UG	91979	49	MMPCP108UG	91924	68
MIB60CSK	90243	204	MMP-1836	77575	41	MMP-3084P-UG	92050	50	MMPCP120	90327	47
MIB60WPK	90251	201	MMP-1836P	91995	43	MMP-3096-UG	91980	49	MMPCP120	90327	61

Index *by Ordering Number*

ORDERING NUMBER	ITEM CODE	PAGE
MMPCP120UG	91925	54
MMPCP120UG	91925	68
MMPCP24	76458	47
MMPCP24	76458	61
MMPCP24-S/S	77590	48
MMPCP30	76459	47
MMPCP30	76459	61
MMPCP30-S/S	77591	48
MMPCP36	76460	47
MMPCP36	76460	61
MMPCP36-S/S	77592	48
MMPCP42	76461	47
MMPCP42	76461	61
MMPCP42-S/S	77593	48
MMPCP48	76462	47
MMPCP48	76462	61
MMPCP48-S/S	77594	48
MMPCP48UG	91918	54
MMPCP48UG	91918	68
MMPCP54	76463	47
MMPCP54	76463	61
MMPCP54-S/S	77595	48
MMPCP54UG	91919	54
MMPCP54UG	91919	68
MMPCP60	76464	47
MMPCP60	76464	61
MMPCP60-S/S	77596	48
MMPCP60UG	91920	54
MMPCP60UG	91920	68
MMPCP72	76465	47
MMPCP72	76465	61
MMPCP72-S/S	77597	48
MMPCP72UG	91921	54
MMPCP72UG	91921	68
MMPCP84	76808	47
MMPCP84	76808	61
MMPCP84-S/S	77598	48
MMPCP84UG	91922	54
MMPCP84UG	91922	68
MMPCP96	77722	47
MMPCP96	77722	61
MMPCP96-S/S	78686	48
MMPCP96UG	91923	54
MMPCP96UG	91923	68
MMPK	76537	34
MMPK	76537	41
MMPK	76537	49
MMPK	76537	50
MMPK	76537	55
MMPK	76537	62
MMPK	76537	63
MMPK	76537	69
MMPK	76537	155
MORK	74921	231
MORK	74921	232
MORKSD	74922	231
MORKSD	74922	232
MRB102	77545	58
MRB102	77545	65
MRB108	77546	58
MRB108	77546	65
MRB114	77547	58
MRB114	77547	65
MRB18	77531	58
MRB18	77531	65
MRB24	77532	58
MRB24	77532	65
MRB30	77533	58
MRB30	77533	65
MRB36	77534	58
MRB36	77534	65
MRB42	77535	58
MRB42	77535	65
MRB48	77536	58
MRB48	77536	65

ORDERING NUMBER	ITEM CODE	PAGE
MRB54	77537	58
MRB54	77537	65
MRB60	77538	58
MRB60	77538	65
MRB66	77539	58
MRB66	77539	65
MRB72	77540	58
MRB72	77540	65
MRB78	77541	58
MRB78	77541	65
MRB84	77542	58
MRB84	77542	65
MRB90	77543	58
MRB90	77543	65
MRB96	77544	58
MRB96	77544	65
MSB24-2I	79979	199
MSB24RMK	79991	199
MSB30-2I	79980	199
MSB30RMK	79992	199
MSB36-2I	79981	199
MSB36RMK	79993	199
MSB42-2I	79982	199
MSB42RMK	79994	199
MSB48-2I	79983	199
MSB48RMK	79995	199
MSB54-2I	79984	199
MSB54RMK	79996	199
MSB60-2I	79985	199
MSB60RMK	79997	199
MSB72-2I	79986	199
MSB72RMK	79998	199
MSBRMK	79987	201
MSP-224	75787	34
MSP-224-S/S	77453	36
MSP-230	75788	34
MSP-230-S/S	77454	36
MSP-236	75789	34
MSP-236-S/S	77455	36
MSP-242	75790	34
MSP-242-S/S	77456	36
MSP-248	75791	34
MSP-248-S/S	77457	36
MSP-254	75792	34
MSP-254-S/S	77458	36
MSP-260	75793	34
MSP-260-S/S	77459	36
MSP-272	75794	34
MSP-272-S/S	77460	36
MSP-284	76796	34
MSP-284-S/S	77461	36
MSP-824	75795	34
MSP-824-S/S	77462	36
MSP-830	75796	34
MSP-830-S/S	77463	36
MSP-836	75797	34
MSP-836-S/S	77464	36
MSP-842	75798	34
MSP-842-S/S	77465	36
MSP-848	75799	34
MSP-848-S/S	77466	36
MSP-854	75800	34
MSP-854-S/S	77467	36
MSP-860	75801	34
MSP-860-S/S	77468	36
MSP-872	75802	34
MSP-872-S/S	77470	36
MSP-884	76797	34
MSP-884-S/S	77471	36
MSP-UHT1442	91280	35
MSP-UHT1448	91281	35
MSP-UHT1454	91282	35
MSP-UHT1460	91283	35
MSP-UHT1472	91284	35
MSP-UHT224	91264	35

ORDERING NUMBER	ITEM CODE	PAGE
MSP-UHT230	91265	35
MSP-UHT236	91266	35
MSP-UHT242	91267	35
MSP-UHT248	91268	35
MSP-UHT254	91269	35
MSP-UHT260	91270	35
MSP-UHT272	91271	35
MSP-UHT824	91272	35
MSP-UHT830	91273	35
MSP-UHT836	91274	35
MSP-UHT842	91275	35
MSP-UHT848	91276	35
MSP-UHT854	91277	35
MSP-UHT860	91278	35
MSP-UHT872	91279	35
MSPBPK	75831	39
MSPBPK	75831	141
MSPBPK-S/S	77583	24
MSPBPK-S/S	77583	40
MSPMPK	75811	39
MSPMPK	75811	47
MSPMPK	75811	54
MSPMPK	75811	80
MSPMPK	75811	87
MSPMPK-S/S	77582	40
MSPMPK-S/S	77582	48
MSPP24	75803	39
MSPP24-S/S	77472	40
MSPP30	75804	39
MSPP30	75804	141
MSPP30-S/S	77473	40
MSPP36	75805	39
MSPP36	75805	141
MSPP36-S/S	77474	40
MSPP42	75806	39
MSPP42	75806	141
MSPP42-S/S	77475	40
MSPP48	75807	39
MSPP48	75807	141
MSPP48-S/S	77476	40
MSPP54	75808	39
MSPP54	75808	141
MSPP54-S/S	77477	40
MSPP60	75809	39
MSPP60	75809	141
MSPP60-S/S	77478	40
MSPP66	76695	141
MSPP72	75810	39
MSPP72-S/S	77479	40
MSPP84	76807	39
MSPP84-S/S	77480	40
MSPPL	75816	39
MSPPL	75816	80
MSPPL	75816	87
MSPPL-S/S	77524	40
MSR	74914	231
MSR2	79378	230
MSR2	79378	231
MSR2-S/S	90046	232
MSRSD	74915	231
MSRSD-S/S	90055	232
MST-MBL	79436	111
MST-MBL	79436	121
MST-MBR	79437	111
MST-MBR	79437	121
MSTAM	79435	111
MSTAM	79435	121
MSTBK	79440	111
MSTBK	79440	121
MSTCHD	79439	111
MSTCHD	79439	121
MSTDB	79434	108
MSTDB	79434	111
MSTDB	79434	115
MSTDB	79434	121

ORDERING NUMBER	ITEM CODE	PAGE
MSTDB	79434	155
MSTGT	79441	111
MSTGT	79441	121
MSTHD-B	79433	111
MSTHD-B	79433	121
MSTHD-S	79432	111
MSTHD-S	79432	121
MSTHD-W	79431	111
MSTHD-W	79431	121
MSTPMHD	79451	111
MSTPMHD	79451	121
MXP-12108	90643	74
MXP-12120	90588	74
MXP-1242	90581	74
MXP-1248	90582	74
MXP-1254	90583	74
MXP-1260	90584	74
MXP-1272	90585	74
MXP-1284	90586	74
MXP-1296	90587	74
MXP-6108	90642	74
MXP-6120	90400	74
MXP-642	90393	74
MXP-648	90394	74
MXP-654	90395	74
MXP-660	90396	74
MXP-672	90397	74
MXP-684	90398	74
MXP-696	90399	74
MXPP-12108	90645	77
MXPP-12120	90629	77
MXPP-1242	90622	77
MXPP-1248	90623	77
MXPP-1254	90624	77
MXPP-1260	90625	77
MXPP-1272	90626	77
MXPP-1284	90627	77
MXPP-1296	90628	77
MXPP-6108	90644	77
MXPP-6120	90596	77
MXPP-642	90589	77
MXPP-648	90590	77
MXPP-654	90591	77
MXPP-660	90592	77
MXPP-672	90593	77
MXPP-684	90594	77
MXPP-696	90595	77
MXPPBK	90607	77
MXPPE	90598	77
OIBBK	76950	214
P-CARK-C24/600	78072	124
P-CARK-C30/750	78073	124
P-CARK-C36/900	78074	124
P-CARK-C42/1050	78075	124
P-CARK-C48/1200	78076	124
P-CARK-C54/1350	78077	124
P-CARK-C60/1500	78078	124
P-CARK-C72/1800	78079	124
P-CARK-V24/600	78080	124
P-CARK-V30/750	78081	124
P-CARK-V36/900	78082	124
P-CARK-V42/1050	78083	124
P-CARK-V48/1200	78084	124
P-CARK-V54/1350	78085	124
P-CARK-V60/1500	78086	124
P-CARK-V72/1800	78087	124
P-CARK2-C120/3000	78092	124
P-CARK2-C60/1500	78088	124
P-CARK2-C72/1800	78089	124
P-CARK2-C84/2100	78090	124
P-CARK2-C96/2400	78091	124
P-CARK2-V120/3000	78097	124
P-CARK2-V60/1500	78093	124
P-CARK2-V72/1800	78094	124
P-CARK2-V84/2100	78095	124

Index *by Ordering Number*

ORDERING NUMBER	ITEM CODE	PAGE	ORDERING NUMBER	ITEM CODE	PAGE	ORDERING NUMBER	ITEM CODE	PAGE	ORDERING NUMBER	ITEM CODE	PAGE
P-CARK2-V96/2400	78096	124	PC48-ESAC	77959	123	PST2-S	77724	68	PTM30VR	79670	227
PAB	75513	92	PC54	74572	101	PST2-S	77724	71	PTM30VR-S/S	90024	228
PAB	75513	104	PC54-ESAC	77960	123	PST2-S	77724	73	PTM36R	74900	227
PAB	75513	107	PC60	74573	101	PST2-W	77723	61	PTM36R-S/S	90014	228
PAB	75513	126	PC60-2ESAC	77963	123	PST2-W	77723	68	PTM36T	74886	227
PAB	75513	130	PC60-ESAC	77961	123	PST2-W	77723	71	PTM36T-S/S	90003	228
PAB	75513	148	PC72	74574	101	PST2-W	77723	73	PTM36VR	79671	227
PAB	75513	166	PC72-2ESAC	77964	123	PSTA	75896	39	PTM36VR-S/S	90025	228
PACB100	79656	121	PC72-ESAC	77962	123	PSTA	75896	47	PTM42R	74901	227
PACB100	79656	141	PC84-2ESAC	77965	123	PSTA	75896	54	PTM42R-S/S	90015	228
PACB100	79656	151	PC96-2ESAC	77966	123	PSTA	75896	61	PTM42T	74887	227
PACB60	78683	47	PCAP-24/600	77913	126	PSTA	75896	68	PTM42T-S/S	90004	228
PACB60	78683	54	PCAP-30/750	77914	126	PSTA	75896	73	PTM42VR	79672	227
PACB60	78683	61	PCAP-36/900	77915	126	PSTA	75896	80	PTM42VR-S/S	90026	228
PACB60	78683	68	PCAP-42/1050	77916	126	PSTA	75896	87	PTM48R	74902	227
PACB60	78683	73	PCAP-48/1200	77917	126	PSTA	75896	137	PTM48R-S/S	90016	228
PAK	78705	47	PCAP-54/1350	77918	126	PSTA-S/S	77442	40	PTM48T	74888	227
PAK	78705	54	PCAP-60/1500	77919	126	PSTA-S/S	77442	48	PTM48T-S/S	90005	228
PAK	78705	61	PCAP-72/1800	77920	126	PSTS-R	77726	61	PTM48VR	79673	227
PAK	78705	68	PFC	75927	120	PSTS-R	77726	68	PTM48VR-S/S	90027	228
PAK	78705	71	PFC	75927	134	PSTS-R	77726	73	PTM54R	74903	227
PAK	78705	73	PFC-SS	76560	120	PSTS-S	75899	47	PTM54R-S/S	90017	228
PANK*	78799	44	PFC-SS	76560	122	PSTS-S	75899	54	PTM54T	74889	227
PANK*	78799	51	PFRS	76622	116	PSTS-S	75899	61	PTM54T-S/S	90006	228
PANK*	78799	57	PFRS	76622	120	PSTS-S	75899	68	PTM54VR	79674	227
PANK*	78799	64	PFRS	76622	122	PSTS-S	75899	73	PTM54VR-S/S	90028	228
PANK*	78799	70	PFRS	76622	131	PSTS-S	75899	80	PTM60R	74904	227
PANK*	78799	117	PFS-ESAC	79073	131	PSTS-S	75899	87	PTM60R-S/S	90018	228
PANK*	78799	139	PHA	73626	104	PSTS-W	75898	39	PTM60T	74890	227
PAT1	78684	44	PHA	73626	126	PSTS-W	75898	47	PTM60T-S/S	90007	228
PAT1	78684	51	PLSC18	75588	102	PSTS-W	75898	54	PTM60VR	79675	227
PAT1	78684	57	PLSC24	75589	102	PSTS-W	75898	61	PTM60VR-S/S	90029	228
PAT1	78684	64	PLSC30	75590	102	PSTS-W	75898	68	PTMA36R	90367	226
PAT1	78684	70	PLSC36	75591	102	PSTS-W	75898	73	PTMA36T	90362	226
PAT1	78684	117	PLSC42	75592	102	PSTS-W	75898	80	PTMA36VR	90372	226
PAT1	78684	139	PLSC48	75593	102	PSTS-W	75898	87	PTMA42R	90368	226
PAT2	78685	44	PLSC54	75594	102	PSTS-W	75898	137	PTMA42T	90363	226
PAT2	78685	51	PLSP18	75595	104	PTEZ-18	90265	219	PTMA42VR	90373	226
PAT2	78685	57	PLSP24	75596	104	PTEZ-24	90266	219	PTMA48R	90369	226
PAT2	78685	64	PLSP30	75597	104	PTEZ-30	90267	219	PTMA48T	90364	226
PAT2	78685	70	PLSP36	75598	104	PTEZ-36	90268	219	PTMA48VR	90374	226
PAT2	78685	117	PLSP42	75599	104	PTEZ-42	90269	219	PTMA54R	90370	226
PAT2	78685	139	PLSP48	75600	104	PTEZ-48	90270	219	PTMA54T	90365	226
PATHK	78794	44	PLSP54	75601	104	PTEZDC	90353	219	PTMA54VR	90375	226
PATHK	78794	51	PMSMK	74916	231	PTEZHD-42/1050	90616	219	PTMA60R	90371	226
PATHK	78794	57	PMSMK2	79380	230	PTEZHD-42/1050-UG	90798	219	PTMA60T	90366	226
PATHK	78794	64	PMSMK2	79380	231	PTEZHD-48/1200	90617	219	PTMA60VR	90376	226
PATHK	78794	70	PMSMK2-S/S	90047	232	PTEZHD-48/1200-UG	90799	219	PTMAAK	90194	230
PATHK	78794	117	PMSMKSD	74917	231	PTEZHD-54/1350	90618	219	PTMAAKHD	90195	230
PATHK	78794	139	PMSMKSD-S/S	90056	232	PTEZHD-54/1350-UG	90800	219	PTMAEKHDR	90192	230
PATHK*	78794	44	PP-18	78414	104	PTEZHD-56/1400	90795	219	PTMAEKHDT	90191	230
PATHK*	78794	51	PP-24	78416	104	PTEZHD-60/1500	90619	219	PTMAEKHDVR	90193	230
PATHK*	78794	57	PP-30	78418	104	PTEZHD-60/1500-UG	90801	219	PTMAEKR	90189	230
PATHK*	78794	64	PP-36	78420	104	PTEZHD-64/1600	90796	219	PTMAEKT	90188	230
PATHK*	78794	70	PP-42	78422	104	PTEZHD-72/1800	90620	219	PTMAEKVR	90190	230
PATHK*	78794	117	PP-48	78424	104	PTEZHD-72/1800-UG	90802	219	PTMAFASK	90196	230
PATHK*	78794	139	PP-54	78425	104	PTEZHD-80/2000	90797	219	PTMAFMKHDR	90187	230
PATLK	78791	44	PP-60	78451	104	PTEZHD-84/2100	90621	219	PTMAFMKR	90186	230
PATLK	78791	51	PP72	73017	104	PTEZHD-DCK	90805	219	PTMAFMKT	90185	230
PATLK	78791	57	PPS6	73024	104	PTEZHD-JBBK	90807	219	PTMAHD54R	90381	226
PATLK	78791	64	PSA150	73156	101	PTEZHD-MBK	90803	219	PTMAHD54T	90377	226
PATLK	78791	70	PSA150	73156	104	PTEZHD-PBK	90804	219	PTMAHD54VR	90385	226
PATLK	78791	117	PSA150	73156	123	PTEZHD-WRBK	90806	219	PTMAHD60R	90382	226
PATLK	78791	139	PSA150	73156	126	PTEZMB	90351	219	PTMAHD60T	90378	226
PC120-2ESAC	77967	123	PSSS	74773	104	PTEZPB	90352	219	PTMAHD60VR	90386	226
PC18	74566	101	PSSS	74773	111	PTM24R	75584	227	PTMAHD72R	90383	226
PC24	74567	101	PSSS	74773	112	PTM24R-S/S	90012	228	PTMAHD72T	90379	226
PC24-ESAC	77955	123	PSSS	74773	116	PTM24T	75583	227	PTMAHD72VR	90387	226
PC30	74568	101	PSSS	74773	120	PTM24T-S/S	90001	228	PTMAHD84R	90384	226
PC30-ESAC	77956	123	PSSS	74773	122	PTM24VR	79669	227	PTMAHD84T	90380	226
PC36	74569	101	PST2-R	77725	61	PTM24VR-S/S	90023	228	PTMAHD84VR	90388	226
PC36-ESAC	77957	123	PST2-R	77725	68	PTM30R	74899	227	PTMAORK	90197	230
PC42	74570	101	PST2-R	77725	71	PTM30R-S/S	90013	228	PTMHD54R	74905	227
PC42-ESAC	77958	123	PST2-R	77725	73	PTM30T	74885	227	PTMHD54R-S/S	90019	228
PC48	74571	101	PST2-S	77724	61	PTM30T-S/S	90002	228	PTMHD54T	74891	227

Index *by Ordering Number*

ORDERING NUMBER	ITEM CODE	PAGE
PTMHD54T-S/S	90008	228
PTMHD54VR	79665	227
PTMHD54VR-S/S	90030	228
PTMHD60R	74906	227
PTMHD60R-S/S	90020	228
PTMHD60T	74892	227
PTMHD60T-S/S	90009	228
PTMHD60VR	79666	227
PTMHD60VR-S/S	90031	228
PTMHD72R	74907	227
PTMHD72R-S/S	90021	228
PTMHD72T	74893	227
PTMHD72T-S/S	90010	228
PTMHD72VR	79667	227
PTMHD72VR-S/S	90032	228
PTMHD84R	74908	227
PTMHD84R-S/S	90022	228
PTMHD84T	74894	227
PTMHD84T-S/S	90011	228
PTMHD84VR	79668	227
PTMHD84VR-S/S	90033	228
PTMSD120R	74912	227
PTMSD120R-S/S	90041	228
PTMSD120T	74898	227
PTMSD120T-S/S	90037	228
PTMSD120VR	90054	227
PTMSD120VR-S/S	90045	228
PTMSD72R	74909	227
PTMSD72R-S/S	90038	228
PTMSD72T	74895	227
PTMSD72T-S/S	90034	228
PTMSD72VR	90051	227
PTMSD72VR-S/S	90042	228
PTMSD84R	74910	227
PTMSD84R-S/S	90039	228
PTMSD84T	74896	227
PTMSD84T-S/S	90035	228
PTMSD84VR	90052	227
PTMSD84VR-S/S	90043	228
PTMSD96R	74911	227
PTMSD96R-S/S	90040	228
PTMSD96T	74897	227
PTMSD96T-S/S	90036	228
PTMSD96VR	90053	227
PTMSD96VR-S/S	90044	228
PTPK	75897	61
PTPK	75897	68
PTPK	75897	73
PTS-18R	77664	223
PTS-24R	77665	223
PTS-30R	77666	223
PTS-30R-UG	77673	223
PTS-36R	77667	223
PTS-36R-UG	77674	223
PTS-42R	77668	223
PTS-42R-UG	77675	223
PTS-48R	77669	223
PTS-48R-UG	77676	223
PTS-54R	77670	223
PTS-54R-UG	77677	223
PTS-60R	77671	223
PTS-60R-UG	77678	223
PTS-72R	77672	223
PTS-72R-UG	77679	223
PTS-AHDSR	93090	225
PTS-ASR	93089	225
PTS-DRK	90100	225
PTS-EBK	77702	225
PTS-HDSR	77692	225
PTS-HIBK	77697	225
PTS-IBK	77696	225
PTS-LHSAA	77756	225
PTS-MBK	77700	225
PTS-MBKUG	77701	225
PTS-PA	77699	225

ORDERING NUMBER	ITEM CODE	PAGE
PTS-PS	77698	225
PTS-RHSAA	77755	225
PTS-RR21	77680	223
PTS-RR27	77681	223
PTS-RR33	77682	223
PTS-RR39	77683	223
PTS-RR39	77683	223
PTS-RR45	77684	223
PTS-RR45	77684	223
PTS-RR51	77685	223
PTS-RR51	77685	223
PTS-RR57	77686	223
PTS-RR57	77686	223
PTS-RR63	77687	223
PTS-RR63	77687	223
PTS-RR69	77688	223
PTS-RR75	77689	223
PTS-RR81	77690	223
PTS-SAK	77694	225
PTS-SR	77691	225
PTS-WMK	78767	225
PV-18	78453	101
PV-24	78415	101
PV-30	78417	101
PV-36	78419	101
PV-42	78421	101
PV-48	78423	101
PV-54	78454	101
PV-60	78455	101
PV120-2ESAC	77993	123
PV24-ESAC	77981	123
PV30-ESAC	77982	123
PV36-ESAC	77983	123
PV42-ESAC	77984	123
PV48-ESAC	77985	123
PV54-ESAC	77986	123
PV60-2ESAC	77989	123
PV60-ESAC	77987	123
PV72	73438	101
PV72-2ESAC	77990	123
PV72-ESAC	77988	123
PV84-2ESAC	77991	123
PV96-2ESAC	77992	123
QB1PCK	90954	171
QMT-A-P	91285	39
QMT-A-W	91286	39
QMT-ATEX	90435	39
QMT-G	76483	39
QMT-G	76483	47
QMT-G	76483	54
QMT-G-S/S	77586	40
QMT-G-S/S	77586	48
QMT-P	76074	39
QMT-P	76074	47
QMT-P	76074	54
QMT-P	76074	80
QMT-P	76074	87
QMT-P-S/S	77584	40
QMT-P-S/S	77584	48
QMT-S	79039	47
QMT-S	79039	54
QMT-S	79039	80
QMT-S	79039	87
QMT-S-S/S	79059	48
QMT-W	76075	39
QMT-W	76075	47
QMT-W	76075	54
QMT-W	76075	80
QMT-W	76075	87
QMT-W-S/S	77585	40
QMT-W-S/S	77585	48
QMTBK-G	76540	39
QMTBK-G	76540	40
QMTBK-G	76540	47
QMTBK-G	76540	48

ORDERING NUMBER	ITEM CODE	PAGE
QMTBK-G	76540	54
QMTBK-P	76097	39
QMTBK-P	76097	40
QMTBK-P	76097	47
QMTBK-P	76097	48
QMTBK-P	76097	54
QMTBK-P	76097	80
QMTBK-P	76097	87
QMTBK-W	76098	39
QMTBK-W	76098	40
QMTBK-W	76098	47
QMTBK-W	76098	48
QMTBK-W	76098	54
QMTBK-W	76098	61
QMTBK-W	76098	68
QMTBK-W	76098	73
QMTBK-W	76098	80
QMTBK-W	76098	87
QMTBK-W	76098	137
QMTPAK	76096	39
QMTPAK	76096	47
QMTPAK	76096	54
QMTPAK	76096	80
QMTPAK	76096	87
QMTPAK	76096	137
QMTPAK-S/S	77587	40
QMTPAK-S/S	77587	48
QMTPSBK	76099	39
QMTPSBK	76099	47
QMTPSBK	76099	54
QMTPSBK	76099	80
QMTPSBK	76099	87
QMTPSBK	76099	137
QMTPSBK-S/S	77588	40
QMTPSBK-S/S	77588	48
QMTS-G	76484	39
QMTS-G	76484	47
QMTS-G	76484	54
QMTS-G-S/S	77452	24
QMTS-G-S/S	77452	40
QMTS-G-S/S	77452	48
QMTS-P	75845	19
QMTS-P	75845	39
QMTS-P	75845	47
QMTS-P	75845	54
QMTS-P	75845	80
QMTS-P	75845	87
QMTS-P	75845	137
QMTS-P-S/S	77450	24
QMTS-P-S/S	77450	40
QMTS-P-S/S	77450	48
QMTS-S-S/S	79056	48
QMTS-W-S/S	77451	24
QMTS-W-S/S	77451	40
QMTS-W-S/S	77451	48
R-CARK-C24/600	78098	128
R-CARK-C30/750	78099	128
R-CARK-C36/900	78100	128
R-CARK-C42/1050	78101	128
R-CARK-C48/1200	78102	128
R-CARK-C54/1350	78103	128
R-CARK-C60/1500	78104	128
R-CARK-C72/1800	78105	128
R-CARK-V24/600	78106	128
R-CARK-V30/750	78107	128
R-CARK-V36/900	78108	128
R-CARK-V42/1050	78109	128
R-CARK-V48/1200	78110	128
R-CARK-V54/1350	78111	128
R-CARK-V60/1500	78112	128
R-CARK-V72/1800	78113	128
R-CARK2-C120/3000	78118	128
R-CARK2-C60/1500	78114	128
R-CARK2-C72/1800	78115	128
R-CARK2-C84/2100	78116	128

ORDERING NUMBER	ITEM CODE	PAGE
R-CARK2-C96/2400	78117	128
R-CARK2-V120/3000	78123	128
R-CARK2-V60/1500	78119	128
R-CARK2-V72/1800	78120	128
R-CARK2-V84/2100	78121	128
R-CARK2-V96/2400	78122	128
RAPEK	77423	155
RB38BP	79481	170
RB38BP	79481	176
RB38BP	79481	177
RB6DH	76571	179
RB6SA	76570	178
RBAER-10	76041	177
RBAER-16	76042	177
RBAER-22	76043	177
RBAER-28	76044	177
RBAER-34	76045	177
RBAER-40	76046	177
RBAER-44	76655	177
RBAER-46	76047	177
RBAER-52	76048	177
RBAER-58	76049	177
RBAER-70	76050	177
RBAGM-16	77106	29
RBAGM-16	77106	173
RBAGM-22	77107	29
RBAGM-22	77107	173
RBAGM-28	77108	29
RBAGM-28	77108	173
RBAGM-34	77109	29
RBAGM-34	77109	173
RBAGM-40	77110	29
RBAGM-40	77110	173
RBAGM-46	77111	29
RBAGM-46	77111	173
RBAGS-16	75995	173
RBAGS-18	76967	173
RBAGS-22	75996	173
RBAGS-24	76968	173
RBAGS-28	75997	173
RBAGS-30	76969	173
RBAGS-34	75998	173
RBAGS-36	76970	173
RBAGS-40	75999	173
RBAGS-42	76971	173
RBAGS-46	76028	173
RBAGS-48	76972	173
RBAGS-52	76029	173
RBAGS-54	76973	173
RBAGS-58	76030	173
RBAGS-60	76974	173
RBAGS-70	76031	173
RBAGS-72	76975	173
RBAGS-84	76976	173
RBAGSCM-16	76572	174
RBAGSCM-22	76573	174
RBAGSCM-28	76574	174
RBAGSCM-34	76575	174
RBAGSCM-40	76576	174
RBAGSCM-46	76577	174
RBAGSCM-52	76578	174
RBAGSCM-58	76579	174
RBAGSCM-70	76581	174
RBAS4-18	76032	176
RBAS4-24	76033	176
RBAS4-30	76034	176
RBAS4-36	76035	176
RBAS4-42	76036	176
RBAS4-48	76037	176
RBAS4-54	76038	176
RBAS4-60	76039	176
RBAS4-72	76040	176
RBDT-6C	90614	180
RBDTXHD-13C	90615	181
RBDTXHD-6.5C	77517	181

Index *by Ordering Number*

ORDERING NUMBER	ITEM CODE	PAGE
RBP1R-L	90648	216
RBP1R-M	90647	216
RBP1R-S	90646	216
RBP1R-XL	90649	216
RBP1S-L	74560	216
RBP1S-M	74559	216
RBP1S-S	74558	216
RBP1S-XL	74561	216
RBPFK-L	75524	218
RBPFK-M	75523	218
RBPFK-S	75522	218
RBPFK-XL	75525	218
RBPIT-L	75529	218
RBPIT-M	75528	218
RBPIT-S	75527	218
RBPIT-XL	75530	218
RBPMBK	75526	218
RBPRET	73163	218
RBPRET	73163	225
RBPRR-L	90652	218
RBPRR-M	90651	218
RBPRR-S	90650	218
RBPRR-XL	90653	218
RBPSR-L	74564	218
RBPSR-M	74563	218
RBPSR-S	74562	218
RBPSR-XL	74565	218
RBQB1-16/400	90935	171
RBQB1-18/450	90936	171
RBQB1-22/550	90937	171
RBQB1-24/600	90938	171
RBQB1-28/700	90939	171
RBQB1-30/750	90940	171
RBQB1-34/850	90941	171
RBQB1-36/900	90942	171
RBQB1-40/1000	90943	171
RBQB1-42/1050	90944	171
RBQB1-46/1150	90945	171
RBQB1-48/1200	90946	171
RBQB1-52/1300	90947	171
RBQB1-54/1350	90948	171
RBQB1-58/1450	90949	171
RBQB1-60/1500	90950	171
RBQB1-64/1600	90951	171
RBQB1-70/1750	90952	171
RBQB1-72/1800	90953	171
RBQC1HD-12	75985	170
RBQC1HD-18	75986	170
RBQC1HD-24	75987	170
RBQC1HD-30	75988	170
RBQC1HD-36	75989	170
RBQC1HD-42	75990	170
RBQC1HD-48	75991	170
RBQC1HD-54	75992	170
RBQC1HD-66	75993	170
RBSE-10	79861	175
RBSE-16	79862	175
RBSE-22	79863	175
RBSE-28	79864	175
RBSE-34	79865	175
RBSE-40	79866	175
RBSE-46	79867	175
RBSE-52	79868	175
RBSE-58	79869	175
RBSE-64	79870	175
RBSE-70	79871	175
RC120-2ESAC	77980	127
RC18	74618	105
RC24	74619	105
RC24-ESAC	77968	127
RC30	74620	105
RC30-ESAC	77969	127
RC36	74621	105
RC36-ESAC	77970	127
RC42	74622	105
RC42-ESAC	77971	127
RC48	74623	105
RC48-ESAC	77972	127
RC54	74624	105
RC54-ESAC	77973	127
RC60	74625	105
RC60-2ESAC	77976	127
RC60-ESAC	77974	127
RC72	74626	105
RC72-2ESAC	77977	127
RC72-ESAC	77975	127
RC84-2ESAC	77978	127
RC96-2ESAC	77979	127
RCAP-24/600	77921	130
RCAP-30/750	77922	130
RCAP-36/900	77923	130
RCAP-42/1050	77924	130
RCAP-48/1200	77925	130
RCAP-54/1350	77926	130
RCAP-60/1500	77927	130
RCAP-72/1800	77928	130
RDP1-L	74694	183
RDP1-M	74693	183
RDP1-S	74692	183
RDP1-XL	74695	183
RDPBK-L	74701	183
RDPBK-L	74701	185
RDPBK-M	74700	183
RDPBK-M	74700	185
RDPBK-S	74699	183
RDPBK-S	74699	185
RDPBK-XL	74702	183
RDPBK-XL	74702	185
RDPF-L	75568	185
RDPF-M	75567	185
RDPF-S	75566	185
RDPF-XL	75569	185
RDPMBK	74698	185
RDPMSK	74705	185
RMC1	75817	240
RMC1-50	75833	240
RMC1-BCP	76414	240
RMC1-BPP	76415	240
RMC1-BPP	76415	243
RMC1-BPP	76415	244
RMC1-CB	75820	240
RMC1-CB	75820	243
RMC1-CB	75820	244
RMC1-CP	75819	240
RMC1-LS	75834	240
RMC1-LSBPP	76538	240
RMC1-LSPP	75836	240
RMC1-PL	75821	240
RMC1-PP	75832	240
RMC1LS-PL	75835	240
RMC2-FS-1	76558	244
RMC2-FS-50	77330	244
RMC2-FSAPK	76559	244
RP-18	78426	107
RP-24	78427	107
RP-30	78428	107
RP-36	78429	107
RP-42	78430	107
RP-48	78431	107
RP-54	78432	107
RP-60	78433	107
RP-72	74612	107
RRTD6-24	79874	189
RRTD6-30	79875	189
RRTD6-36	79876	189
RRTD6-42	79877	189
RRTD6-48	79878	189
RRTD6-54	79879	189
RRTD6-60	79880	189
RRTD6-72	79881	189
RRTID6-24	79883	192
RRTID6-24	79883	201
RRTID6-30	79884	192
RRTID6-30	79884	201
RRTID6-36	79885	192
RRTID6-36	79885	201
RRTID6-42	79886	192
RRTID6-42	79886	201
RRTID6-48	79887	192
RRTID6-48	79887	201
RRTID6-54	79888	192
RRTID6-54	79888	201
RRTID6-60	79889	192
RRTID6-60	79889	201
RRTID6-72	79890	192
RRTID6-72	79890	201
RS-24	91725	234
RS-30	91726	234
RS-36	91727	234
RS-42	91728	234
RS-48	91729	234
RS-54	91730	234
RS-60	91731	234
RS-66	91732	234
RS-72	91733	234
RS-84	91734	234
RS-96	91735	234
RSA	76249	107
RSA	76249	130
RSA150	73628	105
RSA150	73628	107
RSA150	73628	108
RSA150	73628	111
RSA150	73628	112
RSA150	73628	113
RSA150	73628	114
RSA150	73628	115
RSA150	73628	116
RSA150	73628	120
RSA150	73628	122
RSA150	73628	127
RSA150	73628	130
RSA150	73628	131
RSA150	73628	134
RSA150	73628	109
RSRR-24	92170	237
RSRR-30	92171	237
RSRR-36	92172	237
RSRR-42	92173	237
RSRR-48	92174	237
RSRR-54	92175	237
RSRR-60	92176	237
RSRR-66	92177	237
RSRR-72	92178	237
RSRR-84	92179	237
RSRR-96	92180	237
RV-18	78402	105
RV-24	78403	105
RV-30	78404	105
RV-36	78405	105
RV-42	78406	105
RV-48	78407	105
RV-54	78408	105
RV-60	78409	105
RV-72	74641	105
RV120-2ESAC	78006	127
RV24-ESAC	77994	127
RV30-ESAC	77995	127
RV36-ESAC	77996	127
RV42-ESAC	77997	127
RV48-ESAC	77998	127
RV54-ESAC	77999	127
RV60-2ESAC	78002	127
RV60-ESAC	78000	127
RV72-2ESAC	78003	127
RV72-ESAC	78001	127
RV84-2ESAC	78004	127
RV96-2ESAC	78005	127
RVT6-S/S	76205	122
RWPBLD-18	90087	153
RWPBLD-24	90088	153
RWPBLD-30	90089	153
RWPBLD-36	90090	153
RWPBLD-42	90091	153
RWPBLD-48	90092	153
RWPBLD-54	90093	153
RWPBLD-60	90094	153
RWPBLD-66	90095	153
RWPBLD-72	90096	153
RWPBLD-78	90097	153
RWPBLD-84	90098	153
RWPBLD-90	90099	153
RWPREC-1230	90078	152
RWPREC-1236	90079	152
RWPREC-1242	90080	152
RWPREC-1248	90081	152
RWPREC-1254	90082	152
RWPREC-1260	90083	152
RWPREC-1272	90084	152
RWPREC-1284	90085	152
RWPREC-1296	90086	152
RWPREC-1836	91214	152
RWPREC-1842	91215	152
RWPREC-1848	91216	152
RWPREC-1854	91217	152
RWPREC-1860	91218	152
RWPREC-1872	91219	152
RWPREC-1884	91220	152
RWPREC-1896	91221	152
RWPREC-624	90068	152
RWPREC-630	90069	152
RWPREC-636	90070	152
RWPREC-642	90071	152
RWPREC-648	90072	152
RWPREC-654	90073	152
RWPREC-660	90074	152
RWPREC-672	90075	152
RWPREC-684	90076	152
RWPREC-696	90077	152
RWSECS-18F	91417	154
RWSECS-24F	91418	154
RWSECS-30F	91419	154
RWSECS-36F	91420	154
RWSECS-42F	91421	154
RWSECS-48F	91422	154
RWSECS-54F	91423	154
RWSECS-60F	91424	154
RWSECS-72F	91425	154
RWSECS-84F	91426	154
RWSECS-96F	91427	154
SAC2-TIP-TL	77866	126
SAC2-TIP-TL	77866	130
SAC2-TIP-TL	77866	134
SACHP2	77768	126
SACHP2	77768	130
SACHP2	77768	134
SACKRP	77885	126
SACKRP	77885	130
SACKRP	77885	134
SACPL-24/600	77887	126
SACPL-24/600	77887	130
SACPL-24/600	77887	134
SACPL-30/750	77888	126
SACPL-30/750	77888	130
SACPL-30/750	77888	134
SACPL-36/900	77889	126
SACPL-36/900	77889	130
SACPL-36/900	77889	134
SACPL-42/1050	77890	126
SACPL-42/1050	77890	130

Index *by Ordering Number*

ORDERING NUMBER	ITEM CODE	PAGE	ORDERING NUMBER	ITEM CODE	PAGE	ORDERING NUMBER	ITEM CODE	PAGE	ORDERING NUMBER	ITEM CODE	PAGE
SACPL-42/1050	77890	134	SB5	78790	189	SKPU-4X5/8X50	91295	238	SSRB	75978	73
SACPL-48/1200	77891	126	SB5	78790	192	SKPU-6X1/2X25	90283	238	SST-BUK	76943	120
SACPL-48/1200	77891	130	SB5	78790	195	SKPU-6X1/2X50	91222	238	SST-BUK	76943	141
SACPL-48/1200	77891	134	SB5	78790	198	SKPU-6X1X25	91300	238	SST-BUK-S/S	77636	122
SACPL-54/1350	77892	126	SB5	78790	206	SKPU-6X1X50	91303	238	SST2HD-B	77881	120
SACPL-54/1350	77892	130	SB5	78790	208	SKPU-6X3/4X25	90284	238	SST2HD-B	77881	141
SACPL-54/1350	77892	134	SB5	78790	210	SKPU-6X3/4X50	91223	238	SST2HD-B-S/S	77639	122
SACPL-60/1500	77893	126	SB5	78790	212	SKPU-6X3/8X25	91298	238	SST2HD-G	79041	120
SACPL-60/1500	77893	130	SE6-R36	90220	230	SKPU-6X3/8X50	91301	238	SST2HD-G	79041	141
SACPL-60/1500	77893	134	SE6-R42	90221	230	SKPU-6X5/8X25	91299	238	SST2HD-G-S/S	79042	122
SACPL-72/1800	77894	126	SE6-R48	90222	230	SKPU-6X5/8X50	91302	238	SST2HD-S	77880	120
SACPL-72/1800	77894	130	SE6-R54	90223	230	SKPU-8X1/2X25	90285	238	SST2HD-S	77880	141
SACPL-72/1800	77894	134	SE6-R60	90224	230	SKPU-8X1/2X50	91224	238	SST2HD-S-S/S	77638	122
SACPL2-120/3000	77899	126	SE6-R72	90225	230	SKPU-8X1X25	91306	238	SST2HD-W	77879	120
SACPL2-120/3000	77899	130	SE6-R84	90226	230	SKPU-8X1X50	91309	238	SST2HD-W	77879	141
SACPL2-120/3000	77899	134	SE6-T36	90227	230	SKPU-8X3/4X25	90286	238	SST2HD-W-S/S	77637	122
SACPL2-60/1500	77895	126	SE6-T42	90228	230	SKPU-8X3/4X50	91225	238	SSTBK-B	76637	112
SACPL2-60/1500	77895	130	SE6-T48	90229	230	SKPU-8X3/8X25	91304	238	SSTBK-B	76637	120
SACPL2-60/1500	77895	134	SE6-T54/VR36	90230	230	SKPU-8X3/8X50	91307	238	SSTBK-B	76637	122
SACPL2-72/1800	77896	126	SE6-T60/VR42	90231	230	SKPU-8X5/8X25	91305	238	SSTBK-B	76637	141
SACPL2-72/1800	77896	130	SE6-T72/VR48	90232	230	SKPU-8X5/8X50	91308	238	SSTBK-B	76637	151
SACPL2-72/1800	77896	134	SE6-T84	90233	230	SKPU-DUAL-6X1/2X25	91400	239	SSTBK-W	76636	112
SACPL2-84/2100	77897	126	SE6-VR54	90234	230	SKPU-DUAL-6X1/2X50	91404	239	SSTBK-W	76636	120
SACPL2-84/2100	77897	130	SE6-VR60	90235	230	SKPU-DUAL-6X3/4X25	91401	239	SSTBK-W	76636	122
SACPL2-84/2100	77897	134	SE6-VR72	90236	230	SKPU-DUAL-6X3/4X50	91405	239	SSTBK-W	76636	141
SACPL2-96/2400	77898	126	SE6-VR84	90319	230	SKPU-DUAL-8X1/2X25	91402	239	SSTBK-W	76636	151
SACPL2-96/2400	77898	130	SHIM-KITH	77550	210	SKPU-DUAL-8X1/2X50	91406	239	SSTHB	79582	112
SACPL2-96/2400	77898	134	SHIM-KITL	77548	189	SKPU-DUAL-8X3/4X25	91403	239	SSTHB	79582	120
SACRH	77883	126	SHIM-KITL	77548	192	SKPU-DUAL-8X3/4X50	91407	239	SSTHB	79582	141
SACRH	77883	130	SHIM-KITL	77548	195	SL-48	91841	237	SSTHB	79582	151
SACRH	77883	134	SHIM-KITL	77548	206	SL-48	91841	243	SSTHB-S/S	79586	122
SACRHL	77884	126	SHIM-KITM	77549	198	SLAWK-48	93115	242	SSTHDMK	77870	120
SACRHL	77884	130	SHIM-KITM	77549	208	SLU-48	93113	243	SSTHDMK	77870	141
SACRHL	77884	134	SHIM-KITMOD	79989	201	SLUWK-48	93116	242	SSTHDPM	77868	112
SACRKN	77882	126	SHIM-KITMOD	79989	204	SP-24	91747	234	SSTHDPM	77868	120
SACRKN	77882	130	SKC-24	91751	237	SP-48	91748	234	SSTHDPM	77868	141
SACRKN	77882	134	SKC-30	91752	237	SP-72	91749	234	SSTHDPM	77868	151
SACRKT	77886	126	SKC-36	91753	237	SP-96	91750	234	SSTHK	79070	120
SACRKT	77886	130	SKC-42	91754	237	SPBV	74742	159	SSTHK	79070	134
SACRKT	77886	134	SKC-48	91755	237	SPCP	74734	159	SSTHK	79070	141
SACSK	77052	134	SKC-54	91756	237	SPCP	74734	160	SSTHK-S/S	79071	122
SACSRC	77065	134	SKC-60	91757	237	SPG	74747	159	SSTLBK	79493	112
SAT2AK	78733	120	SKC-66	91758	237	SPG-CVR-A	77387	156	SSTLBK	79493	120
SAT2AK	78733	121	SKC-72	91759	237	SPG-CVR-B	77388	156	SSTLBK	79493	122
SAT2AK	78733	141	SKC-84	91760	237	SPG-CVR-C	77389	156	SSTLBK	79493	141
SAT2AK	78733	151	SKC-96	91761	237	SPG-CVR-D	77390	156	SSTLBK	79493	151
SAT2MK	78704	121	SKPU-10X1/2X25	91311	238	SPG-CVR-E	77391	156	SSTLMB	76072	109
SAT2MK	78704	141	SKPU-10X1/2X50	91316	238	SPG-CVR-F	77392	156	SSTLMB	76072	114
SAT2MK	91415	151	SKPU-10X1X25	91314	238	SPG-CVR-G	77393	156	SSTLMB	76072	138
SAT2NCB	78703	121	SKPU-10X1X50	91319	238	SPG-CVR-H	77741	156	SSTLMB	76072	155
SAT2NCB	78703	141	SKPU-10X3/4X25	91313	238	SPH10	74745	159	SSTOTA	76073	114
SAT2PAT	78735	121	SKPU-10X3/4X50	91318	238	SPK18	74709	159	SSTOTA	76073	138
SAT2PAT	78735	141	SKPU-10X3/8X25	91310	238	SPK24	74710	159	SSTOTA	76073	155
SAT2PM	78732	121	SKPU-10X3/8X50	91315	238	SPK30	74711	159	SSTSMB	76071	109
SAT2PM	78732	141	SKPU-10X5/8X25	91312	238	SPK36	74712	159	SSTSMB	76071	114
SAT2PM	78732	151	SKPU-10X5/8X50	91317	238	SPK42	74713	159	SSTSMB	76071	138
SATB	76083	121	SKPU-12X1/2X25	91321	238	SPK48	74714	159	SSTSMB	76071	155
SATB	76083	141	SKPU-12X1/2X50	91326	238	SPK54	74715	159	SSTXD-B	91410	112
SATB	76083	151	SKPU-12X1X25	91324	238	SPK60	74716	159	SSTXD-B	91410	151
SATHB	76084	121	SKPU-12X1X50	91329	238	SPK72	74717	159	SSTXD-G	91411	151
SATHB	76084	141	SKPU-12X3/4X25	91323	238	SPKHD120	74721	159	SSTXD-S	91409	112
SATHB	76084	151	SKPU-12X3/4X50	91328	238	SPKHD42	74952	159	SSTXD-S	91409	151
SATXDNCB	91414	151	SKPU-12X3/8X25	91320	238	SPKHD48	74953	159	SSTXD-W	91408	112
SATXDPAT	91413	151	SKPU-12X3/8X50	91325	238	SPKHD54	74954	159	SSTXD-W	91408	151
SB2	79970	201	SKPU-12X5/8X25	91322	238	SPKHD60	74955	159	SSTXDMK	91412	112
SB2	79970	204	SKPU-12X5/8X50	91327	238	SPKHD72	74718	159	SSTXDMK	91412	151
SB2F	79988	201	SKPU-4X1/2X25	91289	238	SPKHD84	74719	159	STAK	75847	134
SB2F	79988	204	SKPU-4X1/2X50	91294	238	SPKHD96	74720	159	STAK	75847	120
SB4	78789	189	SKPU-4X1X25	91292	238	SPMK2	75578	159	STAK	75847	122
SB4	78789	192	SKPU-4X1X50	91297	238	SPMK3	75579	159	STAK	75847	141
SB4	78789	195	SKPU-4X3/4X25	91291	238	SPN	74746	159	STAKHD	75892	120
SB4	78789	198	SKPU-4X3/4X50	91296	238	SPPN	74748	159	STAKHD	75892	122
SB4	78789	206	SKPU-4X3/8X25	91288	238	SPPR	74744	159	STAKHD	75892	134
SB4	78789	208	SKPU-4X3/8X50	91293	238	SPYS	74743	159	STAKHD	75892	141
SB4	78789	210	SKPU-4X5/8X25	91290	238	SRBK	74941	162	STGK2	77867	112

Index *by Ordering Number*

ORDERING NUMBER	ITEM CODE	PAGE	ORDERING NUMBER	ITEM CODE	PAGE	ORDERING NUMBER	ITEM CODE	PAGE	ORDERING NUMBER	ITEM CODE	PAGE
STGK2	77867	120	TRB-HT54	78760	52	TRB54	76491	172	USPK	76790	137
STGK2	77867	121	TRB-HT60	78761	45	TRB60	76492	45	UST-P	76794	137
STGK2	77867	141	TRB-HT60	78761	52	TRB60	76492	52	UST-S	77757	137
STGK2	77867	141	TRB-HT66	78762	45	TRB60	76492	172	UST-W	76795	137
STGK2	77867	151	TRB-HT66	78762	52	TRB66	76493	45	USTSC	79299	137
STGK2	77867	151	TRB-HT72	78763	45	TRB66	76493	52	USTSC	79299	137
STGK2-S/S	77635	122	TRB-HT72	78763	52	TRB66	76493	172	USTSCHD	79300	137
STHDMK2-S/S	77634	122	TRB-HT78	78764	45	TRB72	76494	45	USTSCHD	79300	137
STHDPM2-S/S	77633	122	TRB-HT78	78764	52	TRB72	76494	52	USTSCK	79202	137
STJK	74417	19	TRB-HT84	78765	45	TRB72	76494	172	USTSCKHD	79204	137
STJK	74417	137	TRB-HT84	78765	52	TRB78	76697	45	UTC18	76712	135
STJK	74417	165	TRB-HT90	78766	45	TRB78	76697	52	UTC24	76713	135
STJM	74775	19	TRB-HT90	78766	52	TRB78	76697	172	UTC30	76714	135
STJM	74775	137	TRB-HT96	92698	45	TRB84	77047	45	UTC36	76715	135
STJM	74775	165	TRB-HT96	92698	52	TRB84	77047	52	UTC42	76716	135
STKD	74504	165	TRB-UHT102	92788	45	TRB84	77047	172	UTC48	76717	135
STKHSD	74316	165	TRB-UHT102	92788	52	TRB90	77048	45	UTC54	76718	135
STKHSS	74313	165	TRB-UHT108	92794	45	TRB90	77048	52	UTC60	76719	135
STKS	74505	165	TRB-UHT108	92794	52	TRB90	77048	172	UTC72	76720	135
STLP	79535	144	TRB-UHT114	92800	45	TRB96	90358	45	UTC84	76721	135
STS-B	75844	100	TRB-UHT114	92800	52	TRB96	90358	52	UTF18	76724	135
STS-B	75844	111	TRB-UHT18	91865	45	UBTK	76977	137	UTF24	76725	135
STS-B	75844	112	TRB-UHT18	91865	52	UFB18	74448	135	UTF30	76726	135
STS-B	75844	120	TRB-UHT24	91866	45	UFB24	74449	135	UTF36	76727	135
STS-B	75844	121	TRB-UHT24	91866	52	UFB30	74450	135	UTF42	76728	135
STS-B	75844	141	TRB-UHT30	91867	45	UFB36	74451	135	UTF48	76729	135
STS-B	75844	151	TRB-UHT30	91867	52	UFB42	74452	135	UTF54	76730	135
STS-B-S/S	77632	122	TRB-UHT36	91868	45	UFB48	74453	135	UTF60	76731	135
STS-G	78142	120	TRB-UHT36	91868	52	UFB54	74454	135	UTF72	76732	135
STS-G	78142	141	TRB-UHT42	91869	45	UFB60	74455	135	UTF84	76733	135
STS-G	78142	151	TRB-UHT42	91869	52	UFB72	74456	135	VAK	76416	185
STS-G-S/S	79057	122	TRB-UHT48	91870	45	UFB84	74460	135	VBK-72	74457	182
STS-S	75843	100	TRB-UHT48	91870	52	UHDBTK	76978	137	VBK-72	74457	185
STS-S	75843	111	TRB-UHT54	91871	45	UHMK	76793	137	VBK-84	74458	182
STS-S	75843	112	TRB-UHT54	91871	52	UHMK	76793	137	VBK-84	74458	185
STS-S	75843	120	TRB-UHT60	91872	45	UHPB2	79207	137	VBK-96	74459	182
STS-S	75843	121	TRB-UHT60	91872	52	UHSPK	76791	137	VBK-96	74459	185
STS-S	75843	141	TRB-UHT66	91873	45	UHSPK	76791	137	VBK-L	73193	182
STS-S	75843	151	TRB-UHT66	91873	52	UHVC	79453	80	VBK-L	73193	185
STS-S-S/S	77631	122	TRB-UHT72	91874	45	UMBK	76789	137	VBK-M	73192	182
STS-W	75846	111	TRB-UHT72	91874	52	UMBK	76789	137	VBK-M	73192	185
STS-W	75846	112	TRB-UHT78	91875	45	UPBK	76785	137	VBK-S	73191	182
STS-W	75846	120	TRB-UHT78	91875	52	UPFCC	79320	113	VBK-S	73191	185
STS-W	75846	121	TRB-UHT84	91876	45	UPFCC	79320	120	VBK-XS	73190	182
STS-W	75846	141	TRB-UHT84	91876	52	UPSBK	76784	137	VBK-XS	73190	185
STS-W	75846	151	TRB-UHT90	91877	45	URCB18/450	76748	135	VCS	73533	185
STS-W-S/S	77630	122	TRB-UHT90	91877	52	URCB24/600	76749	135	VMBK	73399	185
STTS	74419	19	TRB-UHT96	92782	45	URCB30/750	76750	135	VMF72	74398	185
STTS	74419	137	TRB-UHT96	92782	52	URCB36/900	76751	135	VMF84	74399	185
STTS	74419	165	TRB102	90359	45	URCB42/1050	76752	135	VMF96	74440	185
TEN-LOCK-KIT	77443	156	TRB102	90359	52	URCB48/1200	76753	135	VMFL	74038	185
TL-48	91842	237	TRB108	90360	45	URCB54/1350	76754	135	VMFM	74037	185
TL-48	91842	243	TRB108	90360	52	URCB60/1500	76755	135	VMFS	73549	185
TLAWK-48	93117	242	TRB114	90361	45	URCB72/1800	76756	135	VMFXS	73535	185
TLU-48	93114	243	TRB114	90361	52	URCB84/2100	76757	135	VMLK	74982	185
TLUWK-48	93118	242	TRB18	76485	45	USB12	90409	74	VP72	74395	185
TRB-HT102	92704	45	TRB18	76485	52	USB12	90409	77	VP84	74396	185
TRB-HT102	92704	52	TRB18	76485	172	USB6	90410	74	VP96	74397	185
TRB-HT108	92710	45	TRB24	76486	45	USB6	90410	77	VPL	73410	185
TRB-HT108	92710	52	TRB24	76486	52	USBBRP	90412	77	VPM	73409	185
TRB-HT114	92716	45	TRB24	76486	172	USBP	90411	77	VPS	73408	185
TRB-HT114	92716	52	TRB30	76487	45	USMK	76792	137	VPXS	73400	185
TRB-HT18	78754	45	TRB30	76487	52	USMK	76792	137	VSC	74983	185
TRB-HT18	78754	52	TRB30	76487	172	USP18/450	76772	137	VUBK-72	75574	182
TRB-HT24	78755	45	TRB36	76488	45	USP24/600	76773	137	VUBK-84	75575	182
TRB-HT24	78755	52	TRB36	76488	52	USP30/750	76774	137	VUBK-96	75576	182
TRB-HT30	78756	45	TRB36	76488	172	USP36/900	76775	137	VUBK-L	75573	182
TRB-HT30	78756	52	TRB42	76489	45	USP42/1050	76776	137	VUBK-M	75572	182
TRB-HT36	78757	45	TRB42	76489	52	USP48/1200	76777	137	VUBK-S	75571	182
TRB-HT36	78757	52	TRB42	76489	172	USP54/1350	76778	137	VUBK-XS	75570	182
TRB-HT42	78758	45	TRB48	76490	45	USP60/1500	76779	137	WB24-2-S/S	K2546	160
TRB-HT42	78758	52	TRB48	76490	52	USP72/1800	76780	137	WB24C-2-S/S	K2686	160
TRB-HT48	78759	45	TRB48	76490	172	USP84/2100	76781	137	WB30-2-S/S	K2547	160
TRB-HT48	78759	52	TRB54	76491	45	USPB2	79206	137	WB30C-2-S/S	K2687	160
TRB-HT54	78760	45	TRB54	76491	52	USPK	76790	137	WB36-2-S/S	K2548	160

Index *by Ordering Number*

ORDERING NUMBER	ITEM CODE	PAGE	ORDERING NUMBER	ITEM CODE	PAGE	ORDERING NUMBER	ITEM CODE	PAGE	ORDERING NUMBER	ITEM CODE	PAGE
WB36C-2-S/S	K2688	160	XDSTMPK	90599	77	YCART-48/1200-TC	79816	94	YT-48S	79770	93
WB42-2-S/S	K2549	160	XDSTPAK	90600	77	YCART-48/1200-TC	79816	96	YT-C	79574	96
WB42C-2-S/S	K2689	160	XDSTPSBK	90608	77	YCART-48/1200-W	79616	94	YT-C*	79574	94
WB48-2-S/S	K2550	160	XDSTS-B	90603	77	YCART-48/1200-W	79616	96	YT-HDC	79728	100
WB48C-2-S/S	K2690	160	XDSTS-P	90602	77	YCART-54/1350-HDP	79820	98	YT-HDC*	79728	98
WB54-2-S/S	K2551	160	XDSTS-W	90601	77	YCART-54/1350-HDP	79820	100	YT-HDP	79677	100
WB54C-2-S/S	K2691	160	XDSTTAK	90609	77	YCART-54/1350-HDR	91826	98	YT-HDP*	79677	98
WB60-2-S/S	K2552	160	YCART-18/450-P	79617	94	YCART-54/1350-HDR	91826	100	YT-HDR	91822	100
WB60C-2-S/S	K2692	160	YCART-18/450-P	79617	96	YCART-54/1350-HDTC	79832	98	YT-HDR*	91822	98
WB72-2-S/S	K2553	160	YCART-18/450-R	91805	94	YCART-54/1350-HDTC	79832	100	YT-HDW	79676	100
WB72C-2-S/S	K2693	160	YCART-18/450-R	91805	96	YCART-54/1350-HDW	79826	98	YT-HDW*	79676	98
WB84-2-S/S	K2554	160	YCART-18/450-TC	79811	94	YCART-54/1350-HDW	79826	100	YT-P	79573	96
WB84C-2-S/S	K2694	160	YCART-18/450-TC	79811	96	YCART-60/1500-HDP	79821	98	YT-P*	79573	94
WB96-2-S/S	K2555	160	YCART-18/450-W	79611	94	YCART-60/1500-HDP	79821	100	YT-R	91804	96
WB96C-2-S/S	K2695	160	YCART-18/450-W	79611	96	YCART-60/1500-HDR	91827	98	YT-R*	91804	94
WCLN18-16	71131	252	YCART-24/600-P	79618	94	YCART-60/1500-HDR	91827	100	YT-TC-18S	79759	93
WCLN24-16	71132	252	YCART-24/600-P	79618	96	YCART-60/1500-HDTC	79833	98	YT-TC-24S	79760	93
WCLN24-30	71150	252	YCART-24/600-R	91806	94	YCART-60/1500-HDTC	79833	100	YT-TC-30S	79761	93
WCLN30-16	71133	252	YCART-24/600-R	91806	96	YCART-60/1500-HDW	79827	98	YT-TC-36S	79762	93
WCLN30-30	71134	252	YCART-24/600-TC	79812	94	YCART-60/1500-HDW	79827	100	YT-TC-42S	79763	93
WCLN36-16	71135	252	YCART-24/600-TC	79812	96	YCART-72/1800-HDP	79822	98	YT-TC-48S	79764	93
WCLN36-30	71136	252	YCART-24/600-W	79612	94	YCART-72/1800-HDP	79822	100	YT-W	79572	96
WCLN42-16	71137	252	YCART-24/600-W	79612	96	YCART-72/1800-HDR	91828	98	YT-W*	79572	94
WCLN42-30	71138	252	YCART-30/750-P	79619	94	YCART-72/1800-HDR	91828	100	YTA-18/450	79593	96
WCLN48-16	71139	252	YCART-30/750-P	79619	96	YCART-72/1800-HDTC	79834	98	YTA-24/600	79594	96
WCLN48-30	71144	252	YCART-30/750-R	91807	94	YCART-72/1800-HDTC	79834	100	YTA-30/750	79595	96
WCLN54-16	71149	252	YCART-30/750-R	91807	96	YCART-72/1800-HDW	79828	98	YTA-36/900	79596	96
WCLN54-30	71145	252	YCART-30/750-TC	79813	94	YCART-72/1800-HDW	79828	100	YTA-42/1050	79597	96
WCLN60-16	71165	252	YCART-30/750-TC	79813	96	YST-P	79837	96	YTA-48/1200	79598	96
WCLN60-30	71146	252	YCART-30/750-W	79613	94	YST-P-R	91815	96	YTAC	79623	96
WCLN72-16	71151	252	YCART-30/750-W	79613	96	YST-S	79838	96	YTACHD	79835	100
WCLN72-30	71147	252	YCART-36/900-HDP	79817	98	YST-Y	79836	96	YTAHD-36/900	79805	100
WFRD18-16	72187	251	YCART-36/900-HDP	79817	100	YST-Y-R	91814	96	YTAHD-42/1050	79806	100
WFRD18-30	72188	251	YCART-36/900-HDR	91823	98	YSTANK	79857	96	YTAHD-48/1200	79807	100
WFRD24-16	72189	251	YCART-36/900-HDR	91823	100	YSTANKHD	79858	100	YTAHD-54/1350	79808	100
WFRD24-30	72190	251	YCART-36/900-HDTC	79829	98	YSTBKPU-R	91813	96	YTAHD-60/1500	79809	100
WFRD30-16	72191	251	YCART-36/900-HDTC	79829	100	YSTDBK	79844	93	YTAHD-72/1800	79810	100
WFRD30-30	72192	251	YCART-36/900-HDW	79823	98	YSTDBK	79844	96	YTHD-36S	79783	97
WFRD36-16	72193	251	YCART-36/900-HDW	79823	100	YSTDBK	79844	155	YTHD-42S	79784	97
WFRD36-30	72194	251	YCART-36/900-P	79620	94	YSTGBK	79845	96	YTHD-48S	79785	97
WFRD42-16	72195	251	YCART-36/900-P	79620	96	YSTGBK-R	91811	96	YTHD-54S	79786	97
WFRD42-30	72196	251	YCART-36/900-R	91808	94	YSTHD-BK	79842	100	YTHD-60S	79787	97
WFRD48-16	72197	251	YCART-36/900-R	91808	96	YSTHD-BL	79841	100	YTHD-72S	79788	97
WFRD48-30	72198	251	YCART-36/900-TC	79814	94	YSTHD-BL-R	91834	100	YTHD-TC-36S	79777	97
WFRD54-16	72199	251	YCART-36/900-TC	79814	96	YSTHD-GR	79839	100	YTHD-TC-42S	79778	97
WFRD54-30	72200	251	YCART-36/900-W	79614	94	YSTHD-GR-R	91833	100	YTHD-TC-48S	79779	97
WFRD60-16	72201	251	YCART-36/900-W	79614	96	YSTHD-S	79840	100	YTHD-TC-54S	79780	97
WFRD60-30	72202	251	YCART-42/1050-HDP	79818	98	YSTHDBK-B	79856	100	YTHD-TC-60S	79781	97
WFRD72-16	72203	251	YCART-42/1050-HDP	79818	100	YSTHDBK-BL-R	91831	100	YTHD-TC-72S	79782	97
WFRD72-30	72204	251	YCART-42/1050-HDR	91824	98	YSTHDBK-GR-R	91832	100	YTHDR-36S	91816	97
WND18-16	72169	251	YCART-42/1050-HDR	91824	100	YSTHDBK-W	79853	100	YTHDR-42S	91817	97
WND18-30	72170	251	YCART-42/1050-HDTC	79830	98	YSTHDDBK	79850	97	YTHDR-48S	91818	97
WND24-16	72171	251	YCART-42/1050-HDTC	79830	100	YSTHDDBK	79850	100	YTHDR-54S	91819	97
WND24-30	72172	251	YCART-42/1050-HDW	79824	98	YSTHDDBK	79850	155	YTHDR-60S	91820	97
WND30-16	72173	251	YCART-42/1050-HDW	79824	100	YSTHDGBK	79851	100	YTHDR-72S	91821	97
WND30-30	72174	251	YCART-42/1050-P	79621	94	YSTHDGBK-R	91829	100	YTHDW-36S	79789	97
WND36-16	72175	251	YCART-42/1050-P	79621	96	YSTHDLBK	79852	100	YTHDW-42S	79790	97
WND36-30	72176	251	YCART-42/1050-R	91809	94	YSTHDLBK-R	91830	100	YTHDW-48S	79791	97
WND42-16	72177	251	YCART-42/1050-R	91809	96	YSTHDMB	79849	100	YTHDW-54S	79792	97
WND42-30	72178	251	YCART-42/1050-TC	79815	94	YSTHDS-BL	79798	100	YTHDW-60S	79793	97
WND48-16	72179	251	YCART-42/1050-TC	79815	96	YSTHDS-GR	79797	100	YTHDW-72S	79794	97
WND48-30	72180	251	YCART-42/1050-W	79615	94	YSTLBK	79846	96	YTP-18/450	79587	96
WND54-16	72181	251	YCART-42/1050-W	79615	96	YSTLBK-R	91812	96	YTP-24/600	79588	96
WND54-30	72182	251	YCART-48/1200-HDP	79819	98	YSTMB	79843	96	YTP-30/750	79589	96
WND60-16	72183	251	YCART-48/1200-HDP	79819	100	YSTPHDMK	79854	100	YTP-36/900	79590	96
WND60-30	72184	251	YCART-48/1200-HDR	91825	98	YSTPMK	79848	96	YTP-42/1050	79591	96
WND72-16	72185	251	YCART-48/1200-HDR	91825	100	YSTS-P	79796	96	YTP-48/1200	79592	96
WND72-30	72186	251	YCART-48/1200-HDTC	79831	98	YSTS-Y	79795	96	YTPHD-36/900	79799	100
XDST-B	90613	77	YCART-48/1200-HDTC	79831	100	YSTTBK-B	79855	96	YTPHD-42/1050	79800	100
XDST-P	90612	77	YCART-48/1200-HDW	79825	98	YSTTBK-W	79847	96	YTPHD-48/1200	79801	100
XDST-W	90611	77	YCART-48/1200-HDW	79825	100	YT-18S	79765	93	YTPHD-54/1350	79802	100
XDSTBK-B	90606	77	YCART-48/1200-P	79622	94	YT-24S	79766	93	YTPHD-60/1500	79803	100
XDSTBK-P	90605	77	YCART-48/1200-P	79622	96	YT-30S	79767	93	YTPHD-72/1800	79804	100
XDSTBK-W	90604	77	YCART-48/1200-R	91810	94	YT-36S	79768	93	YTR-18S	91798	93
XDSTJNK	90610	77	YCART-48/1200-R	91810	96	YT-42S	79769	93	YTR-24S	91799	93

Index *by Ordering Number*

ORDERING NUMBER	ITEM CODE	PAGE	ORDERING NUMBER	ITEM CODE	PAGE	ORDERING NUMBER	ITEM CODE	PAGE	ORDERING NUMBER	ITEM CODE	PAGE
YTR-30S	91800	93									
YTR-36S	91801	93									
YTR-42S	91802	93									
YTR-48S	91803	93									
YTW-18S	79771	93									
YTW-24S	79772	93									
YTW-30S	79773	93									
YTW-36S	79774	93									
YTW-42S	79775	93									
YTW-48S	79776	93									

Index *by Ordering Number*

ORDERING NUMBER	ITEM CODE	PAGE	ORDERING NUMBER	ITEM CODE	PAGE	ORDERING NUMBER	ITEM CODE	PAGE	ORDERING NUMBER	ITEM CODE	PAGE

Partners in Productivity

2525 Wisconsin Avenue, Downers Grove, Illinois 60515
Phone: 1-630-971-0150 Fax: 1-630-971-1180

www.flexco.com

©2021 Flexible Steel Lacing Company Printed in U.S.A.
For Reorder: 102233 10/18/21