Y-Type™ Standard-Duty Secondary Belt Cleaner

Installation, Operation and Maintenance Manual

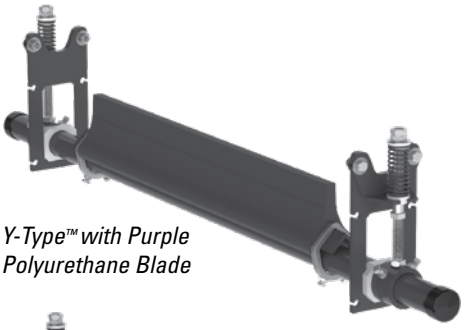

Y-Type™ with Purple Polyurethane Blade

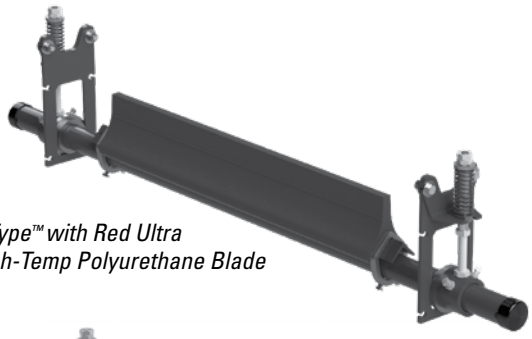

Y-Type™ with Red Ultra High-Temp Polyurethane Blade

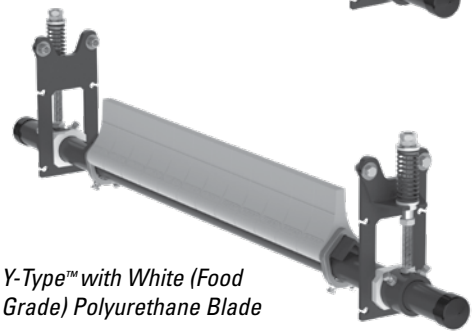

Y-Type™ with White (Food Grade) Polyurethane Blade

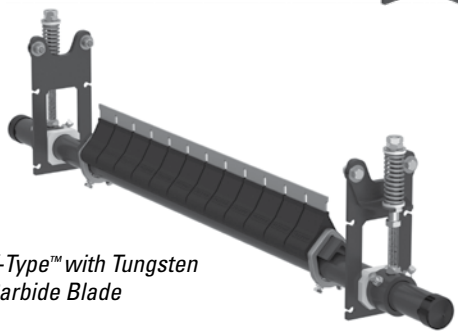

Y-Type™ with Tungsten Carbide Blade

FLEXCO

Y-Type™ Secondary Belt Cleaner

Serial Number: _____

Purchase Date: _____

Purchased From: _____

Installation Date: _____

Serial number information can be found on the Serial Number Label included in the Information Packet found in the cleaner carton.

This information will be helpful for any future inquiries or questions about belt cleaner replacement parts, specifications or troubleshooting.

Table of Contents

Section 1 – Important Information **4**
1.1 General Introduction 4
1.2 User Benefits 4
1.3 Service Option 4

Section 2 – Safety Considerations and Precautions **5**
2.1 Stationary Conveyors 5
2.2 Operating Conveyors 5

Section 3 – Pre-Installation Checks and Options **6**
3.1 Checklist 6
3.2 Optional Installation Accessories 6

Section 4 – Y-Type™ Belt Cleaner Installation Instructions **7**
4.1 Installation Instructions - Pull-up Tensioning 7
4.2 Installation Instructions - Push-up Tensioning 10

Section 5 – Pre-Operation Checklist and Testing **11**
5.1 Pre-Op Checklist 11
5.2 Test Run the Conveyor 11

Section 6 – Maintenance **12**
6.1 New Installation Inspection 12
6.2 Routine Visual Inspection 12
6.3 Routine Physical Inspection 12
6.4 Blade Replacement Instructions 13
6.5 Maintenance Log 14
6.6 Cleaner Maintenance Checklist 15

Section 7 – Troubleshooting **16**

Section 8 – Specs and CAD Drawings **17**
8.1 Specs and Guidelines 17
8.2 CAD Drawing - Y-Type Standard-Duty with White, Purple or Red Polyurethane Blades 18
8.3 CAD Drawing - Y-Type Standard-Duty with Tungsten Carbide Blades 19

Section 9 – Replacement Parts **20**

Section 10 – Other Flexco Conveyor Products **23**

Section 1 – Important Information

1.1 General Introduction

We at Flexco are very pleased that you have selected a Y-Type™ Secondary Belt Cleaner for your conveyor system.

This manual will help you to understand the operation of this product and assist you in making it work up to its maximum efficiency over its lifetime of service.

It is essential for safe and efficient operation that the information and guidelines presented be properly understood and implemented. This manual will provide safety precautions, installation instructions, maintenance procedures and troubleshooting tips.

If, however, you have any questions or problems that are not covered, please visit our web site or contact our Customer Service Department:

Customer Service: 49-7428-9406-0

Visit www.flexco.com for other Flexco locations and products.

Please read this manual thoroughly and pass it on to any others who will be directly responsible for installation, operation and maintenance of this cleaner. While we have tried to make the installation and service tasks as easy and simple as possible**, it does however require correct installation and regular inspections and adjustments to maintain top working condition.**

1.2 User Benefits

Correct installation and regular maintenance will provide the following benefits for your operation:

- Reduced conveyor downtime
- Reduced man-hour labor
- Lower maintenance budget costs
- Increased service life for the belt cleaner and other conveyor components

1.3 Service Option

The Y-Type™ Secondary Belt Cleaner is designed to be easily installed and serviced by your on-site personnel. However, if you would prefer complete turn-key factory service, please contact your local Flexco Field Representative.

Section 2 – Safety Considerations and Precautions

Before installing and operating the Y-Type™ Secondary Belt Cleaner, it is important to review and understand the following safety information.

There are set-up, maintenance and operational activities involving both **stationary** and **operating** conveyors. Each case has a safety protocol.

2.1 Stationary Conveyors

The following activities are performed on stationary conveyors:

- Installation
- Blade replacement
- Repairs
- Tension adjustments
- Cleaning

⚠ DANGER

It is imperative that OSHA/MSHA Lockout/Tagout (LOTO) regulations, 29 CFR 1910.147, be followed before undertaking the preceding activities. Failure to use LOTO exposes workers to uncontrolled behavior of the belt cleaner caused by movement of the conveyor belt. Severe injury or death can result.

Before working:

- Lockout/Tagout the conveyor power source
- Disengage any takeups
- Clear the conveyor belt or clamp securely in place

⚠ WARNING

Use Personal Protective Equipment (PPE):

- Safety eyewear
- Hardhats
- Safety footwear

Close quarters, springs and heavy components create a worksite that compromises a worker's eyes, feet and skull.

PPE must be worn to control the foreseeable hazards associated with conveyor belt cleaners. Serious injuries can be avoided.

2.2 Operating Conveyors

There are two routine tasks that must be performed while the conveyor is running:

- Inspection of the cleaning performance
- Dynamic troubleshooting

⚠ DANGER

Every belt cleaner is an in-running nip hazard. Never touch or prod an operating cleaner. Cleaner hazards cause instantaneous amputation and entrapment.

⚠ WARNING

Belt cleaners can become projectile hazards. Stay as far from the cleaner as practical and use safety eyewear and headgear. Missiles can inflict serious injury.

⚠ WARNING

Never adjust anything on an operating cleaner. Unforseeable belt projections and tears can catch on cleaners and cause violent movements of the cleaner structure. Flailing hardware can cause serious injury or death.

Section 3 – Pre-installation Checks and Options

3.1 Checklist

- Check that the cleaner size is correct for the beltline width
- Check belt cleaner carton and make sure all parts are included
- Review “Tools Needed” list on the top of installation instructions
- Check the conveyor site:
  - Will the cleaner be installed on a chute
  - Is the install on an open head pulley requiring mounting structure

3.2 Optional Installation Accessories

Pole extenders are available for wide, non-standard conveyor structures.

77423
Pole Extender Kit
- Provides 750 mm (30") of extended pole length
- Includes 2 pole extenders

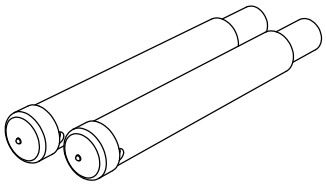

79844
YST Drop Bracket Kit
- Includes 2 drop brackets

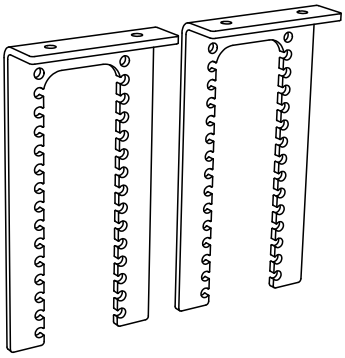

Optional Mounting Accessories

Description	Ordering Number	Item Code	Wt. Kg.
Pole Extender Kit	RAPEK	77423	8.2
YST SD Drop Bracket Kit	YSTDBK	79844	12.6

Lead time: 1 working day

Section 4 – Installation Instructions

4.1 Y-Type™ Standard-Duty Secondary Belt Cleaner - Pull-up Tensioning (Polyurethane or Carbide Option)

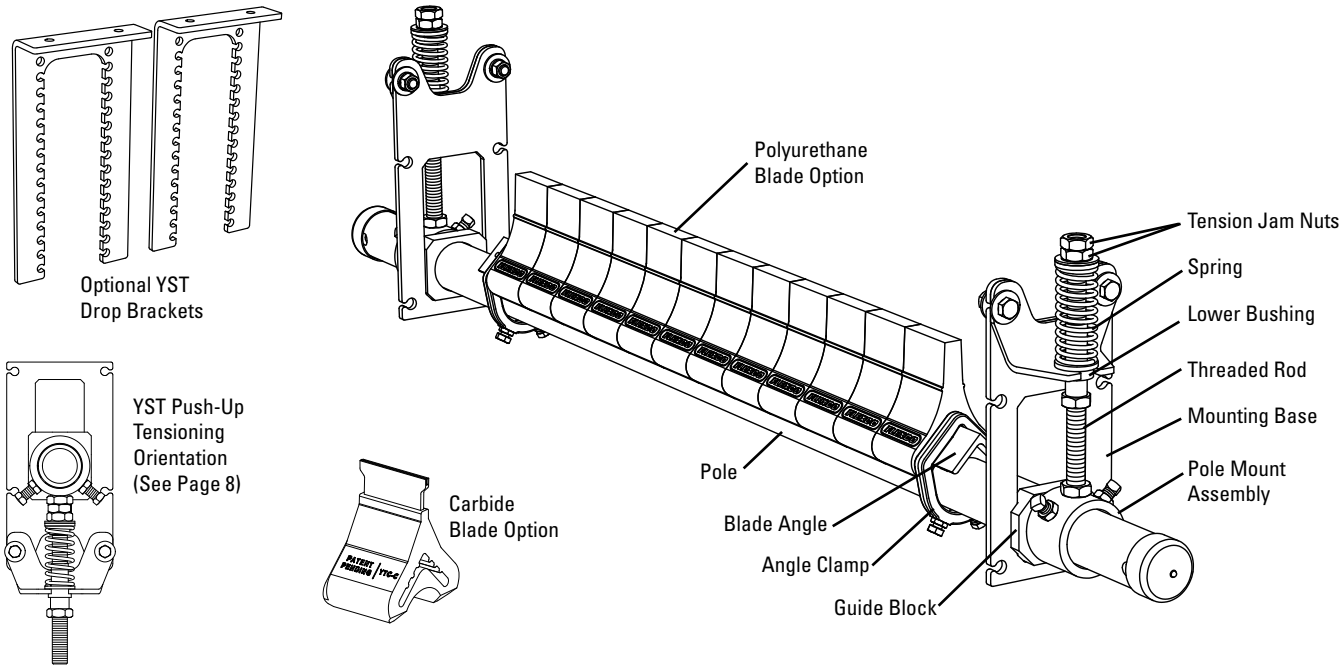

Physically lock out and tag the conveyor at the power source before you begin cleaner installation.

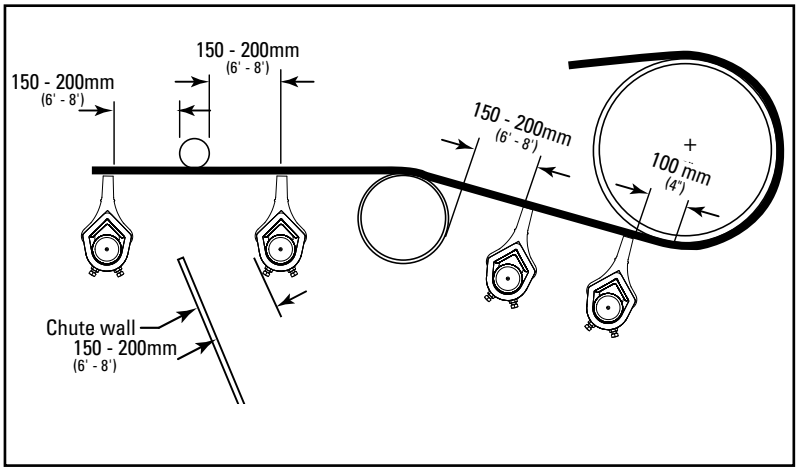

Tools Needed

- 16mm (5/8") Wrench
- 13mm (1/2") Wrench
- 19mm (3/4") Wrench
- 29mm (1 1/8") Wrench

OR Large Adjustable Wrench & Channel Locks

- Tape Measure
- Ratchet with 19mm (3/4") Socket
- (2) 150nn (6") C-Clamps (for Temporary Positioning of Mounting Brackets)
- Cutting Torch and/ or Welder
- Marking Pen

Before You Begin:

- For chute mounting it may be necessary to cut an access hole to allow for installation and inspections. (See dimensions in Step 1.)
- Follow all safety precautions when using a cutting torch.
- If welding, protect all fastener threads from weld spatter.
- For cleaner clearance requirements see chart at right.

Clearance Requirements for Installation

	Vertical	Horizontal
Y-Type Polyurethane	210 mm (8-1/4")	108 mm (4-1/4")
Y-Type Carbide	184 mm (7-3/4")	108 mm (4-1/4")

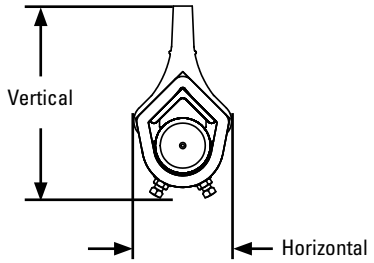

4.1 Y-Type™ Standard-Duty Secondary Belt Cleaner - Pull-up Tensioning

Fig. 1a

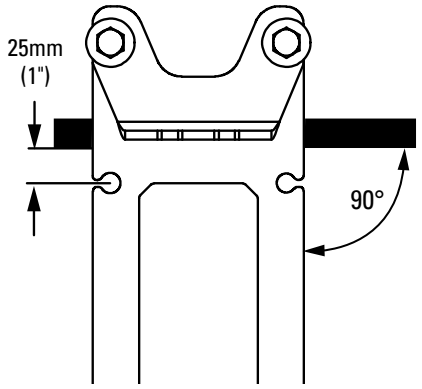

Fig. 1b (Chute Mounting)

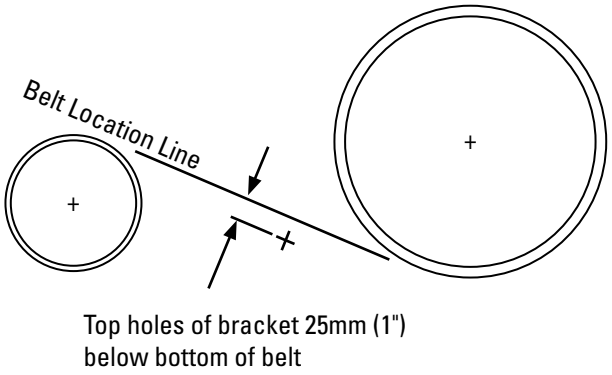

1. **Install spring tensioner mounting bases. (For push-up tensioning refer to additional instructions on Page 8.)**
   Clamp mounting base into position so top mounting holes are located 25mm below bottom of belt (Fig. 1a). With flippable bracket positioned as shown in Fig. 1a for pull-up tensioning, bolt first mounting base in place. Locate and mark mounting base position on other side but do not install at this time.

   For chute mounting: For chute installation a belt location line must first be established. Draw a line on chute replicating this location. If head pulley and snub pulley are close, it may be necessary to assume an approximate belt line between the two. In the determined location draw a line perpendicular to belt line. Make a mark at 25mm below bottom of belt (Fig. 1b).

   Locate a mounting bracket perpendicular to belt location line (Fig. 1b), aligning top mounting bracket flange with mark made in previous step. Bolt bracket in place. Repeat this step on opposite side. Cut access holes using provided mounting template.

   NOTE: The mounting brackets must be aligned perpendicular to the belt.

   NOTE: If structure or chute is angled or out of alignment, ensure the tensioner or mounting brackets are plumb (Fig. 1c).

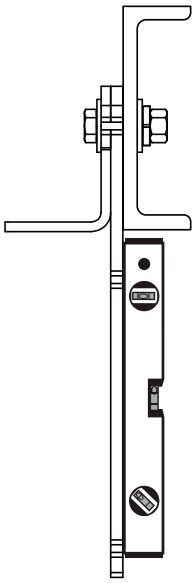

Fig. 1c

2. **Install the pole.** Insert pole assembly into installed mounting base from the inside. Then slide opposite side mounting base onto pole and bolt in place (Fig. 2).

Fig. 2

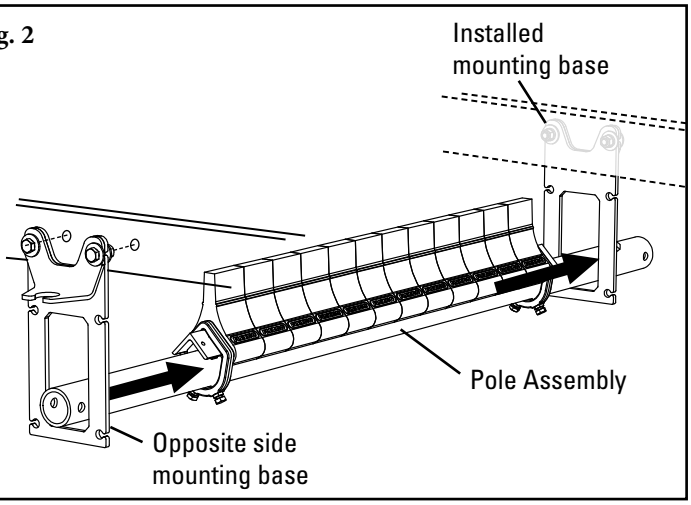

4.1 Y-Type™ Standard-Duty Secondary Belt Cleaner - Pull-up Tensioning

3. **Assemble tensioners.** Slide guide blocks over each end of pole and position in mounting base as shown (Fig. 3a). Slide tensioner assembly over each end of pole and position lower bushing into mounting base (Fig. 3b).

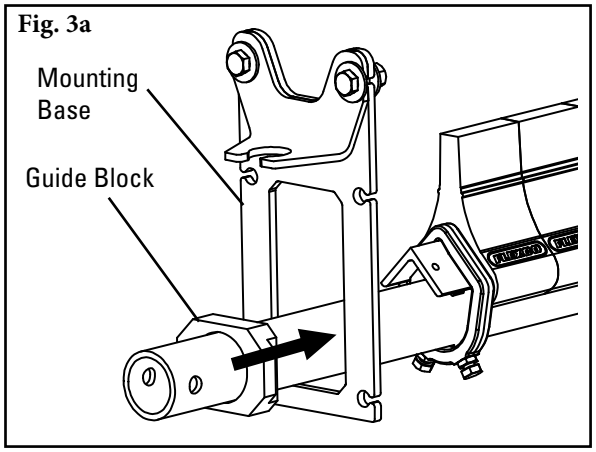

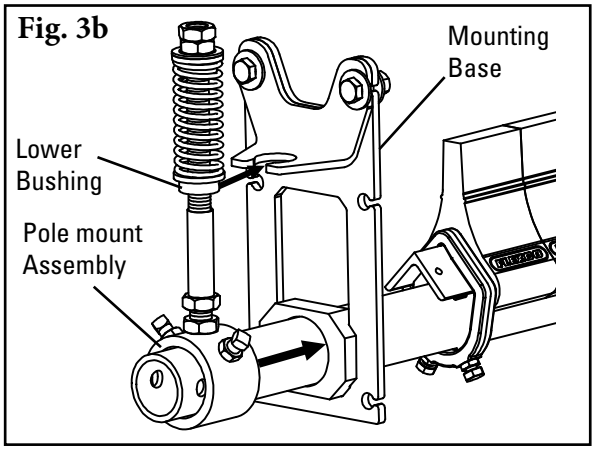

4. **Secure pole.** Center pole/blades on belt and rotate pole until blades are perpendicular to belt. Tighten the two locking bolts and nuts on each tensioner assembly to lock pole in place (Fig. 4).

5. **Set blade tension.** Loosen top tension jam nut on both sides and turn nuts until correct spring compression is reached (Fig. 5). Spring compression is determined by spring length. See chart below for correct spring length for your specific cleaner (polyurethane or carbide) and belt width.

6. **Set adjusting rod sleeve.** After setting blade tension, screw adjusting rod sleeve up into the UHMW bushing until 38mm (1-1/2") is showing (Fig. 6). Tighten adjusting rod sleeve jam nut.

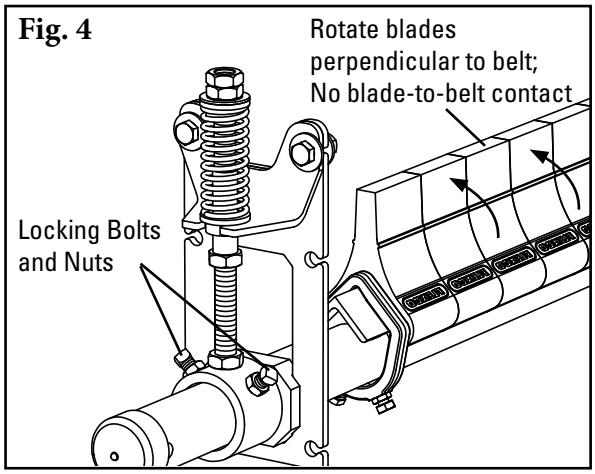

YST SD Tensioner Spring Length Chart

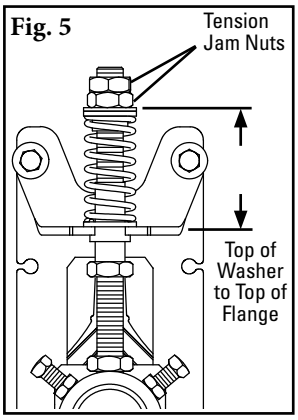

Blade Width		Carbide Tip		Polyurethane Tip				Red UHT Polyurethane Tip			
		Silver Springs		Yellow Springs		Purple Springs		Yellow Springs		Purple Springs	
mm	in.	mm	in.	mm	in.	mm	in.	mm	in.	mm	in.
450	18	105	4 1/8	83	3 1/4	92	3 5/8	79	3 1/8	92	3 5/8
600	24	102	4	73	2 7/8	86	3 3/8	70	2 3/4	86	3 3/8
750	30	98	3 7/8	67	2 5/8	79	3 1/8	64	2 1/2	79	3 1/8
900	36	95	3 3/4	57	2 1/4	73	2 7/8	57	2 1/4	73	2 7/8
1050	42	92	3 5/8	NA	NA	67	2 5/8	NA	NA	67	2 5/8
1200	48	89	3 1/2	NA	NA	60	2 3/8	NA	NA	60	2 3/8

Shading indicates preferred spring option.

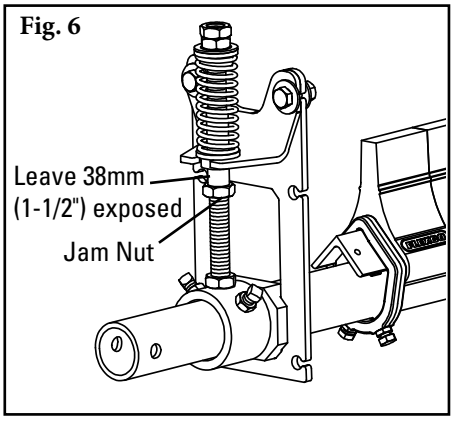

7. **Confirm pole moves freely.** After adding tension, push pole down and confirm it rebounds/moves freely. If there is any binding confirm the tensioners are plumb. Loosen locking bolts and nuts (Fig. 4) and adjust the collar until tensioner moves freely, then tighten the locking bolts and nuts.

4.2 Y-Type™ Standard-Duty Secondary Belt Cleaner - Push-Up Tensioning (Polyurethane or Carbide Option)

Fig. 1a

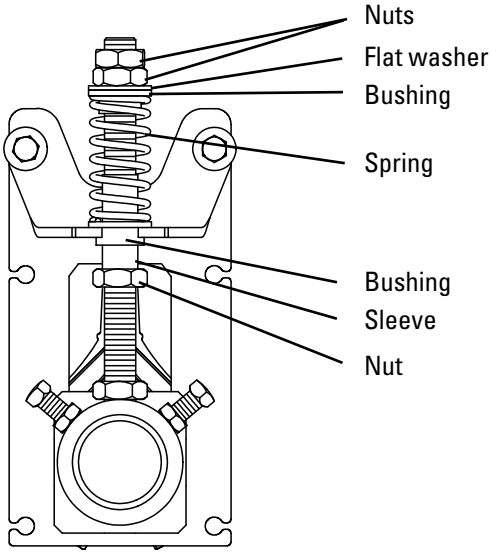

Fig. 1b

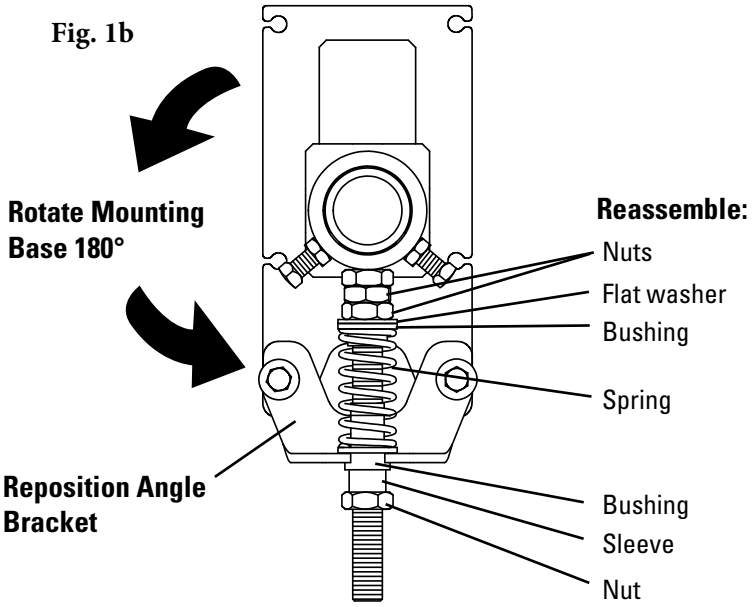

1. **Reconfigure the standard pull-up tensioner to the push-up style.** Remove 3 nuts, flat washer, 2 bushings, spring, and sleeve (Fig. 1a). Rotate the mounting base so the two flanges point downward and reposition the angle bracket as shown in Fig. 1b. Reassemble components on threaded rod in the order shown (Fig. 1b).

2. **Install the tensioner mounting bases.** Mount the bases to the structure or chute so that the top holes in the brackets are 25mm (1") below the bottom of the belt (Fig. 2).

3. **Install the cleaner pole and set the blade angle.** Follow installation steps 2-4 from the cleaner instructions on Page 6 and 7. **Note:** be sure the lock bolts on the torsion pole mount have been securely tightened to lock the pole in place before moving to Step 4.

4. **Set the blade tension.** Turn the 2 upper tension nuts until the spring is compressed to the length shown on the Spring Length Chart below. Tighten the 2 tension nuts together to prevent loosening.

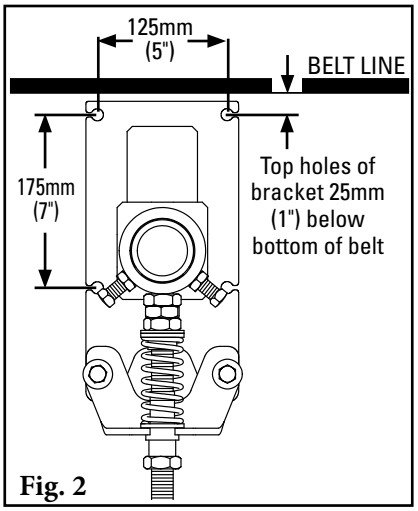

Fig. 2

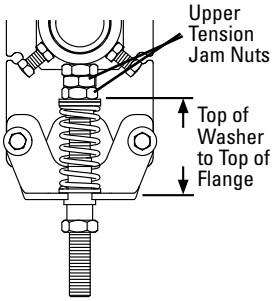

YST SD Tensioner Spring Length Chart

Blade Width		Carbide Tip		Purple or White Polyurethane Tip				Red UHT Polyurethane Tip			
		Silver Springs		Yellow Springs		Purple Springs		Yellow Springs		Purple Springs	
mm	in.	mm	in.	mm	in.	mm	in.	mm	in.	mm	in.
450	18	105	4 1/8	83	3 1/4	92	3 5/8	79	3 1/8	92	3 5/8
600	24	102	4	73	2 7/8	86	3 3/8	70	2 3/4	86	3 3/8
750	30	98	3 7/8	67	2 5/8	79	3 1/8	64	2 1/2	79	3 1/8
900	36	95	3 3/4	57	2 1/4	73	2 7/8	57	2 1/4	73	2 7/8
1050	42	92	3 5/8	NA	NA	67	2 5/8	NA	NA	67	2 5/8
1200	48	89	3 1/2	NA	NA	60	2 3/8	NA	NA	60	2 3/8

Shading indicates preferred spring option.

5. **Confirm pole moves freely.** After adding tension, push pole down and confirm it rebounds/moves freely. If there is any binding confirm the tensioners are plumb. Loosen locking bolts and nuts and adjust the collar until tensioner moves freely, then tighten the locking bolts and nuts.

Section 5 – Pre-Operation Checklist and Testing

5.1 Pre-Op Checklist

- Recheck that all fasteners are tightened properly.
- Add pole caps.
- Apply all supplied labels to the cleaner.
- Check the blade location on the belt.
- Be sure that all installation materials and tools have been removed from belt and conveyor area.

5.2 Test Run the Conveyor

- Run conveyor for at least 15 minutes and inspect cleaning performance.
- If vibration occurs or more cleaning efficiency is desired, increase blade tension by making 3mm (1/8") compression adjustments on the tension springs.
- Check adjusting brackets and tips for proper tensioning.
- Make adjustments as necessary.

NOTE: Observing the cleaner when it is running and performing properly will help to detect problems and determine when adjustments are needed.

Section 6 – Maintenance

Flexco belt cleaners are designed to operate with minimum maintenance. However, to maintain superior performance some service is required. When the cleaner is installed, a regular maintenance program should be set up. This program will ensure the cleaner operates at optimal efficiency and problems can be identified and fixed before the cleaner stops working.

All safety procedures for inspection of equipment (stationary or operating) must be observed. The Y-Type™ Secondary Belt Cleaner operates at the discharge end of the conveyor and is in direct contact with the moving belt. Only visual observations can be made while the belt is running. Service tasks can be done only with the conveyor stopped and by observing the correct lockout/tagout procedures.

6.1 New Installation Inspection

After the new cleaner has run for a few days, a visual inspection should be made to ensure the cleaner is performing properly. Make adjustments as needed.

6.2 Routine Visual Inspection (every 2-4 weeks)

A visual inspection of the cleaner and belt can determine if:

- Spring length is correct length for optimal tensioning.
- Pole can move up and down with no binding of the tensioners.
- Belt looks clean or if there are areas that are dirty.
- Blade is worn out and needs to be replaced.
- There is damage to the blade or other cleaner components.
- Fugitive material is built up on cleaner or in transfer area.
- There is cover damage to the belt.
- There is vibration or bouncing of the cleaner on the belt.
- There is material buildup on snub pulley (if used).
- Significant signs of carryback exist.

If any of the above conditions exist, a determination should be made on when the conveyor can be stopped for cleaner maintenance.

6.3 Routine Physical Inspection (every 6-8 weeks)

When the conveyor is not in operation and properly locked and tagged out, perform a physical inspection of the cleaner through the following tasks:

- Clean material buildup from cleaner blade and pole.
- Verify pole can move smoothly up and down.
- Closely inspect blade for wear and any damage. Replace if needed.
- Ensure full blade to belt contact.
- Inspect cleaner pole for damage.
- Inspect all fasteners for tightness and wear. Tighten or replace as needed.
- Replace any worn or damaged components.
- Check tension of cleaner blade to belt. Adjust tension if necessary using the steps on page 9 or 10.
- When maintenance tasks are completed, test run conveyor to ensure cleaner is performing properly.

6.4 Blade Replacement Instructions (Carbide or Polyurethane)

BEFORE YOU BEGIN:

Physically Lock Out and Tag the Conveyor at the Power Source.

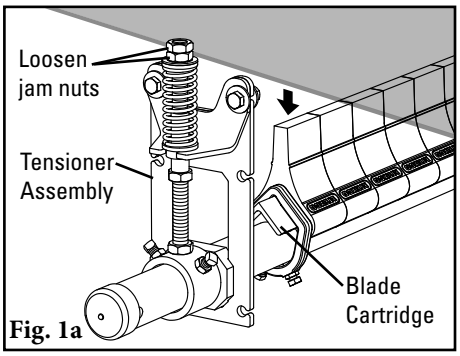

Fig. 1a

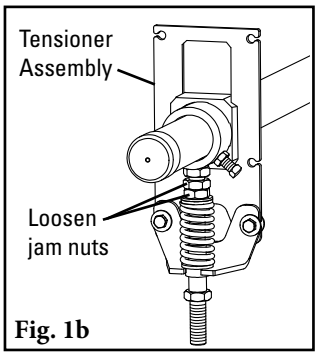

Fig. 1b

1. **Lower cleaner away from belt.** Loosen jam nuts on threaded rods to remove tension and lower the cleaner (Fig. 1a - Pull-up Tensioning; Fig. 1b - Push-up Tensioning). If mounted on a chute, remove near side tensioner assembly to access blade cartridge.

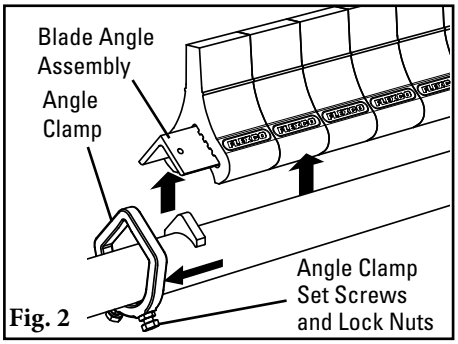

Fig. 2

2. **Remove blade angle from pole.** Loosen angle clamp lock nuts and set screws on both sides of cleaner (Fig. 2). Slide angle clamps off each end of angle and remove blade angle assembly from pole.
3. **Replace the cushions.** Cushions may be removed from the angle by sliding them off each end, or entire angle with all cushions may be replaced at once.
4. **Reinstall blade angle.** Set new cushions and angle back on pole and slide angle clamps back onto the angle (Fig. 3). Tighten angle clamp set screws and lock nuts on both sides. Verify blades are centered and perpendicular to belt.
5. **Set blade tension.** Turn adjustment nuts until correct spring compression is reached (Fig 4a and 4b). Spring compression is determined by spring length. See chart below for correct spring length for your belt width.
6. **Test run cleaner and inspect cleaning performance.** If vibration occurs or more cleaning efficiency is desired, increase blade tension by making 3mm (1/8") compression adjustments on tension springs.

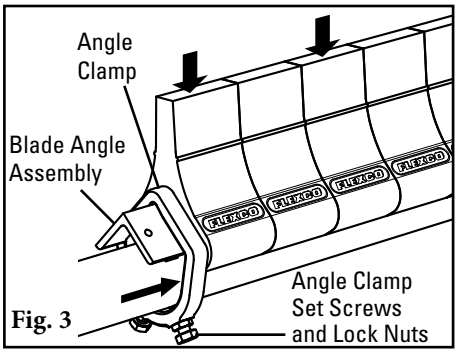

Fig. 3

Fig. 4a - Pull-Up Tensioning

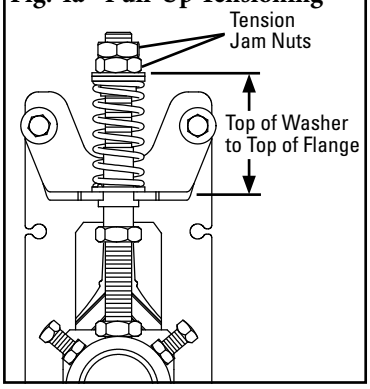

Fig. 4b - Push-Up Tensioning

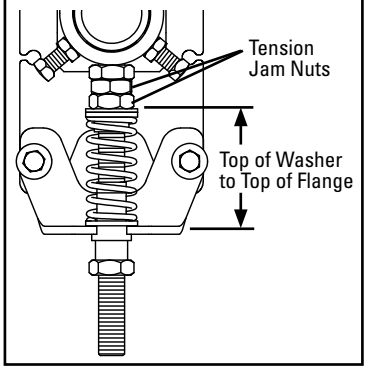

YST SD Tensioner Spring Length Chart

Blade Width		Carbide Tip		Purple or White Polyurethane Tip				Red UHT Polyurethane Tip			
		Silver Springs		Yellow Springs		Purple Springs		Yellow Springs		Purple Springs	
mm	in.	mm	in.	mm	in.	mm	in.	mm	in.	mm	in.
450	18	105	4 1/8	83	3 1/4	92	3 5/8	79	3 1/8	92	3 5/8
600	24	102	4	73	2 7/8	86	3 3/8	70	2 3/4	86	3 3/8
750	30	98	3 7/8	67	2 5/8	79	3 1/8	64	2 1/2	79	3 1/8
900	36	95	3 3/4	57	2 1/4	73	2 7/8	57	2 1/4	73	2 7/8
1050	42	92	3 5/8	NA	NA	67	2 5/8	NA	NA	67	2 5/8
1200	48	89	3 1/2	NA	NA	60	2 3/8	NA	NA	60	2 3/8

Shading indicates preferred spring option.

6.5 Maintenance Log

Conveyor Name/No. _____

Date: _____ Work done by: _____ Service Quote #: _____

Activity: _____

Date: _____ Work done by: _____ Service Quote #: _____

Activity: _____

Date: _____ Work done by: _____ Service Quote #: _____

Activity: _____

Date: _____ Work done by: _____ Service Quote #: _____

Activity: _____

Date: _____ Work done by: _____ Service Quote #: _____

Activity: _____

Date: _____ Work done by: _____ Service Quote #: _____

Activity: _____

Date: _____ Work done by: _____ Service Quote #: _____

Activity: _____

Date: _____ Work done by: _____ Service Quote #: _____

Activity: _____

Date: _____ Work done by: _____ Service Quote #: _____

Activity: _____

6.6 Cleaner Maintenance Checklist

Site: _____ **Inspected by**: _____ **Date:** _____

Belt Cleaner: _____ **Serial Number:** _____

Beltline Information:

Beltline Number: _____ Belt Condition: _____

Belt Width: ☐ 450mm (18") ☐ 600mm (24") ☐ 750mm (30") ☐ 900mm (36") ☐ 1050mm (42") ☐ 1200mm (48")

Head Pulley Diameter *(Belt & Lagging):* _____ Belt Speed:_____ fpm Belt Thickness: _____

Belt Splice:_____ Condition of Splice:_____ Number of Splices:_____ ☐ Skived ☐ Unskived

Material conveyed: _____

Days per week run:_____ Hours per day run:_____

Blade Life:

Date blade installed:_____ Date blade inspected:_____ Estimated blade life:_____

Is blade making complete contact with belt? ☐ Yes ☐ No

Blade wear: Left _____ Middle _____ Right _____

Blade condition: ☐ Good ☐ Grooved ☐ Smiled ☐ Not contacting belt ☐ Damaged

Measurement of spring: Required _____ Currently _____

Was Cleaner Adjusted: ☐ Yes ☐ No

Pole Condition: ☐ Good ☐ Bent ☐ Worn

Lagging: ☐ Side Lag ☐ Ceramic ☐ Rubber ☐ Other ☐ None

Condition of lagging: ☐ Good ☐ Bad ☐ Other _____

Cleaner's Overall Performance: (Rate the following 1 - 5, 1= very poor - 5 = very good)

Appearance: ☐ Comments:_____

Location: ☐ Comments:_____

Maintenance: ☐ Comments:_____

Performance: ☐ Comments:_____

Other comments: _____

_____

_____

_____

_____

_____

_____

Section 7 – Troubleshooting

Problem	Possible Cause	Possible Solutions
Vibration	Cleaner secure bolts not set	Ensure all locking nuts are tight (Loctite)
	Cleaner not set up correctly	Ensure cleaner set up properly (check tip angle)
	Belt tension too high	Ensure cleaner can conform to belt, or replace with alternate Flexco® secondary cleaner
	Belt flap	Introduce hold-down roller to flatten belt
	Cleaner over-tensioned	Ensure cleaner is correctly tensioned
	Cleaner under-tensioned	Ensure cleaner is correctly tensioned
Material buildup on cleaner	Cleaner not set up correctly	Ensure cleaner set up properly (check tip angle)
	Buildup on chute	Ensure cleaner is not located too close to back of chute, allowing buildup
	Cleaner being overburdened	Introduce Flexco precleaner
	Excessive sticky material	Frequently clean unit of buildup
Cleaner not conforming to belt	Cleaner not set up correctly	Ensure cleaner set up properly (check tip angle)
	Belt tension too high	Ensure cleaner can conform to belt, introduce hold-down roller, or replace with alternate Flexco secondary cleaner
	Belt flap	Introduce hold-down roller to flatten belt
	Cleaner cannot conform	Ensure cleaner can conform to belt, introduce hold-down roller, or replace with alternate Flexco secondary cleaner
Material passing cleaner	Cleaner not set up correctly	Ensure cleaner set up properly (check tip angle)
	Cleaner tension too low	Ensure cleaner is correctly tensioned
	Cleaner blade worn/damaged	Check blade for wear, damage and chips, replace where necessary
	Cleaner being overburdened	Introduce Flexco precleaner
	Belt flap	Introduce hold-down roller to flatten belt
	Belt worn or grooved	Introduce water spray pole
	Cleaner cannot conform	Ensure cleaner can conform to belt, introduce hold-down roller, or replace with alternate Flexco secondary cleaner
Missing material in belt center only	Cupped Belt	Install hold-down roller and reset blade angle
	Cleaner blade worn/damaged	Check blade for wear, damage and chips, replace where necessary
Missing material on outer edges only	Cupped Belt	Install hold-down roller and reset blade angle
	Cleaner blade worn/damaged	Check blade for wear, damage and chips, replace where necessary
Tensioners binding	Tensioners not aligned properly	Adjust mounting bases until tensioners travel without binding. Refer to instructions for alignment requirements

Section 8 – Specifications and CAD Drawings

8.1 Specifications and Guidelines

Pole Length Specifications

Cleaner Size		Pole Length		Maximum Conveyor Span	
mm	in.	mm	in.	mm	in.
450	18	1200	48	1025	40
600	24	1350	54	1175	46
750	30	1500	60	1325	52
900	36	1650	66	1475	58
1050	42	1800	72	1625	64
1200	48	1950	78	1775	70

Pole Length - Belt +750mm (30")
Pole Diameter - 60mm (2-3/8")

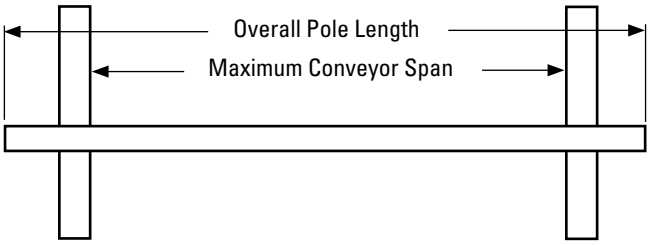

Clearance Guidelines for Installation

Cleaner Type	Belt Width/ Cleaner Size		Horizontal Clearance Required		Vertical Clearance Required	
	mm	in.	mm	in.	mm	in.
Y-Type® Polyurethane	450 -1200	18 - 48	110	4-1/4	210	8/1/04
Y-Type Carbide	450 -1200	18 - 48	110	4-1/4	184	7/3/04

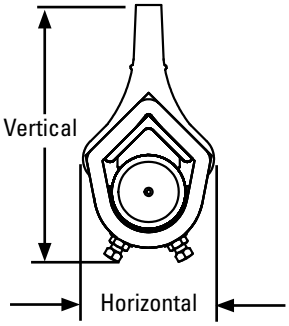

Y-Type Blade Specifications

Cushion	Durometer	Temperature Range
Purple (Standard)	86A	-35° to 82° C -30° to 180°F
White (Food Grade)‡	83A	-35° to 82° C -30° to 180°F
Red (Ultra High-Temp)	90A	Up to 200° C (400° C) Spikes to 232° C (450° F)
Carbide	86A	-35° to 82° C -30° to 180°F

‡ All ingredients used in the polyurethane formulation of this blade comply with the relevant requirements of 21 CFR (FDA Code of Federal Regulations) for use in repeated bulk dry food applications

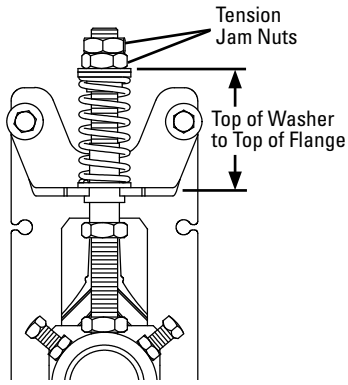

Pull-Up Tensioner Configuration (SD)

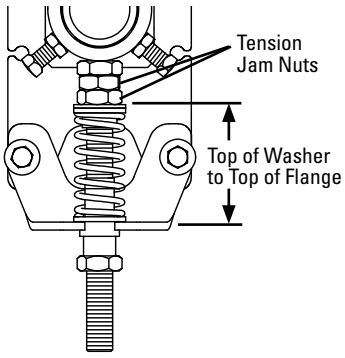

Push-Up Tensioner Configuration (SD)

YST SD Tensioner Spring Length Chart

Blade Width		Carbide Tip		Purple or White Polyurethane Tip				Red UHT Polyurethane Tip			
		Silver Springs		Yellow Springs		Purple Springs		Yellow Springs		Purple Springs	
mm	in.	mm	in.	mm	in.	mm	in.	mm	in.	mm	in.
450	18	105	4 1/8	83	3 1/4	92	3 5/8	79	3 1/8	92	3 5/8
600	24	102	4	73	2 7/8	86	3 3/8	70	2 3/4	86	3 3/8
750	30	98	3 7/8	67	2 5/8	79	3 1/8	64	2 1/2	79	3 1/8
900	36	95	3 3/4	57	2 1/4	73	2 7/8	57	2 1/4	73	2 7/8
1050	42	92	3 5/8	NA	NA	67	2 5/8	NA	NA	67	2 5/8
1200	48	89	3 1/2	NA	NA	60	2 3/8	NA	NA	60	2 3/8

Shading indicates preferred spring option.

Specifications:

- Maximum Belt Speed..... 3M/sec (600 FPM)
- Usable Blade Wear Length..... 50mm (2") (Polyurethane)
  6mm (1/4") (Carbide)
- Blade Materials ..... **Purple:** Polyurethane (proprietary blend for abrasion resistance and long wear)
  White: Polyurethane (chemical resistant/food grade)
  Red: Polyurethane (ultra high-temp)
  Carbide: Tungsten Carbide
- Available for Belt Widths..... 450 to 1200mm (18" to 48"). Other sizes available upon request.
- CEMA Cleaner Rating..... Class 2 (Standard-duty with polyurethane blades)
  Class 3 (Standard-duty with Carbide blades)

8.2 CAD Drawing – Y-Type™ Polyurethane

SPECIFICATIONS				PURPLE BLADES		WHITE BLADES		RED BLADES	
BELT WIDTH 'A'		POLE LENGTH 'B'		ORDER NUMBER	ITEM CODE	ORDER NUMBER	ITEM CODE	ORDER NUMBER	ITEM CODE
in	mm	in	mm						
18	450	48	1219	YT-18S	79765	YTW-18S	79771	YTR-18S	91798
24	600	54	1371	YT-24S	79766	YTW-24S	79772	YTR-24S	91799
30	750	60	1524	YT-30S	79767	YTW-30S	79773	YTR-30S	91800
36	900	66	1676	YT-36S	79768	YTW-36S	79774	YTR-36S	91801
42	1050	72	1829	YT-42S	79769	YTW-42S	79775	YTR-42S	91802
48	1200	78	1981	YT-48S	79700	YTW-48S	79776	YTR-48S	91803

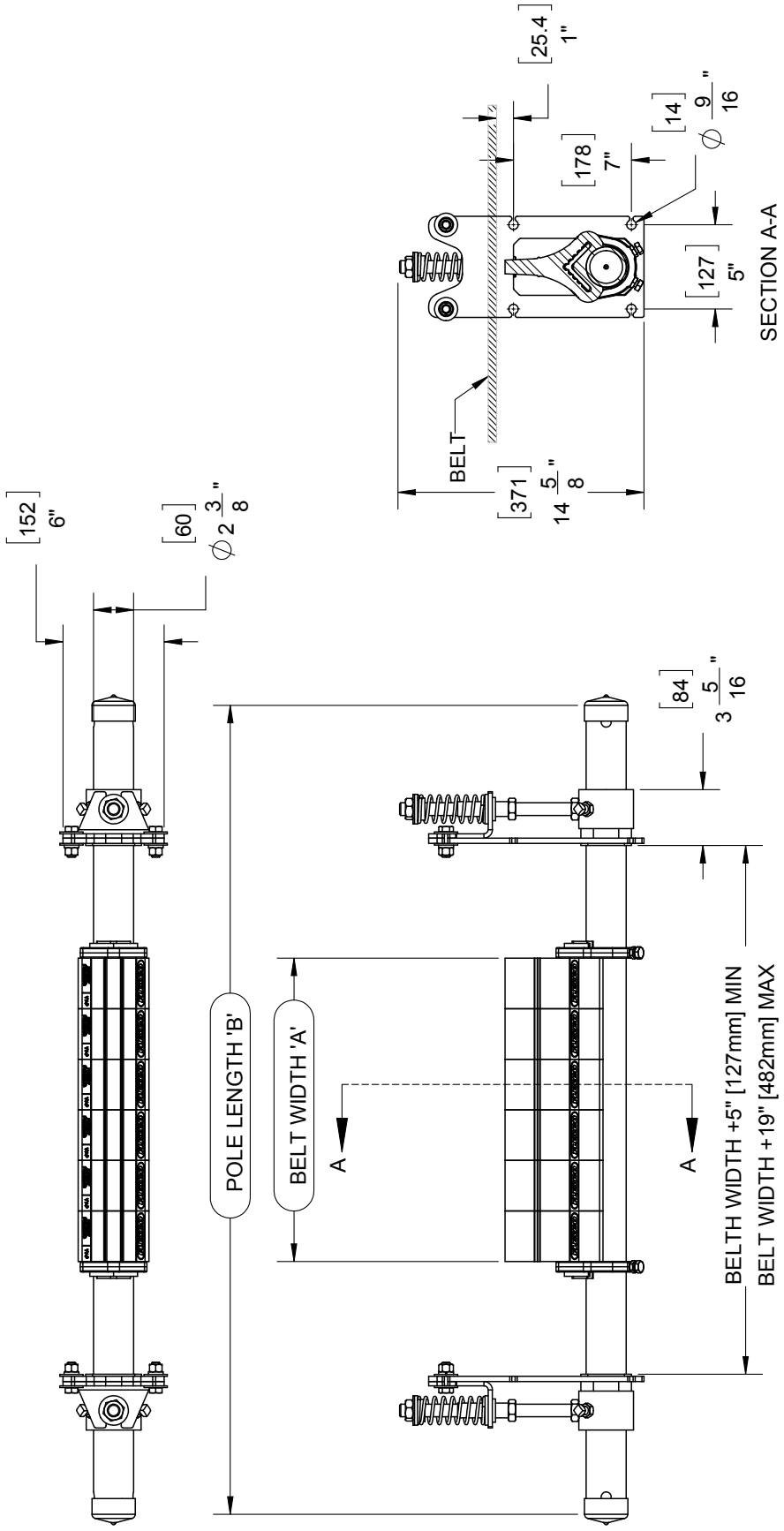

8.3 CAD Drawing – Y-Type™ Carbide

SPECIFICATIONS					ORDER NUMBER	ITEM CODE	ITEM 1 POLE		ITEM 2 BLADE ANGLE	
BELT WIDTH 'A'		POLE LENGTH 'B'								
(IN)	(mm)	(IN)	(mm)				ORDER NUMBER	ITEM CODE	ORDER NUMBER	ITEM CODE
18	450	48	1219	YT-TC-18S	79759	YTP-18/450	79587	YTA-18/450	79593
24	600	54	1371	YT-TC-24S	79760	YTP-24/600	79588	YTA-24/600	79594
30	700	60	1524	YT-TC-30S	79761	YTP-30/750	79589	YTA-30/750	79595
36	900	66	1676	YT-TC-36S	79762	YTP-36/900	79590	YTA-36/900	79596
42	1050	72	1829	YT-TC-42S	79763	YTP-42/1050	79591	YTA-42/1050	79597
48	1200	78	1981	YT-TC-48S	79764	YTP-48/1200	79592	YTA-48/1200	79598

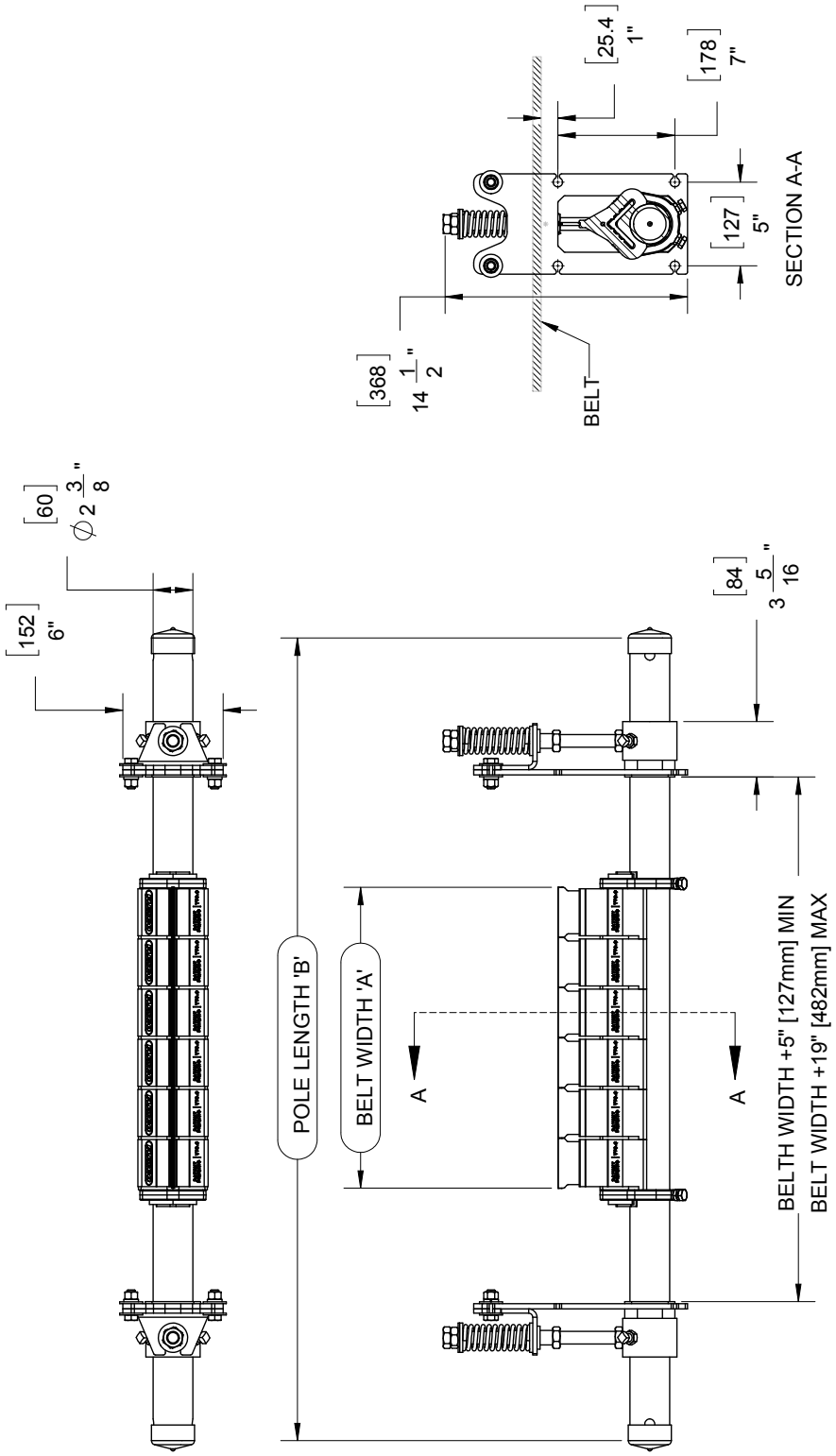

Section 9 – Replacement Parts List

9.1 Replacement Parts List- Y-Type™ Secondary Belt Cleaner

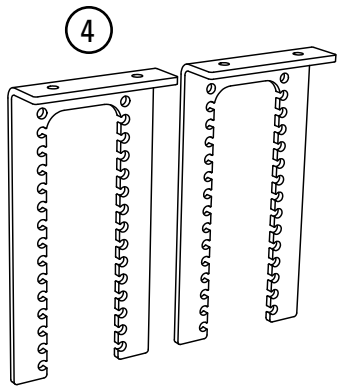

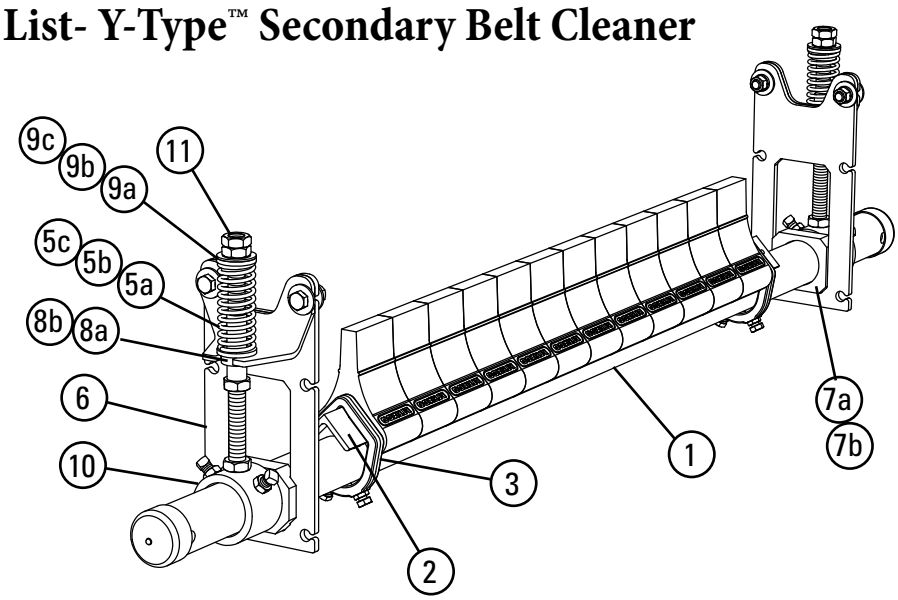

Replacement Parts

REF	DESCRIPTION	ORDERING NUMBER	ITEM CODE	WT. KG.
1	450mm (18") Y-Type™ Pole	YTP-18/450	79587	9.2
	600mm (24") Y-Type Pole	YTP-24/600	79588	10.3
	750mm (30") Y-Type Pole	YTP-30/750	79589	11.4
	900mm (36") Y-Type Pole	YTP-36/900	79590	12.6
	1050mm (42") Y-Type Pole	YTP-42/1050	79591	13.7
	1200mm (48") Y-Type Pole	YTP-48/1200	79592	14.8
2	450mm (18") Y-Type Cushion Angle	YTA-18/450	79593	2.6
	600mm (24") Y-Type Cushion Angle	YTA-24/600	79594	3.3
	750mm (30") Y-Type Cushion Angle	YTA-30/750	79595	4.0
	900mm (36") Y-Type Cushion Angle	YTA-36/900	79596	4.7
	1050mm (42") Y-Type Cushion Angle	YTA-42/1050	79597	5.4
	1200mm (48") Y-Type Cushion Angle	YTA-48/1200	79598	6.2
3	Y-Type Angle Clamp* (2 Clamps)	YTAC	79623	1.0
4	YST Drop Bracket Kit (2 Brackets)	YSTDBK	79844	8.9
5a	YST Spring Yellow	YSTS-Y	79795	0.1
5b	YST Spring Purple	YSTS-P	79796	0.2
5c	YST Spring Silver (Y-Type Carbide Cleaners)	CTS-S	77743	0.2
6	YST Mounting Bracket (incl. Angle Bracket)	YSTMB	79843	1.5
7a	YST Guide Block Kit (Pair)	YSTGBK	79845	0.2
7b	YST Guide Block Kit UHT (Pair)	YSTGBK-R	91811	0.2
8a	YST Lower Bushing Kit (Pair)	YSTLBK	79846	0.05
8b	YST Lower Bushing Kit UHT (Pair)	YSTLBK-R	91812	0.05
9a	YST Top Bushing Kit White (Pair)	YSTTBK-W	79847	0.05
9b	YST Top Bushing Kit Black (Pair)	YSTTBK-B	79855	0.05
9c	YST Top Bushing Kit UHT (Pair)	YSTBKPU-R	91813	0.05
10	YST Pole Mount Kit*	YSTPMK	79848	2.0
11	YST Adjusting Rod Nut Kit	YSTANK	79857	0.1
-	YST Tensioner w/Yellow Spring (Pair) (incl. 2 ea. item 5a, 6, 10, 11; 1 ea. items 7a, 8a, 9a)	YST-Y	79836	8.3
-	YST Tensioner w/Purple Spring (Pair) (incl. 2 ea. item 5b, 6, 10, 11; 1 ea. items 7a, 8a, 9a)	YST-P	79837	8.4
-	YST Tensioner w/Silver Spring (Pair) (incl. 2 ea. item 5c, 6, 10, 11; 1 ea. items 7a, 8a, 9b)	YST-S	79838	8.5
-	YST Tensioner w/Yellow Spring UHT (Pair) (incl. 2 ea. item 5a, 6, 10, 11; 1 ea. items 7b, 8b, 9c)	YST-Y-R	91814	8.3
-	YST Tensioner w/Purple Spring UHT (Pair) (incl. 2 ea. item 5b, 6, 10, 11; 1 ea. items 7b, 8b, 9c)	YST-P-R	91815	8.4

*Hardware included
Lead time: 1 working day

Blades Required per Cleaner Size

mm	450	600	750	900	1050	1200
in.	18	24	30	36	42	48
Blades Required	6	8	10	12	14	16

Replacement Blades/Blade Cartridges

REF	DESCRIPTION	ORDERING NUMBER	ITEM CODE	WT. KG.
12	Y-Type Carbide Blade (single)	YT-C	79574	0.5
13	450mm (18") Y-Type Carbide Blade Cartridge	YCART-18/450-TC	79811	5.7
	600mm (24") Y-Type Carbide Blade Cartridge	YCART-24/600-TC	79812	7.5
	750mm (30") Y-Type Carbide Blade Cartridge	YCART-30/750-TC	79813	9.3
	900mm (36")Y-Type Carbide Blade Cartridge	YCART-36/900-TC	79814	11.0
	1050mm (42") Y-Type Carbide Blade Cartridge	YCART-42/1050-TC	79815	12.7
	1200mm (48") Y-Type Carbide Blade Cartridge	YCART-48/1200-TC	79816	14.5
14	Y-Type Purple Polyurethane Blade (single)	YT-P	79573	0.5
15	450mm (18") Y-Type Purple Blade Cartridge	YCART-18/450-P	79617	5.9
	600mm (24") Y-Type Purple Blade Cartridge	YCART-24/600-P	79618	7.8
	750mm (30") Y-Type Purple Blade Cartridge	YCART-30/750-P	79619	9.6
	900mm (36")Y-Type Purple Blade Cartridge	YCART-36/900-P	79620	11.4
	1050mm (42") Y-Type Purple Blade Cartridge	YCART-42/1050-P	79621	13.2
	1200mm (48") Y-Type Purple Blade Cartridge	YCART-48/1200-P	79622	15.0
16	Y-Type White Polyurethane Blade (single)	YT-W	79572	0.5
17	450mm (18") Y-Type White Blade Cartridge	YCART-18/450-W	79611	5.9
	600mm (24") Y-Type White Blade Cartridge	YCART-24/600-W	79612	7.8
	750mm (30") Y-Type White Blade Cartridge	YCART-30/750-W	79613	9.6
	900mm (36")Y-Type White Blade Cartridge	YCART-36/900-W	79614	11.4
	1050mm (42") Y-Type White Blade Cartridge	YCART-42/1050-W	79615	13.2
	1200mm (48") Y-Type White Blade Cartridge	YCART-48/1200-W	79616	15.0
18	Y-Type Red Polyurethane Blade (single)	YT-R	91804	0.5
19	18" (450mm) Y-Type Red Blade Cartridge	YCART-18/450-R	91805	5.9
	24" (600mm) Y-Type Red Blade Cartridge	YCART-24/600-R	91806	7.8
	30" (750mm) Y-Type Red Blade Cartridge	YCART-30/750-R	91807	9.6
	36" (900mm) Y-Type Red Blade Cartridge	YCART-36/900-R	91808	11.4
	42" (1050mm) Y-Type Red Blade Cartridge	YCART-42/1050-R	91809	13.2
	48" (1200mm) Y-Type Red Blade Cartridge	YCART-48/1200-R	91810	15.0

Lead time: 1 working day

Spring Tensioner Selection Chart

Cleaner Blade Width	79838 YST-S	79836 YST-Y	79837 YST-P	91814 YST-Y-R	91815 YST-P-R
Carbide 450 - 1200mm (18" - 48")	X				
Polyurethane 450 - 750mm (18" - 30")		X			
Polyurethane 900 - 1200mm (36" - 48")			X		
Red UHT PU 450 - 750mm (18" - 30")				X	
Red UHT PU 900 - 1200mm (36" - 48")					X

Section 10 – Other Flexco Conveyor Products

Flexco provides many conveyor products that help your conveyors to run more efficiently and safely. These components solve typical conveyor problems and improve productivity.
Here is a quick overview on just a few of them:

EZP1 Precleaner

- Patented ConShear™ blade renews its cleaning edge as it wears
- Visual Tension Check™ for optimal blade tensioning and simple retensioning
- Quick and easy one-pin blade replacement
- Material Path Option™ for optimal cleaning and reduced maintenance

Flexco Slider and Impact Beds

- Adjusting troughing angles for easy installation and adjustability
- Long-wearing UHMW for sealing the load zone
- Offered in both Light & Medium-duty designs to affordably fit your application

Inspection Door

- Multiple door sizes available for a variety of applications.
- Dust-tight silicone seal between mounting plate and chute wall.
- Latch mechanism is designed to allow easy adjustability to tightness of door seal.
- Optional hinged, bolted screen allows safe visual inspection and does not require removal for authorized workers to access the chute.

PT Smart™ Belt Trainer

- Patented "pivot & tilt" design for superior training action
- Dual sensor rollers on each side to minimize belt damage
- Pivot point guaranteed not to seize or freeze up
- Simple brackets and component construction ensure a quick and easy installation

Flexco Specialty Belt Cleaners

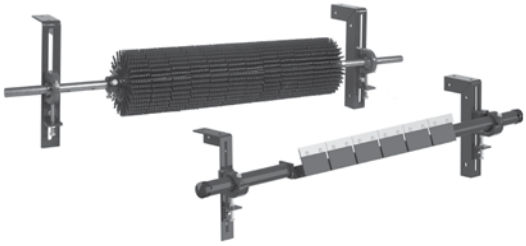

- "Limited space" cleaners for tight conveyor applications
- High Temp cleaners for severe, high-heat applications
- A rubber fingered cleaner for chevron and raised-rib belts
- Multiple cleaner styles in stainless steel for corrosive applications

Belt Plows

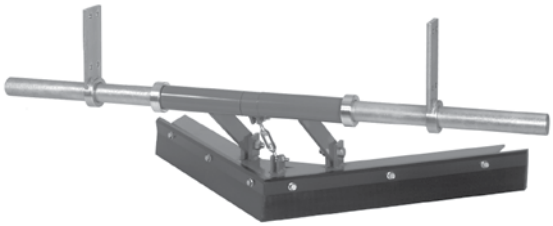

- A belt cleaner for the tail pulley
- Exclusive blade design quickly spirals debris off the belt
- Economical and easy to service
- Available in vee or diagonal models

Flexco Europe GmbH • Maybachstrasse 9 • 72348 Rosenfeld • Germany
Tel: +49-7428-9406-0 • Fax: +49-7428-9406-260 • E-mail: europe@flexco.com

Visit **www.flexco.com** for other Flexco locations and products.

©2021 Flexible Steel Lacing Company. 04/14//21. For reorder: X6281