FGP Food Grade Precleaner

Installation, Operation & Maintenance Manual

www.flexco.com

FLEXCO

Ordering Number: _____

Serial Number: _____

Purchase Date: _____

Purchased From: _____

Installation Date: _____

This information will be helpful for any future inquiries or questions about belt cleaner replacement parts, specifications or troubleshooting.

Table of Contents

Section 1 - Important Information 4
1.1 Introduction 4
1.2 User Benefits 4
1.3 Service Option 4

Section 2 - Safety Considerations and Precautions 5
2.1 Stationary Conveyors 5
2.2 Operating Conveyors 5

Section 3 - Pre-Installation Checks and Options 6
3.1 Checklist 6
3.2 Conveyor Mounting Structure 7

Section 4 - Installation Instructions 8

Section 5 - Pre-Operation Checklist and Testing 12
5.1 Pre-Op Checklist 12
5.2 Test Run the Conveyor 12

Section 6 - Maintenance 13
6.1 New Installation Inspection 13
6.2 Routine Visual Inspection 13
6.3 Routine Physical Inspection 13
6.4 Cleaning Instructions 13
6.5 Blade Wear Inspection 14
6.6 Blade Replacement Instructions 15
6.7 Maintenance Log 16
6.8 Cleaner Maintenance Checklist 17

Section 7 - Troubleshooting 18

Section 8 - Specs and CAD Drawings 19
8.1 Specs and Guidelines 19
8.2 CAD Drawing - Food Grade Precleaner with Blue or White Blade 20
8.3 CAD Drawing - Food Grade Precleaner with Metal Detectable or Dual Durometer Blade 21

Section 9 - Replacement Parts 22
9.1 Replacement Parts List 22

Section 1 - Important Information

1.1 Introduction

We at Flexco are very pleased that you have selected the FGP Precleaner for your conveyor system.

This manual will help you to understand the operation of this product and assist you in making it work up to its maximum efficiency over its lifetime of service.

It is essential for safe and efficient operation that the information and guidelines presented here be properly understood and implemented. This manual will provide safety precautions, installation instructions, maintenance procedures and troubleshooting tips.

If you have any questions or problems that are not covered in this manual, please visit our web site or contact our Customer Service Department:

Customer Service: 1-800-541-8028

Visit www.flexco.com for other Flexco locations and products.

Please read this manual thoroughly and pass it on to any others who will be directly responsible for installation, operation and maintenance of this cleaner. While we have tried to make the installation and service tasks as simple as possible, it does require correct installation and regular inspections and adjustments to maintain top performance.

1.2 User Benefits

Correct installation and regular maintenance will provide the following benefits for your operation:

- Reduced conveyor downtime
- Reduced man-hour labor
- Lower maintenance costs
- Increased service life for the belt cleaner and other conveyor components

1.3 Service Option

The FGP Precleaner is designed to be easily installed and serviced by your on-site personnel. However, if you would prefer complete turn-key factory service, please contact your local Flexco Field Engineer or your Flexco Distributor.

Section 2 - Safety Considerations and Precautions

2.1 Stationary Conveyors

Before installing and operating the FGP Precleaner, it is important to review and understand the following safety information. There are set-up, maintenance and operational activities involving both **stationary** and **operating** conveyors. Each case has a safety protocol.

The following activities are performed on stationary conveyors:

- Installation
- Tension adjustments
- Blade replacement
- Cleaning
- Repairs

⚠ DANGER

It is imperative that OSHA Lockout/Tagout (LOTO) regulations, 29 CFR 1910.147, be followed before undertaking the preceding activities. Failure to use LOTO exposes workers to uncontrolled behavior of the belt cleaner caused by movement of the conveyor belt. Severe injury or death can result.

Before working:

- Lockout/Tagout the conveyor power source
- Disengage any takeups
- Clear the conveyor belt or clamp securely in place

⚠ WARNING

Use Personal Protective Equipment (PPE):

- Safety eyewear
- Hardhats
- Safety footwear

Close quarters, springs and heavy components create a worksite that compromises a worker's eyes, feet and skull.
PPE must be worn to control the foreseeable hazards associated with conveyor belt cleaners. Serious injuries can be avoided.

2.2 Operating Conveyors

There are two routine tasks that must be performed while the conveyor is running:

- Inspection of the cleaning performance
- Dynamic troubleshooting

⚠ DANGER

Every belt cleaner is an in-running nip hazard. Never touch or prod an operating cleaner. Cleaner hazards can cause instantaneous amputation and entrapment.

⚠ WARNING

Belt cleaners can become projectile hazards. Stay as far from the cleaner as practical and use safety eyewear and headgear. Missiles can inflict serious injury.

⚠ WARNING

Never adjust anything on an operating cleaner. Unforseeable belt projections and tears can catch on cleaners and cause violent movements of the cleaner structure. Flailing hardware can cause serious injury or death.

Section 3 - Pre-installation Checks and Options

3.1 Checklist

- Check that the cleaner size is correct for the beltline width
- Check the belt cleaner carton and make sure all the parts are included
- Review the "Tools Needed" list on the top of the installation instructions
- Inspect the belt and splice(s) for damage (tears, gouges, raised splices, etc.) that may interfere with the cleaner blade.
- Primary mounted belt cleaners are not generally recommended for use on impression cover, textured or cleated belts.
- Check the conveyor site:
  Will the cleaner be installed on a chute?
  Is the install on an open head pulley requiring mounting structure?
  Are there obstructions that may require cleaner location adjustments?

Caution: All parts of the FGP Food Grade Precleaner must be cleaned and sanitized in compliance with your company's policies and any applicable legal or regulatory requirements prior to installation and use.

3.2 Conveyor Mounting Structure

The first step in installing your FGP Food Grade Precleaner is to verify that there is adequate structure at the head pulley for mounting the cleaner.

1. Measure pulley diameter (A), including lagging and belt (Fig. 1).
2. Locate the overall pulley diameter that most closely matches yours on chart A, and use the corresponding X, Y, & C dimensions to locate the position of the center of the cleaner pole (Fig. 1).

Chart A: Pole Location

A		X		Y		C	
mm	in.	mm	in.	mm	in.	mm	in.
51	2.0	24	0.95	76	2.98	80	3.13
64	2.5	30	1.19	77	3.03	83	3.25
76	3.0	37	1.44	78	3.08	86	3.39
89	3.5	43	1.68	79	3.12	90	3.55
102	4.0	49	1.93	81	3.17	94	3.71
114	4.5	55	2.18	82	3.22	99	3.88
127	5.0	61	2.42	83	3.27	103	4.06
140	5.5	68	2.67	84	3.31	108	4.25
152	6.0	74	2.91	85	3.36	113	4.45
165	6.5	80	3.16	87	3.41	118	4.64
178	7.0	86	3.40	88	3.46	123	4.85
191	7.5	93	3.65	89	3.51	129	5.06
203	8.0	99	3.89	90	3.55	134	5.27
216	8.5	105	4.14	91	3.60	139	5.48
229	9.0	111	4.38	93	3.65	145	5.70
241	9.5	118	4.63	94	3.70	150	5.92
254	10.0	124	4.88	95	3.74	156	6.14

A = Diameter of pulley + lagging thickness + belt thickness
C = Centerline of pulley to centerline of cleaner pole.

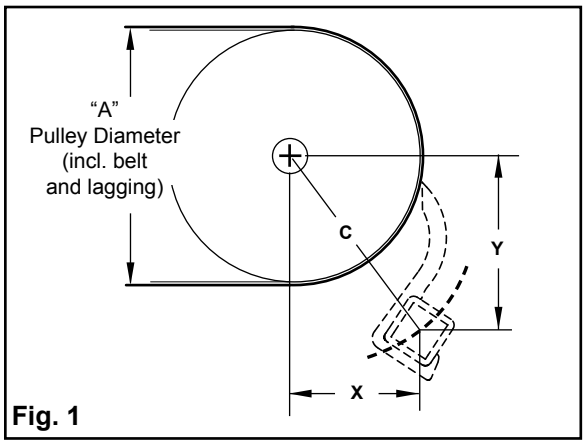

Fig. 1

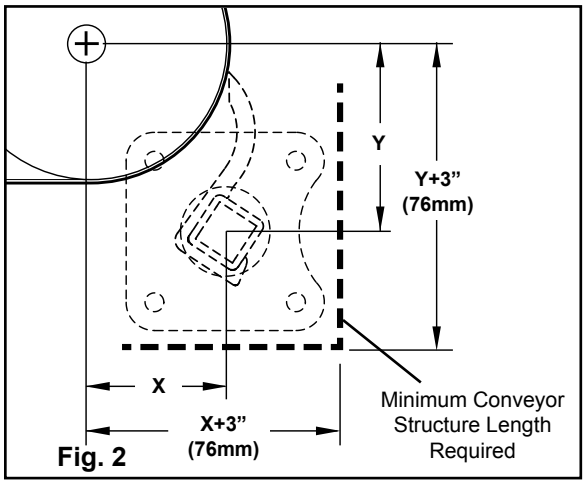

Fig. 2

3. On both sides of the pulley, ensure that the conveyor structure extends downward from the centerline of the pulley shaft the distance Y + 3" and that it extends horizontally from the centerline of the pulley shaft the distance X + 3". If there is not adequate conveyor structure, go to step 4 below. If the structure is adequate, skip to Section 4 – Installation Instructions.
4. Add the required amount of structure to the conveyor so that it extends to the Y + 3" and X + 3" dimensions from the centerline of the pulley shaft. **Note:** A minimum of three mounting bolts are required if bolting belt cleaner to structure.
5. Proceed to Section 4 – Installation Instructions.

FGP Food Grade Precleaner Installation Instructions

Caution: FGP Food Grade Precleaner Installation Instructions – If your process or product may be adversely affected by contamination from the use of this belt cleaner, it is the user's responsibility to take the steps necessary to prevent contamination.

Tools Required

- Tape measure
- 13 mm (½") combination wrench
- 16 mm (5⁄8") combination wrench
- Ratchet with 13 mm (½") socket
- Marking pen or soapstone
- 26 mm (1") wrench
- Cutting torch or 44 mm (1.75") diameter hole saw
- Welder (optional)

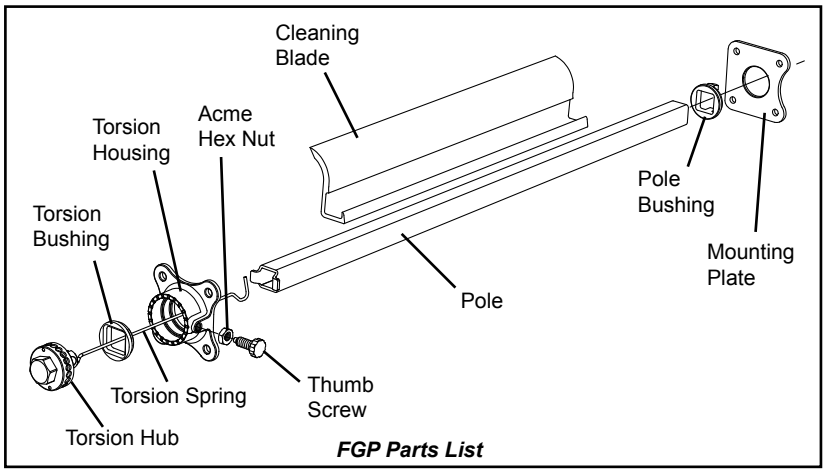

FGP Parts List

PHYSICALLY LOCK OUT AND TAG THE CONVEYOR AT THE POWER SOURCE BEFORE YOU BEGIN CLEANER INSTALLATION.

Pre-Installation

- Unpack belt cleaner from packaging
- Disassemble belt cleaner (see Parts List drawing above)
- Verify that correct size cleaner has been ordered
- Verify that all parts are included

Chart B: Pole Lengths

Pole Length		Standard Blade Length		Minimum Blade Length		Minimum Conveyor Width at Cleaner Mounting Location		Maximum Conveyor Width at Cleaner Mounting Location	
mm	in.	mm	in.	mm	in.	mm	in.	mm	in.
610	24	305	12	229	9	279	11	556	22
813	30	457	18	229	9	356	14	708	28
965	36	610	24	229	9	508	20	861	34
1067	42	813	30	457	18	660	26	1013	40
1219	48	965	36	457	18	813	32	1165	46
1372	54	1067	42	457	18	965	38	1318	52
1524	60	1219	48	457	18	1118	44	1470	58
1676	66	1372	54	457	18	1270	50	1623	64
1829	72	1524	60	457	18	1422	56	1775	70

Installation Instructions

1. Measure outside structure width where cleaner will be mounted.
2. Measure belt cleaner pole length. Minimum pole length is structure width + 50 mm (2") (Chart B).
3. From center of pulley shaft measure down the distance of Y dimension and place a mark on structure (Fig. 1).
4. From Y location mark, measure away from the pulley the distance of X dimension and mark this position. This will be the location of center of pole (Fig 1). Measure the C dimension to verify that it is correct.
5. Using the same X, Y, C dimensions repeat steps 2-4 on opposite side.

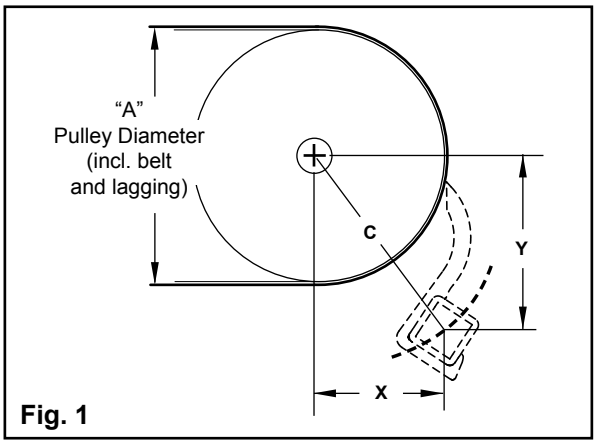

Fig. 1

6. If mounting cleaner with supplied bolts, mark location of bolt holes per Fig. 3. The bolt holes need not be positioned at 10, 2, 5 and 7 o'clock. For ease of installation or as conditions require, bolt hole positions may be rotated about the pole centerline.
7. On each side of the conveyor structure, cut a 44 mm (1.75") diameter hole around the marks that locate the center of the pole (Fig. 3).
8. If mounting cleaner using supplied bolting, drill four 8 mm (5/16") bolt holes per the bolt hole diagram (Fig. 3).
9. Clean up or remove any metal shavings or burrs created during the cutting/drilling of the pole and mounting bolt holes.
10. Determine which side of the conveyor has sufficient clearance to insert the cleaner pole. A horizontal distance of pole length + 152 mm (6") is required. Attach the Torsion Housing to the outside of the conveyor structure using one of the following options:
    a. With standoff hardware (Fig 4).
    b. Without standoff hardware – flush mount (Fig 5).
    c. Welded per local food application guidelines.

Note: If using flush mount method, a bead of food grade silicone should be applied on the bottom side of the torsion housing and the mounting plate (Fig 5).

11. Attach opposite side mounting plate per the option selected above.

Caution: It is the responsibility of the user to ensure that the mounting method is in compliance with your company's policies and any applicable legal or regulatory requirements.

12. Install torsion bushing on pole (Fig 6).
13. Position pole through torsion housing and through mounting plate bushing on opposite side (Fig 7).

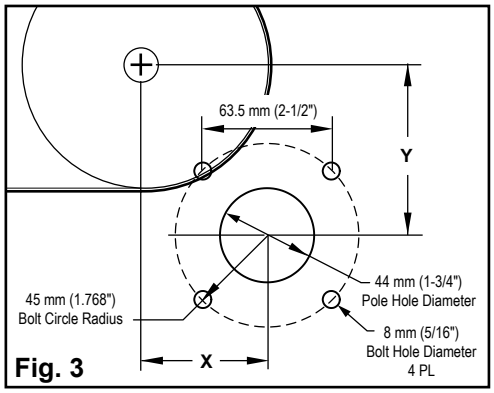

Fig. 3

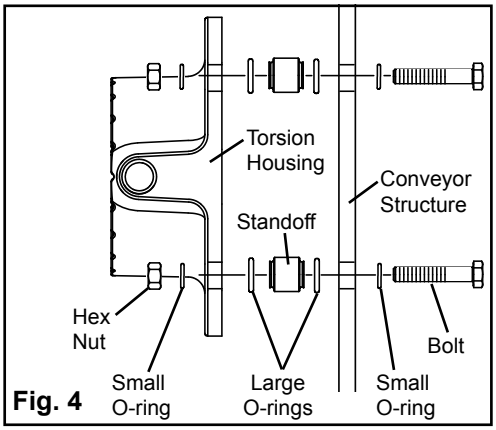

Fig. 4

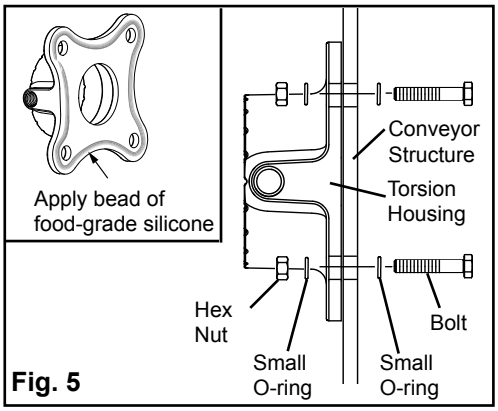

Fig. 5

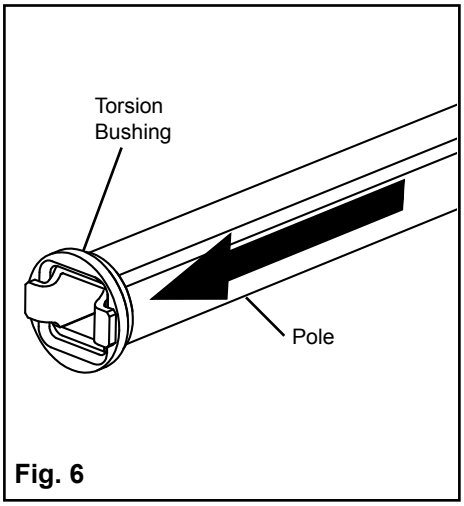

Fig. 6

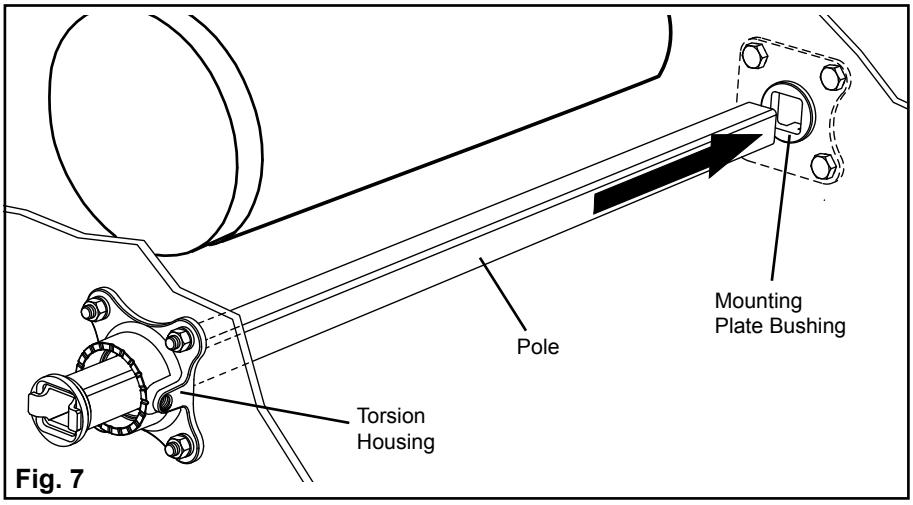

Fig. 7

14. Use included C-Dimension verification gauge to check for proper pole location (Fig. 8; Chart C).
- **a.** Snap gauge onto pole at one end of head pulley so that outside edge of gauge is as close to belt as possible without touching the belt.
- **b.** Rotate pole toward head pulley until gauge makes contact with belt.
- **c.** The point on gauge where contact is made with belt indicates the measurement for gap between pole centerline and face of the belt/pulley. (The gap dimension is equal to C dimension minus radius of pulley.)
- **d.** Verify that measured gap dimension is equal to gap dimension in Chart C for your pulley size.
- **e.** Repeat measurement at other end of head pulley. Adjust position of pole as necessary to get required C dimension.

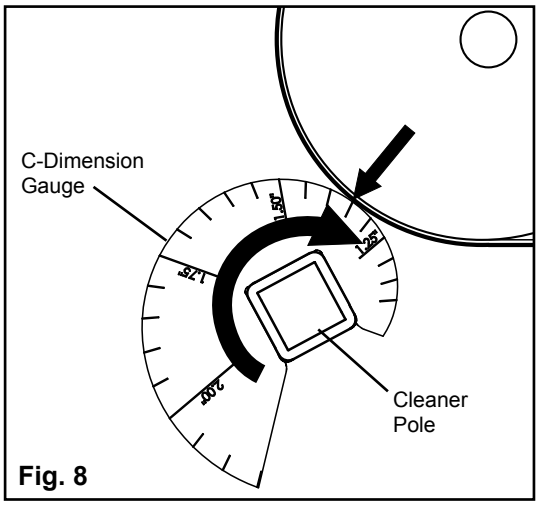

Fig. 8

Chart C: Gap

Pulley Diameter (Inches)		Gap Dimension (C-Dim Gauge)		Pulley Diameter (Inches)		Gap Dimension (C-Dim Gauge)	
mm	in.	mm	in.	mm	in.	mm	in.
51	2.0	54	2.13	165	6.5	35	1.39
64	2.5	51	2.00	178	7.0	34	1.35
76	3.0	48	1.89	191	7.5	33	1.31
89	3.5	46	1.80	203	8.0	32	1.27
102	4.0	43	1.71	216	8.5	31	1.23
114	4.5	41	1.63	229	9.0	30	1.20
127	5.0	40	1.56	241	9.5	30	1.17
140	5.5	38	1.50	254	10.0	29	1.14
152	6.0	37	1.45	267	10.5	28	1.12

15. Attach loop end of Torsion Spring to Torsion Hub pin location (Fig. 9).

16. Insert assembled Torsion Hub with Torsion Spring into Torsion Housing and Pole until Torsion Hub is flush with Torsion Housing (Fig. 10).

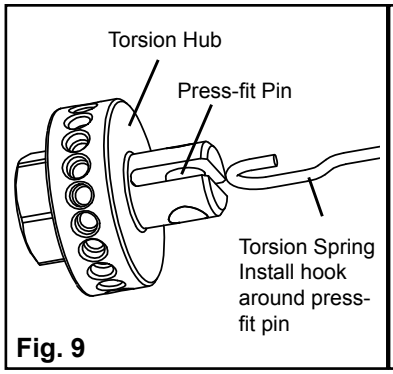

Fig. 9

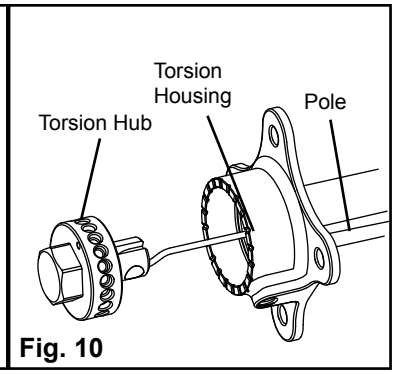

Fig. 10

17. Using a band saw or circular saw, cut Cleaning Blade to desired width. Deburr cut edge of blade as necessary.
- **a.** For general purpose cleaner Flexco recommendation is belt width minus 25 mm (1").
- **b.** For cleaning abrasive materials such as sugar and frosting, Flexco recommends material path width + 75 mm (3") for total blade length.

18. Attach Cleaning Blade (Fig. 11).
- **a.** Center and locate blade so that bottom lip engages with pole.
- **b.** Using an adjustable wrench, rotate pole in the direction of the head pulley. Do not rotate the torsion hub as this may damage the spring.
- **c.** Use hand to help snap blade to pole while rotating pole.

Note: When installing longer blades, it may be helpful to attach the blade starting at one end and work down the pole, engaging small lengths as you go.

19. Tension Cleaning Blade to conveyor belt by rotating the Torsion Hub towards the head pulley until blade is making contact with belt and light tension is felt in Torsion Hub (Fig. 12).

20. Rotate the Torsion Hub farther to the desired number of notches for tension pre-set. One to three notches is a typical pre-set tension (Fig. 13).

21. While holding Torsion Hub in tension pre-set position, tighten thumb screw ensuring that the location pin engages into Torsion Hub hole (Fig. 14).

22. Test run conveyor.

23. Loosen thumb screw and adjust tension as required for application.

Caution: Do not over-tension the cleaner blade as this may damage the cleaner. For cleaners up to 305 mm rotate hub no more than 7 notches and up to 8 notches for cleaners over 305 mm.

24. When desired tension is achieved, tighten thumb screw and jam nut (Fig. 14).

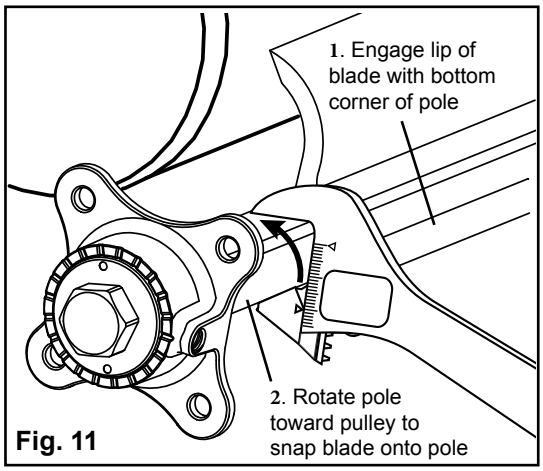

Fig. 11

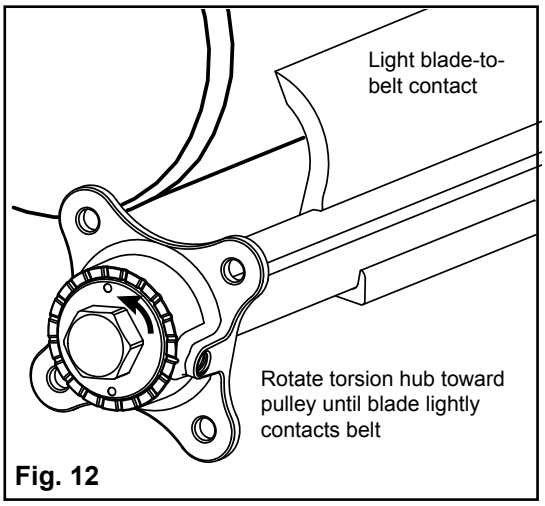

Fig. 12

NOTICE:
Cleaner has not been sanitized and must be cleaned and sanitized prior to use.

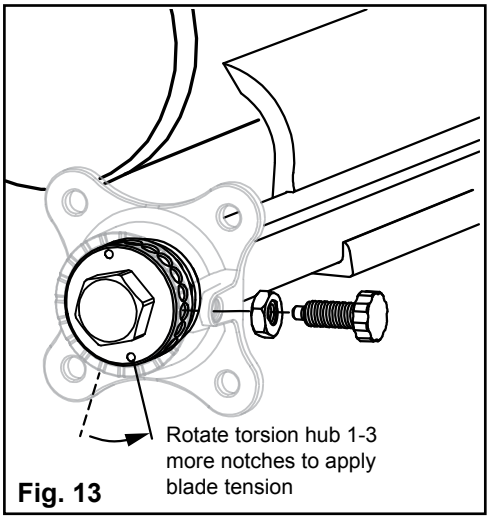

Fig. 13

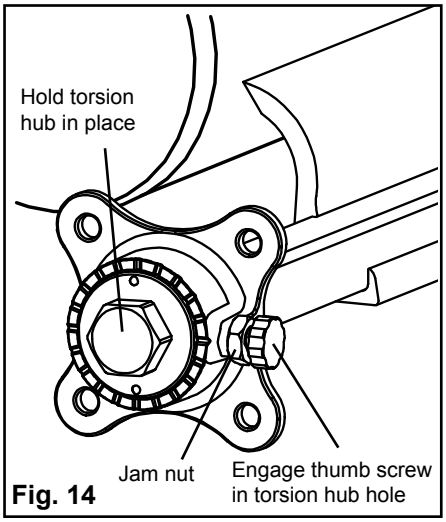

Fig. 14

Section 5 - Pre-Operation Checklist and Testing

5.1 Pre-Op Checklist

- Recheck that all fasteners are tightened properly.
- Check the blade location on the belt.
- Be sure that all installation materials and tools have been removed from the belt and the conveyor area.

5.2 Test Run the Conveyor

- Run the conveyor for at least 15 minutes and inspect the cleaning performance.
- If performance is inadequate, loosen jam nut and thumb screw.
- Rotate Torsion Hub to adjust tension as is required for application. Do not over tension the spring. Rotate the hub no more than 7 notches for cleaners up to 813 mm and 8 notches for cleaners over 813 mm.
- Tighten thumb screw and jam nut.

NOTE: Observing the cleaner when it is running and performing properly will help to detect problems or when adjustments are needed.

Section 6 - Maintenance

Flexco belt cleaners are designed to operate with minimum maintenance. However, to maintain superior performance some service is required. When the cleaner is installed a regular maintenance program should be set up. This program will ensure that the cleaner operates at optimal efficiency and problems can be identified and fixed before the cleaner stops working.

All safety procedures for inspection of equipment (stationary or operating) must be observed. The FGP Precleaner operates at the discharge end of the conveyor and is in direct contact with the moving belt. Only visual observations can be made while the belt is running. Service tasks can be done only with the conveyor stopped and the correct lockout/tagout procedures observed.

6.1 New Installation Inspection

After the new cleaner has run for a few days a visual inspection should be made to ensure the cleaner is performing properly. Make adjustments as needed.

To ensure optimal cleaner performance, keep blade and pole free of product buildup.

6.2 Routine Visual Inspection (every 2-4 weeks)

A visual inspection of the cleaner and belt can determine:

- If the belt looks clean or if there are areas that are dirty.
- If the blade is worn out and needs to be replaced.
- If there is damage to the blade or other cleaner components.
- If fugitive material is built up on the cleaner.
- If there is cover damage to the belt.
- If there is vibration or bouncing of the cleaner on the belt.
- If a snub pulley is used, a check should be made for material buildup on the pulley.

If any of the above conditions exist, a determination should be made on when the conveyor can be stopped for cleaner maintenance.

6.3 Routine Physical Inspection (every 6-8 weeks)

When the conveyor is not in operation and is properly locked and tagged out, conduct a physical inspection of the cleaner to perform the following tasks:

- Clean material buildup off of the cleaner blade and pole.
- Closely inspect the blade for wear and any damage. Replace if needed.
- Ensure full blade to belt contact.
- Inspect the cleaner pole for damage.
- Inspect all fasteners for tightness and wear. Tighten or replace as needed.
- Replace any worn or damaged components.
- If blade flash occurs remove as needed.
- Check the tension of the cleaner blade to the belt. Adjust the tension if necessary. Do not over tension the spring. Rotate the hub no more than 7 notches for cleaners up to 813 mm and 8 notches for cleaners over 813 mm.
- When maintenance tasks are completed, test run the conveyor to ensure the cleaner is performing properly.

6.4 Cleaning Instructions

Remove cleaner blade, thumb screw and jam nut, torsion hub and spring, pole and pole mounting bushings. Clean and sanitize as required. Reassemble. Reset tension.

6.5 Blade Wear Inspection

Note: Belt type, belt speed, material being conveyed, installation and other application factors will affect blade wear.

LARGE BLADE

Pulley Diameter		Max Wear Measurement on Gauge	Blade Tip to Square Pole Corner Measurement	
mm	in.		mm	in.
51	2	0.41	58	2.27
64	2.5	0.49	55	2.18
76	3	0.56	53	2.10
89	3.5	0.62	52	2.04
102	4	0.68	50	1.98
114	4.5	0.73	49	1.92
127	5	0.77	48	1.88
140	5.5	0.81	47	1.84
152	6	0.84	46	1.80
165	6.5	0.88	45	1.76
178	7	0.90	44	1.74
191	7.5	0.93	43	1.71
203	8	0.95	43	1.69
216	8.5	0.98	42	1.66
229	9	0.99	42	1.64
241	9.5	1.01	41	1.62
254	10	1.03	41	1.60
267	10.5	1.04	40	1.59
279	11	1.06	40	1.58

Note: Maximum wear for dual durometer blade is 0.75 gauge measurement or 48 mm (1.90") from blade tip to square pole corner.

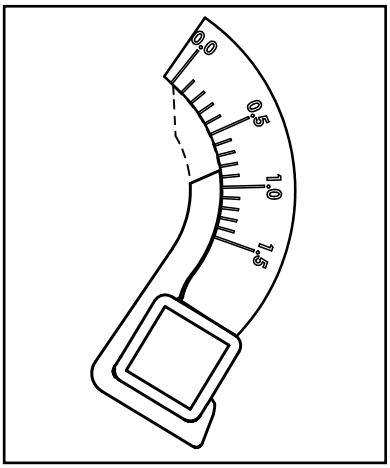

Blade Wear Measurement Using Gauge (see below) - Blade tip to top surface of pole

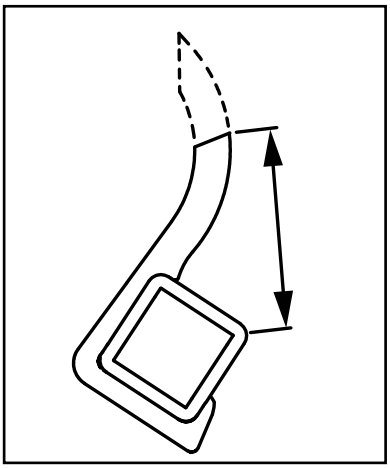

Blade Wear Measurement Using Tape Measure - Blade tip to corner of pole

Blade wear can be measured either by using a tape measure to determine the dimension from the tip of the blade to the corner of the pole, or by using the blade wear gauge (at left) by placing the end opposite the "0" mark on the flat surface of the pole and laying the gauge along the outside curve of the blade. Gauge can be copied and cut out for use.

Blade Wear Indicator Gauge
Copy and cut out for use

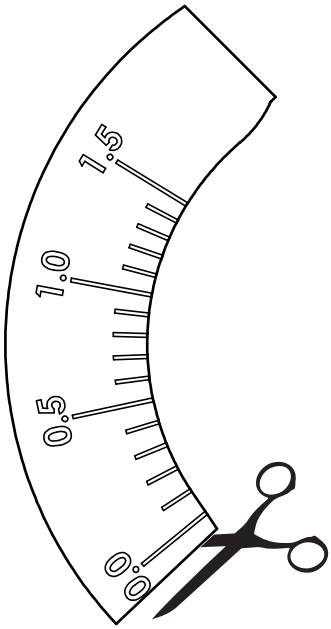

6.6 Blade Replacement Instructions

Removal of Cleaning Blade

1. Place adjustable wrench on Torsion Hub nut. Rotate away from pulley slightly to relieve force on thumb screw (Fig. 15).
2. Release the tension on the pole by unlocking the thumb screw lock nut and turning the thumb screw counterclockwise until it is free from the tension hub (Fig. 15).
3. Place the adjustable wrench on the pole, rotate pole until blade makes contact with head pulley/belt.
4. Place hand on blade, pressing blade against pulley (Fig. 16).
5. Rotate pole back while holding blade against pulley (Fig. 16).
6. Blade should snap free from belt cleaner pole.
7. Remove blade.

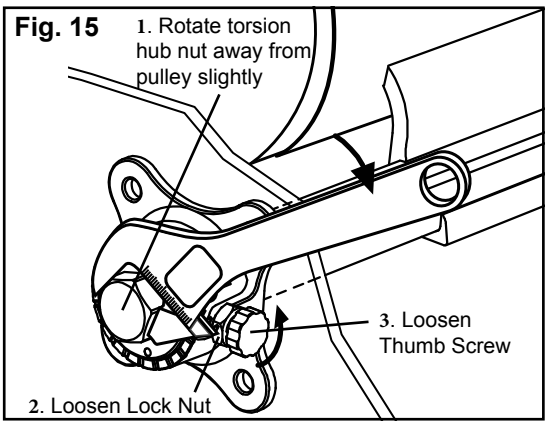

Fig. 15

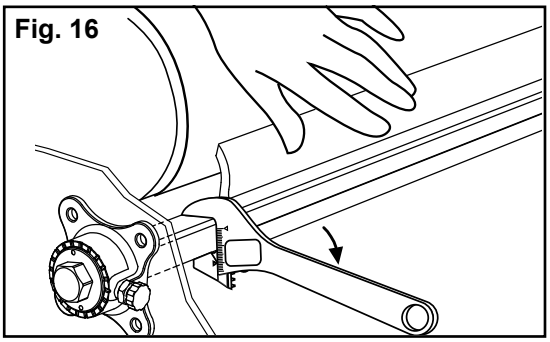
Fig. 16

Installation of Cleaning Blade

1. Insert blade up through gap between cleaner pole and head pulley/belt.
2. Center blade on belt.
3. Catch bottom lip of blade on lower front edge of belt cleaner pole (Fig. 17).
4. Rotate belt cleaner pole towards head pulley.
5. Continue to rotate pole until cleaning blade snaps onto pole.

Note: On wider belts it may be necessary to assist the blade snapping with free hand while rotating the pole towards the pulley.

6. With blade rotated against face of head pulley/belt, place wrench on tension hub and rotate in the direction of the head pulley until the hub indicator has moved the appropriate number of notches on the hub housing. Do not over tension the spring. Rotate the hub no more than 7 notches for cleaners up to 813 mm and 8 notches for cleaners over 813 mm.
7. Turn thumb screw until the location tip fully engages with the nearest hub hole location (Fig. 18).
8. Tighten lock nut on thumb screw (Fig. 18).
9. Test run conveyor and adjust cleaner tension as required.

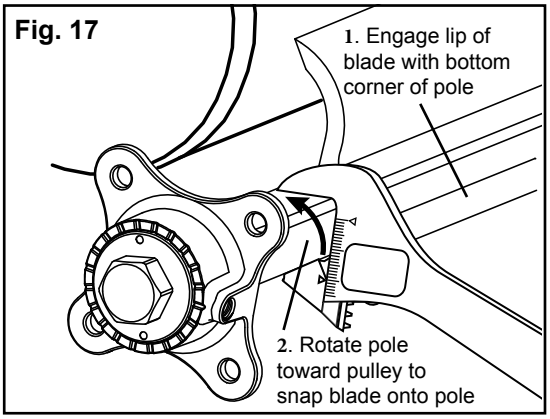

Fig. 17

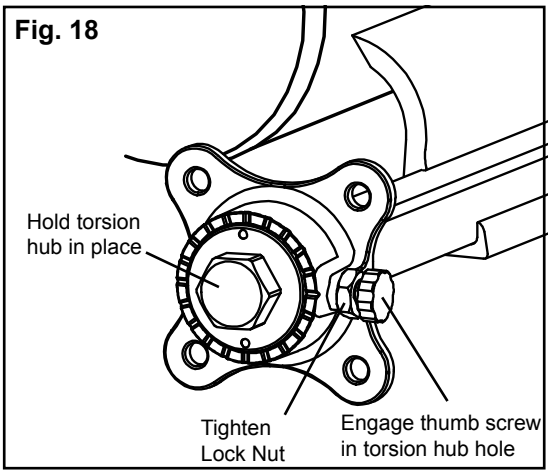

Fig. 18

6.7 Maintenance Log

Conveyor Name/No. _____

Date: _____ Work done by: _____ Service Quote # _____

Activity: _____

Date: _____ Work done by: _____ Service Quote # _____

Activity: _____

Date: _____ Work done by: _____ Service Quote # _____

Activity: _____

Date: _____ Work done by: _____ Service Quote # _____

Activity: _____

Date: _____ Work done by: _____ Service Quote # _____

Activity: _____

Date: _____ Work done by: _____ Service Quote # _____

Activity: _____

Date: _____ Work done by: _____ Service Quote # _____

Activity: _____

6.8 Cleaner Maintenance Checklist

FGP Belt Cleaner:_____ **Ordering Number:**_____

Blade Width: ☐ Belt minus 1" (25 mm) ☐ Material path plus 3" (75 mm).

Conveyor Information:

Conveyor Number:_____ Belt Condition: _____

Belt Width: ☐ 300 mm (12") ☐ 450 mm (18") ☐ 600 mm (24") ☐ 750 mm (30") ☐ 900 mm (36") ☐ 1050 mm (42") ☐ 1200 mm (48") ☐ 1350 mm (54") ☐ 1500 mm (60")

Head Pulley Diameter (Belt & Lagging): _____

Belt Speed:_____fpm Belt Thickness: _____

Belt Splice:_____ Condition of Splice:_____ Number of splices:_____ ☐ Skived ☐ Unskived

Material conveyed: _____

Days per week run:_____ Hours per day run:_____

Blade Life::

Date blade installed:_____ Date blade inspected:_____ Estimated blade life:_____

Is blade making complete contact with belt? ☐ Yes ☐ No

Blade height: Left _____ Middle _____ Right _____

Blade condition: ☐ Good ☐ Grooved ☐ Smiled ☐ Not contacting belt ☐ Damaged

Was Cleaner Adjusted: ☐ Yes ☐ No

Pole Condition: ☐ Good ☐ Bent ☐ Worn

Lagging: ☐ Slide lag ☐ Ceramic ☐ Rubber ☐ Other ☐ None

Condition of lagging: ☐ Good ☐ Bad ☐ Other_____

Cleaner's Overall Performance: (Rate the following 1 - 5, 1 = very poor - 5 = very good)

Appearance: ☐ Comments:_____

Location: ☐ Comments:_____

Maintenance: ☐ Comments:_____

Performance: ☐ Comments:_____

Other Comments:_____

_____

_____

_____

_____

_____

Section 7 - Troubleshooting

Problem	Possible Cause	Possible Solutions
Poor cleaning performance	Excessive build-up on cleaner	Inspect blade, bushings and pole for material buildup
	Cleaner under-tensioned	Increase tension incrementally and reevaluate
	Cleaner over-tensioned	Decrease tension incrementally and reevaluate
	Cleaner installed in wrong location	Verify “C” dimension, relocate to correct dimension
	Cleaner blade worn or damaged	Replace cleaner blade
Rapid Blade Wear	Excessive build-up on cleaner	Inspect blade, bushings and pole for material buildup
	Cleaner under-tensioned	Increase tension incrementally and reevaluate
	Cleaner over-tensioned	Decrease tension incrementally and reevaluate
	Cleaner installed in wrong location	Verify “C” dimension, relocate to correct dimension
	Excessively abrasive material	More frequent blade adjustment and replacement may be necessary
	Mechanical splice damaging blade	Repair, skive or replace splice
Excessive center wear on blade (smile effect)	Blade wider than material path	Replace blade with width appropriate for material path
	Cleaner under-tensioned	Increase tension incrementally and reevaluate
	Cleaner over-tensioned	Decrease tension incrementally and reevaluate
Unusual wear, flash or damage to blade	Excessive build-up on cleaner	Inspect blade, bushings and pole for material buildup
	Mechanical splice damaging blade	Repair, skive or replace splice
	Belt damaged or ripped	Repair or replace belt
	Cleaner installed in wrong location	Verify “C” dimension, relocate to correct dimension
	Damage to pulley or pulley lagging	Repair or replace pulley or lagging
Vibration or noise	Excessive build-up on cleaner	Inspect blade, bushings and pole for material buildup
	Cleaner installed in wrong location	Verify “C” dimension, relocate to correct dimension
	Cleaner under-tensioned	Increase tension incrementally and reevaluate
	Cleaner over-tensioned	Decrease tension incrementally and reevaluate
	Cleaner mounting not secure	Check and tighten all bolts and nuts
	Cleaner not square to head pulley	Verify “C” dimension, relocate to correct dimension
	Material build-up in chute	Remove build-up on cleaner and in chute
	Using dual durometer blade on dry belt	Change to UHMW blade
Cleaner being pushed away from pulley	Excessive build-up on cleaner	Inspect blade, bushings and pole for material buildup
	Cleaner under-tensioned	Increase tension incrementally and reevaluate
	Cleaner over-tensioned	Decrease tension incrementally and reevaluate
	Sticky material is overburdening cleaner	Increase tension incrementally and reevaluate
	Cleaner not set up correctly	Confirm location dimensions are equal on both sides

Section 8 - Specs and CAD Drawings

8.1 Specs and Guidelines

Pole Lengths

Pole Length		Standard Blade Length		Minimum Blade Length		Minimum Conveyor Width at Cleaner Mounting Location		Maximum Conveyor Width at Cleaner Mounting Location	
mm	in.	mm	in.	mm	in.	mm	in.	mm	in.
610	24	305	12	229	9	279	11	556	22
813	30	457	18	229	9	356	14	708	28
965	36	610	24	229	9	508	20	861	34
1067	42	813	30	457	18	660	26	1013	40
1219	48	965	36	457	18	813	32	1165	46
1372	54	1067	42	457	18	965	38	1318	52
1524	60	1219	48	457	18	1118	44	1470	58
1676	66	1372	54	457	18	1270	50	1623	64
1829	72	1524	60	457	18	1422	56	1775	70

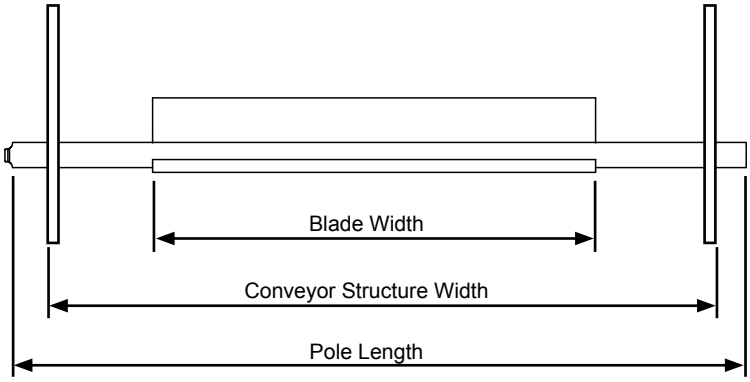

Pole Location

A		X		Y		C	
mm	in.	mm	in.	mm	in.	mm	in.
51	2.0	24	0.95	76	2.98	80	3.13
64	2.5	30	1.19	77	3.03	83	3.25
76	3.0	37	1.44	78	3.08	86	3.39
89	3.5	43	1.68	79	3.12	90	3.55
102	4.0	49	1.93	81	3.17	94	3.71
114	4.5	55	2.18	82	3.22	99	3.88
127	5.0	61	2.42	83	3.27	103	4.06
140	5.5	68	2.67	84	3.31	108	4.25
152	6.0	74	2.91	85	3.36	113	4.45
165	6.5	80	3.16	87	3.41	118	4.64
178	7.0	86	3.40	88	3.46	123	4.85
191	7.5	93	3.65	89	3.51	129	5.06
203	8.0	99	3.89	90	3.55	134	5.27
216	8.5	105	4.14	91	3.60	139	5.48
229	9.0	111	4.38	93	3.65	145	5.70
241	9.5	118	4.63	94	3.70	150	5.92
254	10.0	124	4.88	95	3.74	156	6.14

A = Diameter of pulley + lagging thickness + belt thickness
C = Centerline of pulley to centerline of cleaner pole.

Pole Location Specs

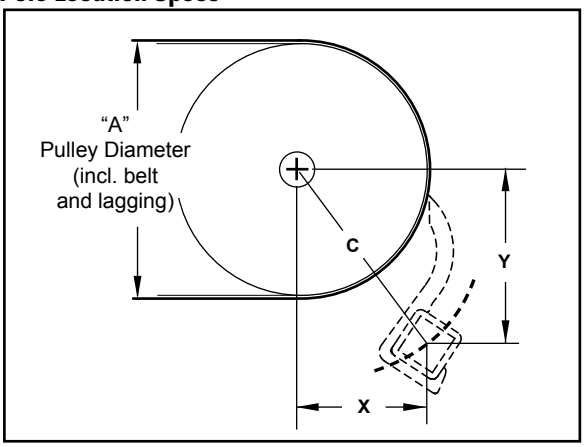

Specifications:

Temperature Range	UHMW: -29°C to 60°C (-20°F to 140°F)
	Dual Durometer: 0°C to 60°C (+32°F to 140°F)
Pulley Diameter Range	267 mm (10.5") to 50 mm (2")
Blade Height	76 mm (3.0")
Usable Blade Wear Length (pulley size dependent)	50-66 mm (2" - 2.6")
Blade Width Range	102-1524 mm (4" - 60")
Blade Material	Food-grade UHMW, UHMW with Stainless Steel, or Urethane with PVC
Blade Hardness	UHMW: 63D Shore Hardness
	Urethane: 85A Shore Hardness
Pole/Mounting Material	304 Stainless Steel

8.2 CAD Drawing - Food Grade Precleaner with Blue or White Blade

White Blade

ASSY NUMBER	BLADE WIDTH	ITEM "A"	ITEM "B"
56009	305 mm (12")	56540	56503
56010	457 mm (18")	56541	56504
56011	610 mm (24")	56542	56505
56012	762 mm (30")	56543	56506
56013	914 mm (36")	56544	56507
56014	1067 mm (42")	56545	56508
56015	1219 mm (48")	56546	56509
56016	1372 mm (54")	56547	56510
56017	1524 mm (60")	56548	56511

Blue Blade

ASSY NUMBER	BLADE WIDTH	ITEM "A"	ITEM "B"
56000	305 mm (12")	56531	56503
56001	457 mm (18")	56532	56504
56002	610 mm (24")	56533	56505
56003	762 mm (30")	56534	56506
56004	914 mm (36")	56535	56507
56005	1067 mm (42")	56536	56508
56006	1219 mm (48")	56537	56509
56007	1372 mm (54")	56538	56510
56008	1524 mm (60")	56539	56511

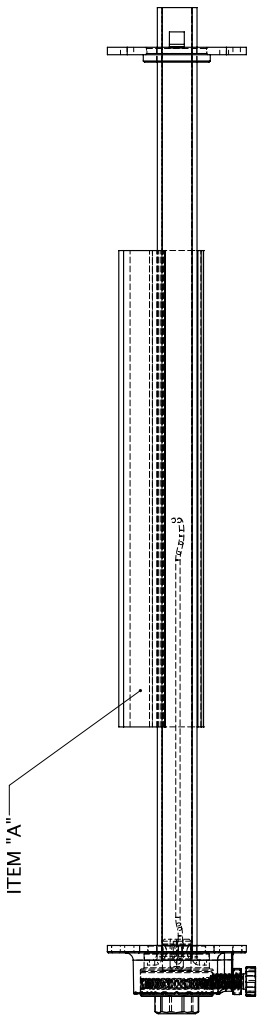

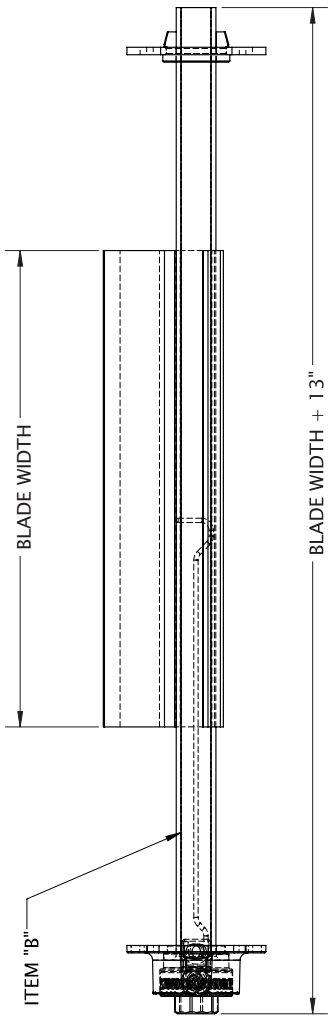

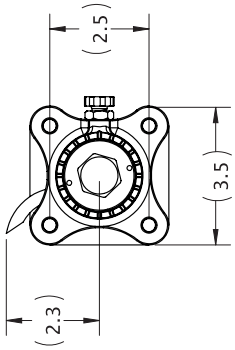

8.3 CAD Drawing - Food Grade Precleaner with Metal Detectable Blade or Dual Durometer Blade

Blue Metal Detectable Blade

ASSY NUMBER	BLADE WIDTH	ITEM "A"	ITEM "B"
56027	305 mm (12")	56558	56503
56028	457 mm (18")	56559	56504
56029	610 mm (24")	56560	56505
56030	762 mm (30")	56561	56506
56031	914 mm (36")	56562	56507
56032	1067 mm (42")	56563	56508
56033	1219 mm (48")	56564	56509
56034	1372 mm (54")	56565	56510
56035	1524 mm (60")	56566	56511

Blue Dual Durometer Blade with Metal Detectable Tip

ASSY NUMBER	BLADE WIDTH	ITEM "A"	ITEM "B"
56018	305 mm (12")	56549	56503
56019	457 mm (18")	56550	56504
56020	610 mm (24")	56551	56505
56021	762 mm (30")	56552	56506
56022	914 mm (36")	56553	56507
56023	1067 mm (42")	56554	56508
56024	1219 mm (48")	56555	56509
56025	1372 mm (54")	56556	56510
56026	1524 mm (60")	56557	56511

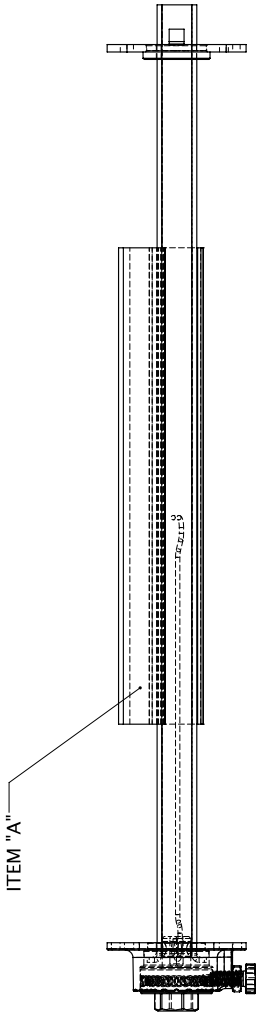

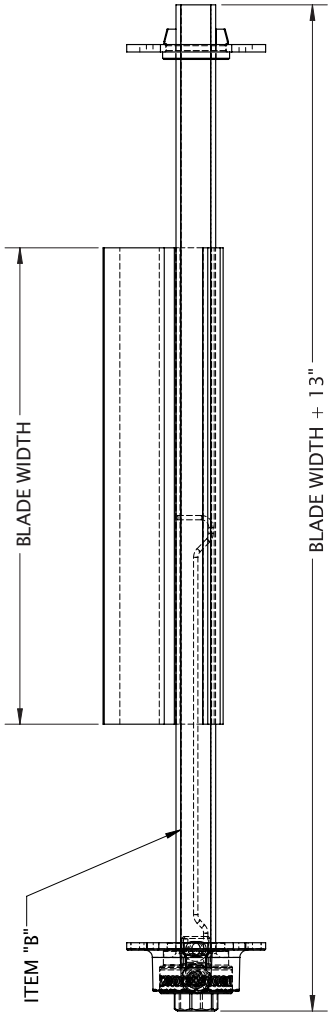

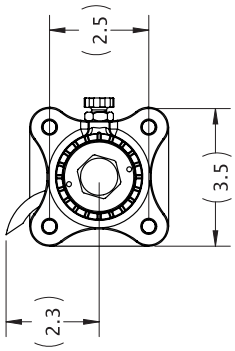

Section 9 - Replacement Parts

9.1 Replacement Parts List

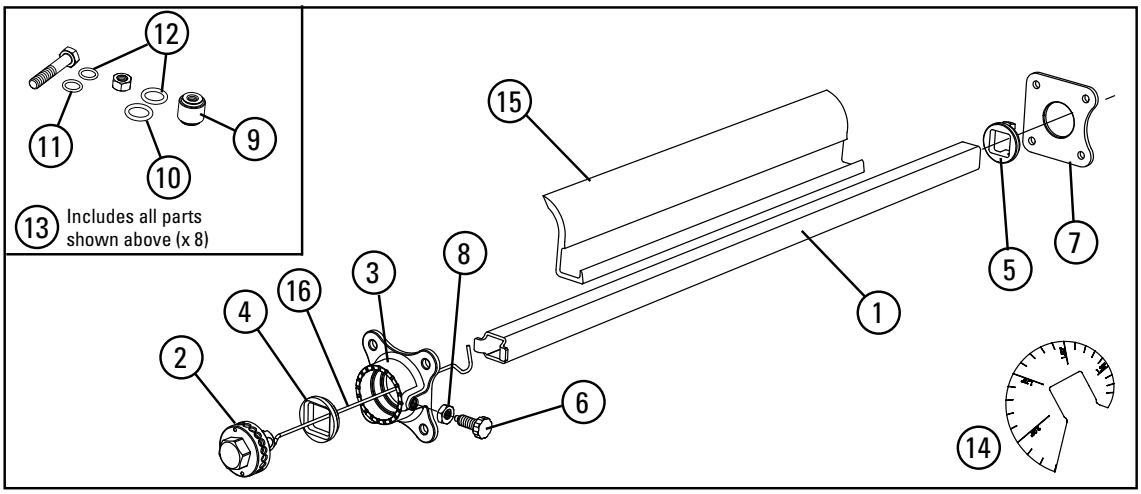

Replacement Parts

REF	DESCRIPTION	ORDERING NUMBER	ITEM CODE	WT. LBS.
1	610 mm (24") Pole	FGPL-24/610	56503	2.7
	762 mm (30") Pole	FGPL-30/762	56504	3.4
	914 mm (36") Pole	FGPL-36/914	56505	4.1
	1067 mm (42") Pole	FGPL-42/1067	56506	4.8
	1219 mm (48") Pole	FGPL-48/1219	56507	5.5
	1372 mm (54") Pole	FGPL-54/1372	56508	6.2
	1524 mm (60") Pole	FGPL-60/1524	56509	6.9
	1676 mm (66") Pole	FGPL-66/1676	56510	7.6
	1829 mm (72") Pole	FGPL-72/1829	56511	8.3
2	Torsion Hub Assembly	FGTHUB	56519	0.6
3	Torsion Housing	FGTHSG	56520	0.8
4	Torsion Bushing	FGTBSG	56521	0.1
5	Pole Bushing	FGPBSG	56522	0.1
6	Thumb Screw	FGPIN	56523	0.1
7	End Plate	FGENDPLT	56524	0.5
8	Jam/Locking Nut	FGHEXNUT	56525	0.1
9	Standoff Kit (8 pc)	FGSTNDOFFKIT/8	56526	0.6
	Standoff (1 pc)	FGSTNDOFFKIT/1	56529	0.1
10	Large O-ring (1 pc)	FGO-RLG/1	56530	0.1
11	Small O-ring (1 pc)	FGO-RSM/1	56567	0.1
12	O-ring Kit (16 pcs. ea. Items 10 & 11)	FGO-RGKIT/32	56528	0.1
13	Hardware Kit	FGHRDWRKIT	56527	1.1
14	"C" Dimension Gauge	FG-C-GAUGE	56568	0.1

Replacement Springs

REF	DESCRIPTION	ORDERING NUMBER	ITEM CODE	WT. LBS.
16	Torsion Spring 152 mm (6") to 305 mm (12") Blades	FGTS-20/500	56500	0.1
	Torsion Spring 330 mm (13") to 610 mm (24") Blades	FGTS-36/900	56501	0.1
	Torsion Spring 635mm (25") to 1219 mm (48") Blades	FGTS-60/1500	56502	0.1
	Torsion Spring 1245 mm (49") to 1524 mm (60") Blades	FGTS-XL	56577	0.2

Replacement Blades

REF	DESCRIPTION	ORDERING NUMBER	ITEM CODE	WT. LBS.
15	305 mm (12") Blue Blade	FGB-BL3-12/305	56531	0.5
	457 mm (18") Blue Blade	FGB-BL3-18/457	56532	0.7
	610 mm (24") Blue Blade	FGB-BL3-24/610	56533	0.9
	762 mm (30") Blue Blade	FGB-BL3-30/762	56534	1.2
	914 mm (36") Blue Blade	FGB-BL3-36/914	56535	1.4
	1067 mm (42") Blue Blade	FGB-BL3-42/1067	56536	1.6
	1219 mm (48") Blue Blade	FGB-BL3-48/1219	56537	1.8
	1372 mm (54") Blue Blade	FGB-BL3-54/1372	56538	2.1
	1524 mm (60") Blue Blade	FGB-BL3-60/1524	56539	2.3
	305 mm (12") White Blade	FGB-W3-12/305	56540	0.5
	457 mm (18") White Blade	FGB-W3-18/457	56541	0.7
	610 mm (24") White Blade	FGB-W3-24/610	56542	0.9
	762 mm (30") White Blade	FGB-W3-30/762	56543	1.2
	914 mm (36") White Blade	FGB-W3-36/914	56544	1.4
	1067 mm (42") White Blade	FGB-W3-42/1067	56545	1.6
	1219 mm (48") White Blade	FGB-W3-48/1219	56546	1.8
	1372 mm (54") White Blade	FGB-W3-54/1372	56547	2.1
	1524 mm (60") White Blade	FGB-W3-60/1524	56548	2.3
	305 mm (12") Dual Durometer Blade	FGB-MDDD3-12/305	56549	0.5
	457 mm (18") Dual Durometer Blade	FGB-MDDD3-18/457	56550	0.7
	610 mm (24") Dual Durometer Blade	FGB-MDDD3-24/610	56551	0.9
	762 mm (30") Dual Durometer Blade	FGB-MDDD3-30/762	56552	1.2
	914 mm (36") Dual Durometer Blade	FGB-MDDD3-36/914	56553	1.4
	1067 mm (42") Dual Durometer Blade	FGB-MDDD3-42/1067	56554	1.6
	1219 mm (48") Dual Durometer Blade	FGB-MDDD3-48/1219	56555	1.8
	1372 mm (54") Dual Durometer Blade	FGB-MDDD3-54/1372	56556	2.1
	1524 mm (60") Dual Durometer Blade	FGB-MDDD3-60/1524	56557	2.3
	305 mm (12") Metal Detectable Blade	FGB-MD3-12/305	56558	0.5
	457 mm (18") Metal Detectable Blade	FGB-MD3-18/457	56559	0.7
	610 mm (24") Metal Detectable Blade	FGB-MD3-24/610	56560	0.9
	762 mm (30") Metal Detectable Blade	FGB-MD3-30/762	56561	1.2
	914 mm (36") Metal Detectable Blade	FGB-MD3-36/914	56562	1.4
	1067 mm (42") Metal Detectable Blade	FGB-MD3-42/1067	56563	1.6
	1219 mm (48") Metal Detectable Blade	FGB-MD3-48/1219	56564	1.8
	1372 mm (54") Metal Detectable Blade	FGB-MD3-54/1372	56565	2.1
	1524 mm (60") Metal Detectable Blade	FGB-MD3-60/1524	56566	2.3

NOTE: Equipping an FGP with a replacement dual durometer blade will void EU 1935/2004 compliance.

UNITED STATES DEPARTMENT OF AGRICULTURE
MARKETING AND REGULATORY PROGRAMS
AGRICULTURAL MARKETING SERVICE

EQUIPMENT ACCEPTANCE CERTIFICATE

Firm:

Flexco
1995 Oak Industrial Drive, North East
Grand Rapids, Michigan, 49505

Model Designation:

Belt Conveyors
Belt Cleaner
Flexco Food Grade Primary Belt Cleaner

June 18, 2014	U.S. Department of Agriculture Marketing and Regulatory Programs Agricultural Marketing Service Dairy Grading Branch 1400 Independence Ave., SW Washington, DC 20250-0230
Date of Issuance	
June 17, 2019	
Date of Expiration	

The issuance of this form is based on U.S. Department of Agriculture, Dairy Grading Branch, Equipment Design Review Section, evaluation of the equipment listed above for compliance with:

NSF/ANSI/3-A 14159-3 - 2010 Hygiene Requirements for the Design of Belt Conveyors Used in Meat ans Poultry Processing

This form does not limit USDA's responsibility to take appropriate action in cases in which evidence of non-compliance, improper maintenance, or non-sanitary conditions have been observed.

USDA United States Department of Agriculture

DA-161 (09-04) Destroy previous editions.

UNITED STATES DEPARTMENT OF AGRICULTURE
MARKETING AND REGULATORY PROGRAMS
AGRICULTURAL MARKETING SERVICE

EQUIPMENT ACCEPTANCE CERTIFICATE

Firm:

Flexco
1995 Oak Industrial Drive, North East
Grand Rapids, Michigan, 49505

Model Designation:

Belt Conveyors
Belt Cleaner
Flexco Food Grade Primary Belt Cleaner

June 18, 2014
Date of Issuance

U.S. Department of Agriculture
Marketing and Regulatory Programs
Agricultural Marketing Service
Dairy Grading Branch
1400 Independence Ave., SW
Washington, DC 20250-0230

June 17, 2019
Date of Expiration

The issuance of this form is based on U.S. Department of Agriculture, Dairy Grading Branch, Equipment Design Review Section, evaluation of the equipment listed above for compliance with:

USDA Dairy Equipment Guidelines

This form does not limit USDA's responsibility to take appropriate action in cases in which evidence of non-compliance, improper maintenance, or non-sanitary conditions have been observed.

USDA United States Department of Agriculture

DA-161 (09-04) Destroy previous editions.

FLEXCO

Partners in Productivity

EU Declaration of Compliance Statement

Product: FGP Belt pre-cleaners (white, blue and metal detectable grey versions), with UHMWPE Blades –

Assembly
56000 through 56017
56027 through 56035

Blades

56531 through 56539	Blue UHMWPE
56540 through 56548	White UHMWPE
56558 through 56566	Blue/Gray Metal Detectable UHMWPE

Intended applications: For use in contact with all food types, up to 60° C.

Framework regulation (EC) No. 1935/2004: (Applicable to all food contact materials)
The above FGP belt pre-cleaners comply with the applicable requirements of Regulation (EC) no.1935/2004 on Materials and Articles intended to come into contact with food including Article 3 (General Requirements) and Article 17 (Traceability).

Good Manufacturing Practice Regulation (EC) No. 2023/2006: (Applicable to all food contact materials)
The above products are manufactured under a quality assurance system which meets the requirements of Regulation (EC) no. 2023/2006 on Good Manufacturing Practice for materials and articles intended to come into contact with food.

Commission regulation (EU) No.10/2011 on plastic materials intended to come into contact with food:
UHMWPE plastic blades used with the pre-cleaners are in compositional compliance with EU Regulation 10/2011 including its updates 1282/2011, 1183/2012, 202/2014 and 174/2015. The metal detectable additive used in the gray blade is also listed. Colorants are suitable for use in food contact plastics.

When used as intended, levels of overall migration and specific migration of any substances subject to restriction will not exceed the legal limits (calculated as 6 dm^2 blade per 1kg of food).

This compliance statement is based on information received from material suppliers, migration testing as below undertaken according to Regulation 10/2011, migration modelling and quality control systems in place at Flexco. Supporting documents are available and can be disclosed to the competent authority on request.

1935 Oak Industrial Dr. NE • Grand Rapids, Michigan 49505 USA • Tel: 1-616-459-3196 • Fax: 1-616-459-4976 • www.flexco.com

FLEXCO

Partners in Productivity

Test Simulants	Food Types	Testing Condition
A (10% ethanol), B (3% acetic acid), D2 (Vegetable oil substitute isooctane) of Regulation No.10,2011 for Plastic Materials and Articles in contact with food	All dry, aqueous, acidic and fatty foods	OM5 2 hours at 100°C or equivalent

Dual use food additives:
No migratory dual use food additives or authorised food flavourings covered respectively by Regulation (EC) No. 1333/2008 or Regulation (EC) No. 1334/2008 or their implementing measures are understood to be used in the manufacture of the belt pre-cleaners.

Stainless Steel Components
In use of the belt pre-cleaner, the specific metal release limits of the Council of Europe (COE) Resolution CM/Res (2013) 9 on metals and alloys used in food contact materials will not be exceeded.

US FDA Compliance
The FGP Belt Pre-cleaner has been certified by the USDA for use in meat, poultry, and dairy operations. The blade material complies with US FDA 21 CFR part 177.1520 "Olefin Polymers, Specifications 2.1 and 2.1 and is suitable for use with all types of food, all conditions of use as detailed in Tables 1 and 2 of 21 CFR Part 176.170.

Additional Information

REACH (Registration, Evaluation, Authorization and Restriction of Chemicals)
The FGP belt Pre-cleaner Is not manufactured or formulated with any of the Substances of Very High Concern (SVHC) as per the European REACH candidate list as of the date of this regulatory statement.

This Declaration is for the product specified above and is valid for two years. An updated statement will be provided if the information on which the declaration is based changes or regulatory requirements impact on its validity.

10 March 2016

John H. Meulenberg, General Manager, Flexco Grand Rapids

1995 Oak Industrial Dr. NE • Grand Rapids, Michigan 49505 USA • Tel: 1-616-459-3196 • Fax: 1-616-459-4976 • www.flexco.com

Note: Units equipped with the dual durometer blade are not compliant with EU 1935/2004.

New Door No. 51 • Anna Salai, Nagalkeni • Pammal Village • Chennai - 600 044 • Tamil Nadu • India
Tel: +91-44-4856-6762 • E-mail: info.india@flexco.com

Visit **www.flexco.com** for other Flexco locations and products.

©2015 Flexible Steel Lacing Company. 02-18-19. For reorder: X4374